M series

Proportional resistive fingertip controllers • potentiometer technology



DISTINCTIVE FEATURES

One, two or three axis
Analog output
Low profile mounting depth
Friction centering option
Low profile design with multiple handle options



ENVIRONMENTAL SPECIFICATIONS

- Operating Temperature: -25 °C to +70 °C (-13 °F to +158 °F)
- Storage Temperature: -40 °C to +70 °C (-40 °F to +158 °F)

MECHANICAL SPECIFICATIONS (X & Y AXIS)

- Operating Force: 1.3 N (0.29 lbf)
- Maximum Vertical Load: 100 N (22.5 lbf)
- Maximum Horizontal Load: 100 N (22.5 lbf)
- Mechanical Angle of Movement: 56°
- Expected Life: See potentiometer options
- Mass/weight: Varies
- Lever Action (centering): Spring or friction

MECHANICAL SPECIFICATIONS (Z AXIS)

- Operating Torque: 0.040 Nm (0.35 lbf in)
- Break out Torque: 0.022 Nm (0.19 lbf in)
- Maximum Allowable Torque: 0.049 Nm (0.43 lbf in)
- Mechanical Angle of Movement: 90°
- Lever Action (centering): Spring

MATERIALS

- Body: Nylon
- Actuator: Nylon

The company reserves the right to change specifications without notice.

M series

Proportional resistive fingertip controllers • potentiometer technology

WIRING DIAGRAM

DEFAULT WIRE COLOR CODE *		
COLOR	FUNCTION	AWG
2 OR 3 AXIS JOYSTICK WITH 1 PUSHBUTTON: OPTIONS 5, E, G, H, 9, N		
Orange Orange	Switch 1 Switch Common	28
3 AXIS JOYSTICK WITH 2 PUSHBUTTONS: OPTION Q**		
Orange Brown Green	Switch 1 Switch 2 Switch Common	28
Z AXIS IN A 3 AXIS JOYSTICK: OPTION 8, 9, M, N, Q		
Red White Blue	Supply Signal Return	28

* Wires for the Z axis and the pushbuttons are 292 mm (11.5in) and stripped
** Handle Q pushbuttons are shown in the following drawing

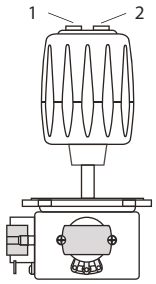

OUTPUTS

POTENTIOMETER OPTIONS

POTENTIOMETER	P	R
Electrical Element	CONDUCTIVE PLASTIC	
Track Resistance	5K	
Linearity	±1.0%	±1.0%
Track Operating Angle	220°	50°
CRV	±1.5%	±1.0%
Power Dissipation	0.25W@40 °C	1 W
Rotational Life	1,000,000	10,000,000

MOUNTING

INSTALLATION

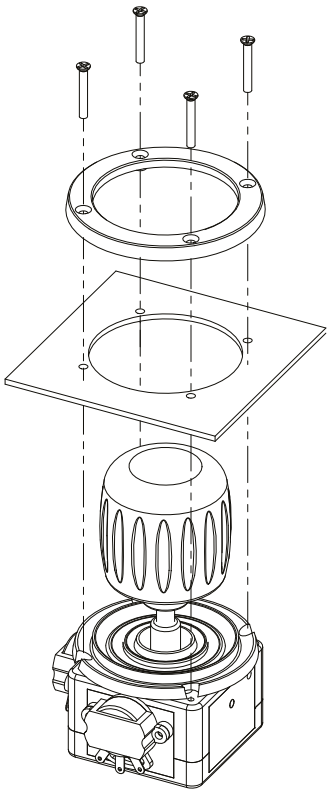

FRONT MOUNTING BEZEL (FM)



C = Split Bezel
Cutout dimensions = 39.70 mm (1.562 in)



L = Rubber Boot
Cutout dimensions = 39.70 mm (1.562 in)

REAR MOUNTING BEZEL (RM)



F = Square Bezel
Cutout dimensions = 30.15 mm (1.187 in)

MOUNTING ACCESSORIES
Standard hardware includes:
C=Ring, cup and 4 black Phl screws 2-56x 1/2 in
L=Ring and 4 black Phl screws 2-56x 1/2 in
F=Square bezel, 4 screws 2-56x1/2 in Phl and 4 screws 2-56x 1/2 in Phl

M series

Proportional resistive fingertip controllers • potentiometer technology

BUILD YOUR PART NUMBER

M		1				1	
SERIES	MODEL		MOUNTING BEZEL	CENTERING	HANDLE		OUTPUT OPTIONS POTENTIOMETERS

MODEL

1	2 Axis
2	2 Axis with pushbuttons
3	3 Axis
4	3 Axis with pushbuttons

MOUNTING BEZEL

C	Split Bezel
F	Square Bezel
L	Rubber Boot Kit

CENTERING

0	Spring Centering
6	Torque Set (Friction)

HANDLE

0	Tapered Convex
1	Concave Tip
2	Flat Tip
3	Concave Tip - Long
5	Pushbutton
6	Straight Tip - Short
8	3 Axis
9	3 Axis with pushbutton
A	Straight Tip - Mid
B	Straight Tip - Long
E	Pushbutton
G	Pushbutton
H	Pushbutton
M	3 Axis / No Pushbutton
N	3 Axis with 1 Pushbutton
Q	3 Axis with 2 Pushbuttons

OUTPUT OPTIONS POTENTIOMETERS

P	5KΩ, 220°
R	5KΩ, 50°

M series

Proportional resistive fingertip controllers • potentiometer technology

2 AXIS - OPTION A HANDLE



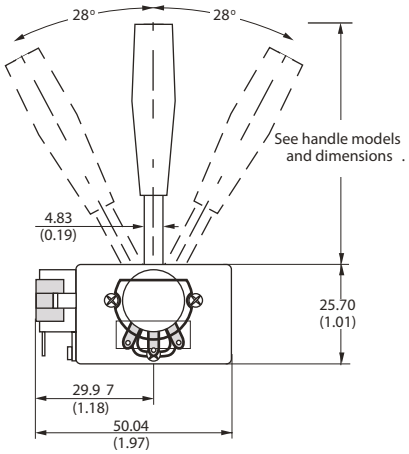

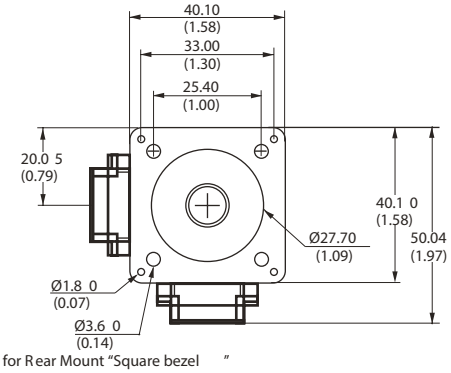

Used for R ear Mount "Square bezel "

Mechanical dimensions represent a joystick with the largest potentiometer option.
Potentiometer size will vary according to selected option

HANDLE OPTIONS

TWO AXIS

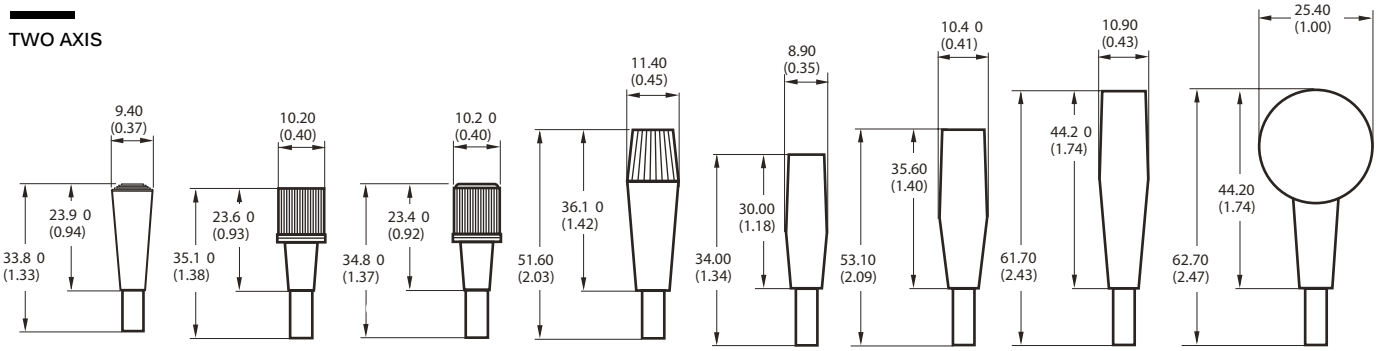

0 | 1 | 2 | 3 | 6 | A | B | C

TWO AXIS WITH PUSHBUTTONS

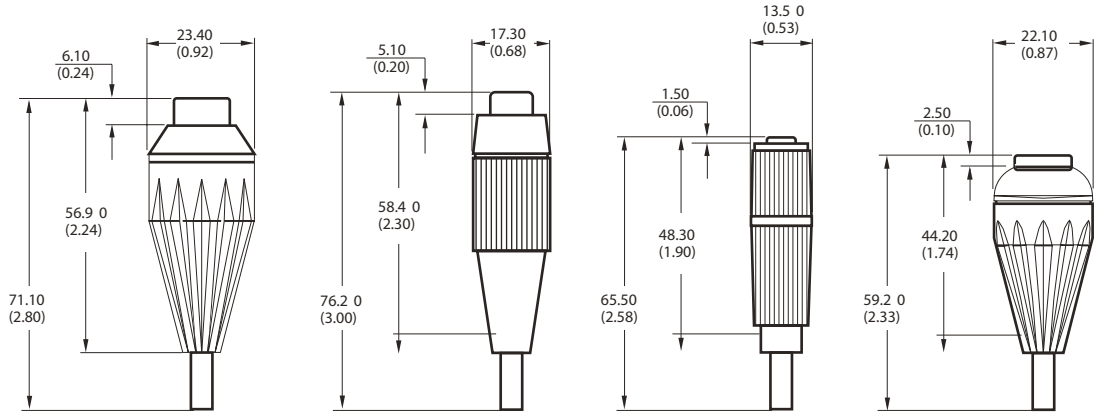

5 | E | G | H

M series

Proportional resistive fingertip controllers • potentiometer technology

THREE AXIS

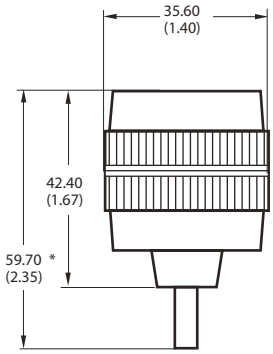

8

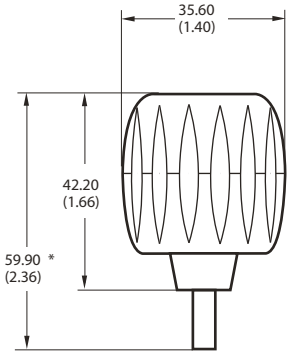

M

THREE AXIS WITH PUSHBUTTONS

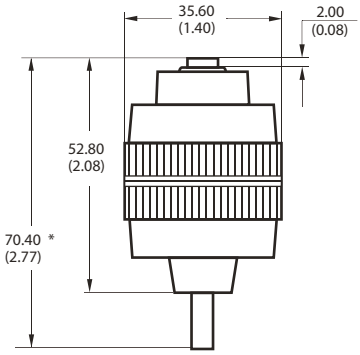

9

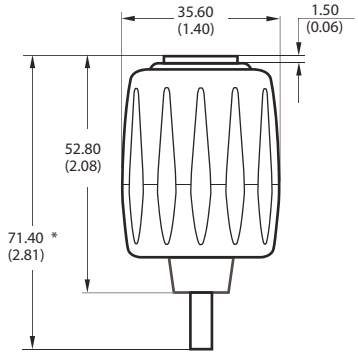

N

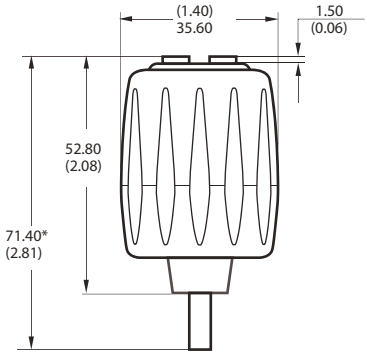

O