# NR05

Product no.: T0058736867N

## Benefits

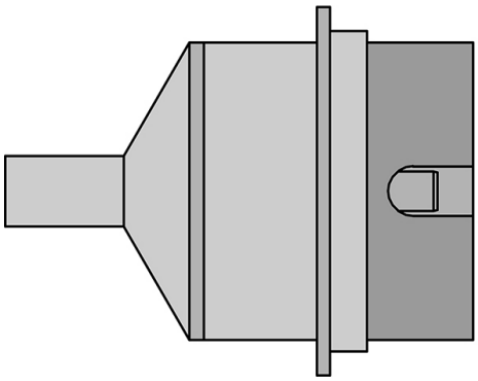

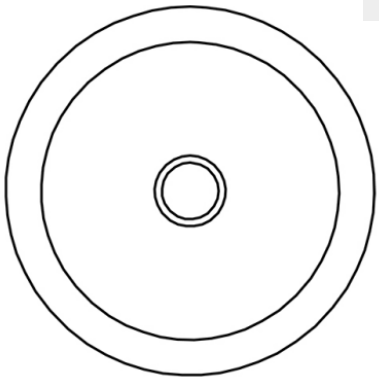

## Technical Data

| | |
|---|---|
| Tip shape | Round nozzle, without vacuum |
| Length mm | --- |
| Length inches | --- |
| Width in mm | --- |
| Width in inches | --- |
| Outer diameter in mm | --- |
| Outer diameter in inches | --- |
| Inner diameter mm | --- |
| Inner diameter inches | --- |
| Nozzle length in mm | --- |
| Nozzle length in inches | --- |
| Packaging unit | 1 |

**Weller Tools GmbH**
Carl-Benz-Straße 2
74354 Besigheim
Germany

Phone: +49 (0) 7143 / 580-0
Fax.: +49 (0) 7143 / 580-108
Email: info@weller-tools.com
Web: www.weller-tools.com