SV200 AC Servo

User Manual



Applied Motion Products

920-0096H
2/6/2018

Table of Contents

1 Introduction 9
1.1 About This Manual 9
1.1.1 Documentation Set for SV200 series AC servo 9
1.1.2 Safety 9
1.1.2.1 Safety Symbols 9
1.1.2.2 Safety Instructions 10
2 Product Description 11
2.1 Unpacking Check 11
2.2 Servo Drive Model Introduction 11
2.2.1 Drive Name Plate Description 11
2.2.2 Drive Model Description 12
2.2.3 Drive specification 13
2.2.4 Drive Dimensions (Unit: mm) 15
2.3 Servo Motor Model Introduction 16
2.3.1 Motor Name Plate Description 16
2.3.2 Motor Model Description 16
2.3.3 40mm Motor Specification And Dimension 17
2.3.3.1 40mm Dimensions 18
2.3.3.2 40mm Torque curve 19
2.3.4 60mm Specification and Dimension 20
2.3.4.1 60mm Dimensions 21
2.3.4.2 60mm Torque curves 22
2.3.5 80mm Specification and Dimension 24
2.3.5.1 80mm Dimensions 25
2.3.5.2 80mm Torque Curve 26
2.3.6 Servo Drive and Servo Motor Combination 27
2.3.6.1 120VAC Power Input 27
2.3.6.2 220VAC Power Input 28
2.4 System Configuration 29
3 Installation 30
3.1 Storage Conditions 30
3.2 Installation Conditions 30
3.3 Installation Space 31
3.4 Motor Installation 32
4 Connections and Wiring 33
4.1 Connecting to Peripheral Devices 33
4.1.1 System Configuration 33
4.1.2 Servo Drive Connectors and Terminals 34
4.1.3 Connections and Wiring Notes 34
4.1.4 Wiring Methods For Power supply P1 35
4.1.4.1 Single-Phase Power Supply Connection (120VAC and 220VAC) 35
4.1.4.2 Three-Phase Power Supply Connection (AC220V) 36
4.2 Wiring to the Connector P2 37
4.2.1 Motor Power Cable Configuration 37
4.2.2 Motor Power Cable Connector Specifications 37

4.2.3 Wiring Diagram Of Motor Extension Cable 38
4.3 Encoder Connector CN3 38
4.3.1 Motor Encoder Feedback Cable Configuration 38
4.3.2 The Layout of CN3 Connector 38
4.3.3 Connect to Motor Encoder 39
4.3.4 Specifications of Encoder Connector 39
4.3.5 15PIN AMP Connector 39
4.3.6 Wiring Diagram of Motor Encoder Extend Cable 40
4.4 Electromagnetic Brake 41
4.4.1 Wiring Diagram 41
4.4.2 Brake Motor 41
4.4.3 Timing Charts Of The Electromagnetic Brake 41
4.5 Regenerative Resistor 42
4.6 Recommended Cable Specifications 42
4.7 Connect to Host Computer, CN1 43
4.8 Input and Output Signal Interface Connector, CN2 43
4.8.1 Input and Output Interface Specifications and Diagram 43
4.8.2 Signals Description of Connector CN2 45
4.8.2.1 The Layout of CN2 Connector 45
4.8.2.2 Input Signals 45
4.8.2.3 Inputs Function List 46
4.8.2.4 Output Signals 47
4.8.2.5 Outputs Function List 47
4.8.3 Input Signal Interface Connector CN2 48
4.8.3.1 Position pulse signal input 48
4.8.3.2 Analog Signal Input For Velocity And Torque Mode 49
4.8.3.3 High Speed Input Port X1, X2, X3, X4 50
4.8.3.4 General Digital Input X5, X6, X7, X8 52
4.8.3.5 X9, X10, X11, X12 Input With Common Com Port 54
4.8.4 CN2 Output Signal Specification 56
4.8.5 CN2 Output Signal Diagram 56
4.8.5.1 Y1, Y2, Y5, Y6 Output Connection Diagram 56
4.8.5.2 Y3, Y4 Connection Examples 57
4.8.6 Encoder Feedback Output 57
4.8.6.1 A/B/Z Connection Diagram 57
4.8.6.2 Z Phase Open Collector Output 57
5 Display and Operation 58
5.1 Description of Control Panel 58
5.2 Mode Switch Control 58
5.3 LED display description 60
5.3.1 Decimal Point And Negative Sign Description 60
5.3.2 Parameter View Setting 60
5.3.3 Parameter Save Setting 60
5.3.4 Point To Point Motion Mode 60
5.3.5 Jog Mode 61
5.3.6 Control Panel Lock 61
5.4 Status Monitoring Selection Mode 61

5.5 Function Mode Control 63
5.5.1 Function Mode Description 63
5.5.2 Operation Flow Chart : 64
5.6 Parameter Setting Mode 65
5.6.1 Parameter Setting Description 65
5.6.2 Parameter Editing Examples 66
5.7 Control Panel Lock 67
5.8 Warning And Fault Display 67
6 Preoperational mode 69
6.1 Inspection Before Trial Run 69
6.2 Trial Run Procedure 69
6.3 Manual Motor Configuration 70
6.3.1 Use Drive Control Panel To Setup 70
6.3.2 Using Software To Configure Motor 71
6.4 Using JOG Mode 72
6.5 Configuration by Personal Computer 72
7 Operation Mode Selection 74
7.1 General Function Setting 74
7.1.1 Drive Servo On settings 74
7.1.2 Alarm Reset 75
7.1.3 CW/CCW limit 76
7.1.4 Global Gain Switch Function 77
7.1.5 Control Mode Switch 78
7.1.6 Drive On Fault Output 79
7.1.7 Motor Brake Control 80
7.1.8 Servo Ready Output 81
7.1.9 Servo On Status Output 82
7.1.10 Timing Diagram 83
7.1.10.1 Timing Diagram at Power up 83
7.1.10.2 Timing Diagram for Fault alarm 83
7.2 Position Mode 84
7.2.1 Digital Pulse Position Mode Connection Diagram 84
7.2.2 Input Pulse Type And Input Noise Filter 85
7.2.3 Input Pulse Type Setting 85
7.2.4 Input Noise Filter Setting 85
7.2.5 Input Pulse Dividing Ratio Setting and Dividing Switch 87
7.2.5.1 The pulse dividing ratio setting 87
7.2.5.2 Control Pulse Dividing Switch Function 87
7.2.6 Pulse Inhibit Function 88
7.2.7 Electronic Gearing Ratio 89
7.2.8 Jerk Smoothing Filter 90
7.2.9 In-Position Error Output 90
7.2.10 Gain Parameters For Position Control Mode 91
7.2.11 Software Configuration For Position Mode 92
7.3 Velocity Mode 93
7.3.1 Velocity Mode Connection Diagram 94

7.3.2 Parameter Settings For Analog Velocity Control Mode 95
7.3.3 Basic Settings For Analog Velocity Control Mode 96
7.3.3.1 Command Signal For Analog Velocity Mode 96
7.3.3.2 Analog Velocity Gain 97
7.3.3.3 Analog Input Voltage Offset 97
7.3.3.4 Analog Input Deadband 98
7.3.3.5 Run/Stop And Direction Signal 98
7.3.3.6 Torque Limit 99
7.3.3.7 Target Velocity Reached 99
7.3.3.8 Velocity Mode Control Type 100
7.3.3.9 Velocity ripple range 101
7.3.4 Analog Input Filter 102
7.3.5 Software Configuration For Analog Velocity Mode 103
7.4 Torque Mode 104
7.4.1 Analog Torque Mode Connection Diagram 105
7.4.2 Parameters For Analog Torque Mode 106
7.4.3 Basic Settings For Analog Torque Mode 106
7.4.3.1 Command Signal For Analog Torque Mode 106
7.4.3.2 Analog Torque Gain 107
7.4.3.3 Analog Input Offset 108
7.4.3.4 Analog Deadband 108
7.4.3.5 Run/Stop and Direction signal 109
7.4.3.6 Velocity Limit 109
7.4.3.7 Torque Reached 110
7.4.4 Software Configuration For Analog Torque Mode 111
8 Parameters and Functions 112
8.1 Parameter Category 112
8.2 Parameter List 112
8.3 Parameter Description 116
9 Communication 138
9.1 RS-232 communication 138
9.1.1 What is SCL 138
9.1.2 RS-232 Connections 138
9.2 RS-485 Communication 139
9.2.1 RS-485 PIN definition 139
9.2.2 RS-485 Connection Method 140
9.3 ModBUS/RTU Communication 141
9.3.1 Data Encoding 141
9.3.2 Communication Address 141
9.3.3 Communication Baud Rate And Framing 141
9.3.4 Power Up Mode 141
9.3.5 Modbus/RTU Data Framing 142
9.3.6 SV200 Series AC Servo Drive Register Address And Function List: 142
9.3.7 Command Opcode description 146
9.3.8 Function Code 147
9.3.8.1 Function Code 0X03, Reading Multiple Holding Registers 147
9.3.8.2 Function Code 0x06, Writing Single Register 148
9.3.8.3 Function Code 0X10, Writing Multiple Registers 148

9.3.9 Modbus/RTU Applications 150
9.3.9.1 Position Control 150
9.3.9.2 JOG mode 153
9.4 CANopen Communication 156
9.4.1 RJ45 (8p8c) Pin Definitions 156
9.4.2 CANopen NODE-ID 156
9.4.3 CANopen Communication Baud Rate 156
9.5 Ethernet Communication 157
9.5.1 Connecting PC using Ethernet 157
9.5.1.1 Setting the IP Address 157
9.5.1.2 Connecting to Drive from PC 158
9.5.2 Select Driver's IP Address 158
9.5.2.1 SVX Servo Suite Software 158
9.5.2.2 Set IP address from Drive 160
9.5.3 Editing IP address table 161
10 SV200 Tuning Guide 162
10.1 Servo Tuning – Adjustment of Gain Parameters 162
10.1.1 Gain Parameter Introduction 163
10.2 Auto-Tuning 164
10.2.1 Step 1: Select Motor 164
10.2.2 Step 2: Setting the Software Position Limits 165
10.2.3 Step 3 Auto-Tuning Function 167
10.3 Fine tuning 168
10.3.1 Position loop gain (KF) 168
10.3.2 Integrator Gain (KI) 170
10.3.3 Damping gain (KV) 171
10.3.4 Derivative gain (KD) 172
10.3.5 Inertia Feedforward Constant (KK) 174
10.3.6 Follow Factor (KL) 175
10.4 Using Auto Trigger Sampling 176
11 STO Function 177
11.1 Operation and maintenance procedures 177
11.1.1 The replacement of components 177
11.1.2 Preventing hazardous event 177
11.1.3 Maintenance procedures of STO faults or failures 177
11.1.4 Commissioning and testing 177
11.2 The implementation of Safe Torque off 177
11.2.1 Safety Functional Specification 177
11.2.1.1 Safety input Signal 178
11.2.1.2 External device monitor (EDM)output signal 178
11.2.1.2 +5VDC Source 178
11.2.2 The fault reaction function 178
11.2.3 Response time 178
11.2.3.1 Operating timing chart for safety status 178
11.2.3.2 Return timing from safety state: 179
11.2.4 11.2.4 Safety function activated or prohibit 179
11.2.5 11.2.5 STO function as the highest priority. 179

11.3 The safety integrity information 179
11.4 The environmental and operating conditions for safety function 179
11.4.1 The environmental and operating conditions 179
11.5 Safety function constraints 180
11.5.1 Failure rate 180
11.5.2 Mission time and proof test 180
11.5.3 Testing, calibration or maintenance requirements 180
11.5.4 11.5.4 Avoiding systematic failure 180
11.5.5 SIL capability 180
11.5.6 Identify the hardware and software configuration 180
11.6 The installation and commissioning guidance 181
11.6.1 Installation 181
11.6.1.1 Example of connection to safety switch 181
11.6.1.2 Example of connection to safety Light Curtain 181
11.6.2 commissioning 181
11.7 Requirements for safety functions configuration test 182
11.7.1 Inspection Requirments 182
11.7.2 Safety relevant parameters and their values 182
11.7.3 The test procedures of safety functions 182
11.7.4 The description of the safety related components 182
12 Trouble Shooting 183
12.1 Drive Alarm List 183
12.2 Drive alarm troubleshooting 184
13 Appendix 187
13.1 Appendix 1: LED Character Reference 187
13.2 Appendix 2: Accessories 188
13.2.1 Mating Connectors 188
13.2.2 Servo Motor Power Cable (Recommended) 188
13.2.3 Servo Feedback Cable (Recommended) 189
13.2.4 I/O Accessories (Not Included) 189

Revision History

Document History	Date	Remarks
Revision A	2015.8.5	Initial release
Revision B	2016.3.9	cleanup to manual
Revision C	2016.5.4	Table, pg 30, Diagram, pg 31, manual cleanup
Revision D	2016.5.11	Add note to image on pg 31
Revision E	2016.12.15	New products added, revise content
Revision F	2017.02.02	Revise content
Revision G	2017.08.29	STO chapter, revise content

Disclaimer

The information in this manual was accurate and reliable at the time of its release. AMP reserves the right to change the specifications of the product described in this manual without notice at any time.

Trademarks

All marks in this manual are the property of their respective owners

Customer Service

AMP is committed to delivering quality customer service and support for all our products. Our goal is to provide our customers with the information and resources so that they are available, without delay, if and when they are needed.

In order to serve in the most effective way, we recommend that you contact your local sales representative for order status and delivery information, product information and literature, and application and field technical assistance. If you are unable to contact your local sales representative for any reason, please use the most relevant of the contact details below:

For technical support, contact: http://www.applied-motion.com/support

1 Introduction

1.1 About This Manual

This manual describes the SV200 Servo Drive.

It provides the information required for installation, configuration and basic operation of the SV200 series AC servo drive.

This document is intended for persons who are qualified to transport, assemble, commission, and maintain the equipment described herein.

1.1.1 Documentation Set for SV200 series AC servo

This manual is part of a documentation set. The entire set consists of the following:

- SV200 User Manual. Hardware installation, configuration and operation.
- SVX ServoSUITE® User Manual. How to use the SVX ServoSUITE®.

1.1.2 Safety

Only qualified persons may perform the installation procedures. The following explanations are for things that must be observed in order to prevent harm to people and damage to property.



The SV200 utilizes hazardous voltages. Be sure the drive is properly grounded.

Before you install the SV200, review the safety instructions in this manual.

Failure to follow the safety instructions may result in personal injury or equipment damage.

1.1.2.1 Safety Symbols

Safety symbols indicate a potential for personal injury or equipment damage if the recommended precautions and safe operating practices are not followed.

The following safety-alert symbols are used on the drive and in the documentation:

 Caution

 Warning. Dangerous voltage.

 Protective earth

 Caution, Hot surface

1.1.2.2 Safety Instructions

1.1.2.2.1 Installation

	DO NOT subject the product to water, corrosive or flammable gases, and combustibles.
	DO NOT use the motor in a place subject to excessive vibration or shock.
	Never connect the motor directly to the AC power supply.
	DO NOT use cables soaked in water or oil.
	DO NOT extrude or pull-off the cable, nor damage the cables as electrical shocks, as damage may result
	DO NOT block the heat-dissipating holes. Please prevent any metal filings from dropping into into the drive when mounting.
	DO NOT switch the power supply repeatedly.
	DO NOT touch the rotating shaft when the motor is running.
	DO NOT strike the motor when mounting as the motor shaft or encoder may be damaged.
	In order to prevent accidents, the initial trial run for servo motor should be conducted under no-load conditions (separate the motor from its couplings and belts).
	Starting the operation without matching the correct parameters may result in servo drive or motor damage, or damage to the mechanical system.
	DO NOT touch either the drive heat sink or the motor and regenerative resistor during operation as they may become hot.
	DO NOT carry the motor by its cables.

1.1.2.2.2 Wiring

	DO NOT connect any power supplies to the U,V,W terminals.
	Install the encoder cable in a separate conduit from the motor power cable to avoid signal noise.
	Use multi-stranded twisted-pair wires or multi-core shielded-pair wires for signal, encoder cables.
	As a charge may still remain in the drive with hazardous voltage even after power has been removed, Do not touch the terminals when the charge LED is still lit.
	Please observe the specified voltage ratings.
	Make sure both the drive and the motor connect to a class 3 ground.
	Please ensure grounding wires are securely connected when power up.

1.1.2.2.3 Standards Compliance

The SV200 Series AC servo drive has been designed according to standards:

* Electromagnetic compatibility
  Standard EN 61800-3 (2004)

* Electrical Safety: Low voltage directive
  Standard IEC 61800-5-1 (2007)

2 Product Description

2.1 Unpacking Check

Please refer to this section to confirm the model of servo drive and servo motor .

A complete and workable AC servo system should include the following parts:

* Matched Servo drive and Servo motor
* A power cable connect the drive to the servo motor
* A feedback encoder cable connecting the drive to the motor
* A mini (Type B) USB cable connect the port CN1 to PC for communication. (Not needed for Ethernet drives)
* 50-PIN connector (For I/O connections, Port CN2)
* 26-PIN connector(For encoder feedback, Port CN3)
* 10-PIN connector (For STO, Port CN5) (Required)
* RJ-45 CAT5 patch cables (For RS-485, Ethernet or CANopen communication, Port CN6 and CN7)(user supplied)
* 5-PIN connector (For L1,L2,L3,L1C,L2C)
* 6-PIN connector(For U,V,W,B1+,B2,B3)

2.2 Servo Drive Model Introduction

2.2.1 Drive Name Plate Description

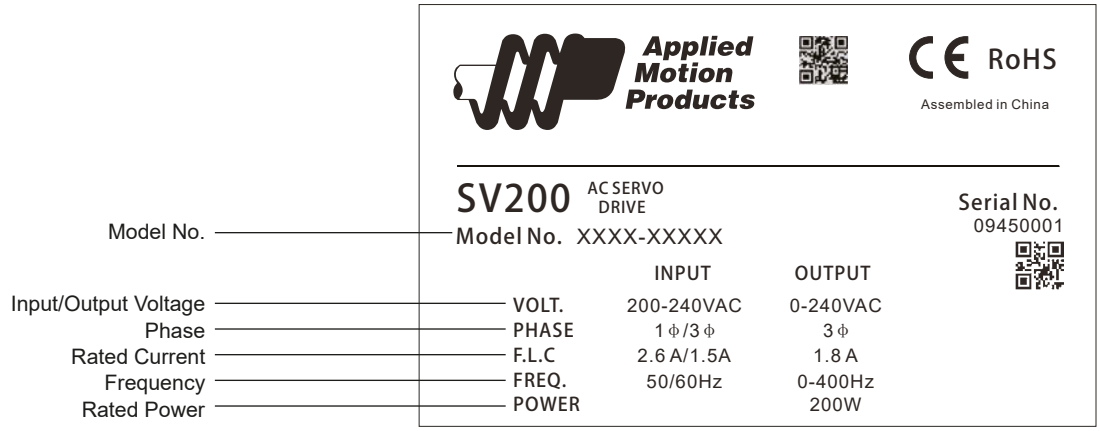

2.2.2 Drive Model Description

SV200 Servo Drives
Model Numbering

SV2A3-Q-AE-000

Series
SV200 Servo Series

Input Voltage
A = 120 VAC
B = 220 VAC
D = 24-80 VDC

Output Current
2 = 1.8A rms continuous
3 = 3.0A
5 = 4.5A (220 VAC), 5.4A (120 VAC)
7 = 7.0A

Control
P = pulse/dir
S = SCL
Q = SCL + Q language + Modbus
C = CANopen
IP = EtherNet/IP

Communications
A = RS-232 (Standard)
R = RS-485
C = CANopen (requires C control option)
E = Ethernet
N = none
all models use USB for set up and tuning

Feedback
E = Encoder Option Board

Custom features
Consult factory for options

2.2.3 Drive specification

Basic Specification	Input Power	100W SV2A2	Main Circuit	Single phase, 120VAC to 100-120VAC, ±10% 50/60Hz
			Control Circuit	Single phase, 120VAC to 100-120VAC, ±10% 50/60Hz
		200W SV2A3	Main Circuit	Single phase, 120VAC to 100-120VAC, ±10% 50/60Hz
			Control Circuit	Single phase, 120VAC to 100-120VAC, ±10% 50/60Hz
		400W SV2A5	Main Circuit	Single phase, 120VAC to 100-120VAC, ±10% 50/60Hz
			Control Circuit	Single phase, 120VAC to 100-120VAC, ±10% 50/60Hz
		200W SV2B2	Main Circuit	Single/3-phase, 220VAC to 220-240VAC, ±10% 50/60Hz
			Control Circuit	Single phase, 220VAC to 220-240VAC, ±10% 50/60Hz
		400W SV2B3	Main Circuit	Single/3-phase, 220VAC to 220-240VAC, ±10% 50/60Hz
			Control Circuit	Single phase, 220VAC to 220-240VAC, ±10% 50/60Hz
		750W SV2B5	Main Circuit	Single/3-phase, 220VAC to 220-240VAC, ±10% 50/60Hz
			Control Circuit	Single phase, 220VAC to 220-240VAC, ±10% 50/60Hz
	Withstand voltage			Primary to earth: withstand 1500 VAC, 1 min, (sensed current: 20 mA) [220V Input]
	Environment	Temperature		Ambient temperature:0°C to 50°C (If the ambient temperature of servo drive is greater than 40°C, please install the drive in a well-ventilated location) Storage temperature: -20°C to 65C. Operating temperature: 0°C to 85°C.
		Humidity		Both operating and storage : 10 to 85%RH or less
		Vibration		5.88m/s2 or less, 10 to 60Hz (No continuous use at resonance frequency)
		Weight		SV2B2: 1.86 lbs; SV2B3: 2.65 lbs; SV2B5: 3.60 lbs
	Control method			IGBT PWM Sinusoidal wave drive
	Encoder feedback			2500 line incremental encoder 15-wire
	I/O	Control Signal	Input	8 Configurable Optically isolated digital general inputs, 5-24VDC, max input current 20mA 4 Configurable Optically isolated digital high speed inputs, 5-24VDC, max input current 20mA
			Output	5 Configurable optically isolated digital outputs, 30VDC, max output current 30mA One motor brake control output, 30VDC 100mA max
		Analog signal	Input	2 inputs (12Bit A/D : range: + /- 10VDC)
		Pulse signal	Input	2 inputs (Photo-coupler input, Line receiver input) Photocoupler input is compatible with both line driver I/F and open collector I/F. Line receiver input is compatible with line driver I/F.
			Output	4 outputs (Line driver: 3 outputs, open collector: 1 output)
	Communication	USB Mini type B		Connection with PC or 1 : 1 communication to a host.
		RS232		RS-232 Communication
		RS485		RS-485 Communication
		CAN bus		CANopen Communication
		Ethernet		EtherNET/IP, eSCL
	Front panel			1. 4 keys (MODE, UP, DOWN, SET) 2. LED (5-digit)
	Regeneration Resistor			Built-in regenerative resistor (external resistor is also enabled.)
	Control mode			(1) Position mode (2) Analog Velocity mode (3) Analog Position mode (4) Position mode (5) Velocity Change mode (6) Command Torque mode (7) Command Velocity mode

	Control input	(1) Servo-ON input (2) Alarm clear input (3) CW/CCW Limit (4) Pulse& Direction or CW/CCW input (5) Gain Switch (6) Control mode Switch (7) Pulse Inhibit (8) General Input
	Control output	(1) Alarm output (2) Servo-Ready output (3) External brake release (4) Speed Reached output (5) Torque Reached output (6) TachOut (7) General Output (8)Position Reached output

2.2.4 Drive Dimensions (Unit: mm)

SV2A2-x-xx, SV2B2-x-xx

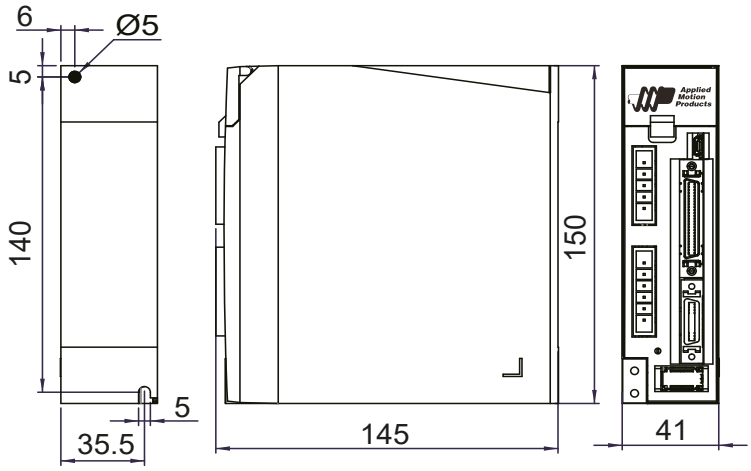

SV2A3-x-xx, SV2B3-x-xx

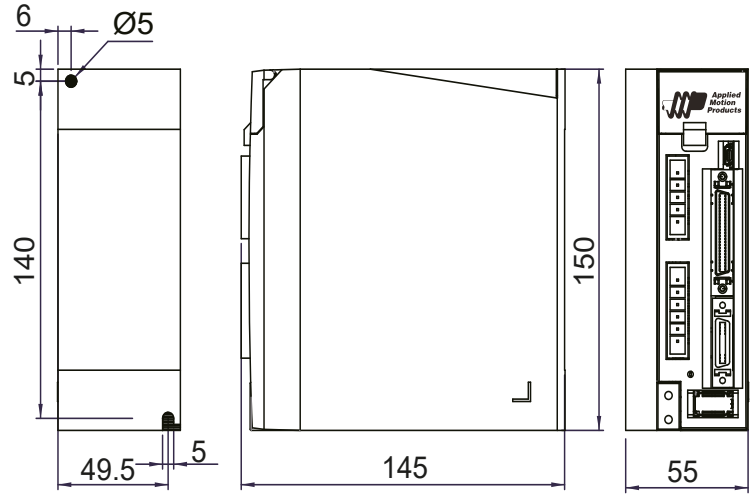

SV2A5-x-xx, SV2B5-x-xx

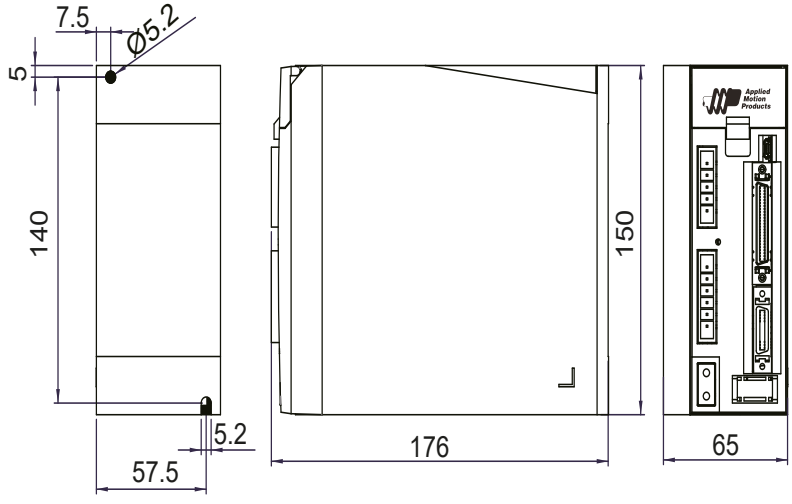

2.3 Servo Motor Model Introduction

2.3.1 Motor Name Plate Description

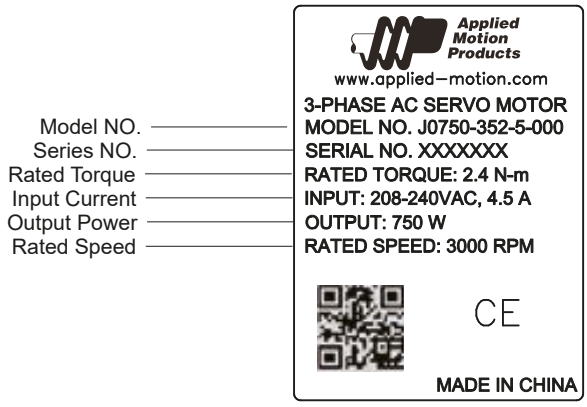

2.3.2 Motor Model Description

X0000-000-0-000

Series
J = Metric Flange

Wattage Rating
0050 = 50 watts
0100 = 100 watts
0200 = 200 watts
0400 = 400 watts
0750 = 750 watts
1000 = 1000 watts

Feedback Type
3 = 2500 line inc. encoder

Brake
0 = None
5 = Included

Voltage
1 = 100
2 = 200
3 = 24
4 = 48
5 = 60

Frame Size
3 = 40mm
4 = 60mm
5 = 80mm
7 = 100mm

Custom Features - Consult factory for
Keyway
Flat(s)
Optional Gearhead
Other

Consult Price List or Catalog
for standard product offering

2.3.3 40mm Motor Specification And Dimension



UL File	E465363
Insulation Class	Class B(130°C)
IP rating	IP65 (except shaft through hole and cable end connector)
Installation location	Indoors, free from direct sunlight, corrosive gas, inflammable gas
Ambient temperature	Operating 0 to 40°C, Storage -20 to 80 C
Ambient humidity	85%RH or lower (free from condensing)
Vibration Resistance	49 m/s^2
Rotor Poles	8

40mm Series

Series		J0100 - 100 Watt
Base Model Number (with 2500 PPR incremental encoder non-sealed plastic connectors, no brake)		J0100-301-3-000
Rated Output Power	watts	100
Rated Speed	rpm	3000
Max. Mechanical Speed	rpm	6000
Rated Torque	In-lb	2.8
Continuous Stall Torque	In-lb	3
Peak Torque	In-lb	8.1
Rated Current	A (rms)	1.65
Continuous Stall Current	A (rms)	1.27
Peak Current	A (rms)	4.95
Voltage Constant ±5%	V (rms) / K rpm	20.4
Torque Constant ±5%	Nm / A (rms)	0.195
Winding Resistance (Line-Line)	Ohm ±10% @25°C	4.9
Winding Inductance (Line-Line)	mH (typ.)	5.9
Inertia (with encoder)	oz-in-sec2	0.000606
Inertia - With Brake Option	oz-in-sec2	0.000699
Thermal Resistance (mounted)	°C / W	2.4
Thermal Time Constant	Minutes	14.5
Heat Sink Size	mm	120 x 120 x 5 Aluminum
Shaft Load - Axial	(max.)	50 N / 11 Lb
Shaft Load - Radial (End of Shaft)	(max.)	60 N / 13.5 Lb
Weight (with std. encoder)		0.55 kg / 1.2 Lb
Weight - With Brake Option		0.8 kg / 1.8 lb

Shaft Load: (L10 life, 20,000 hours, 2,000 RPM)

2.3.3.1 40mm Dimensions

1 Motor Dimensions – No Brake: mm

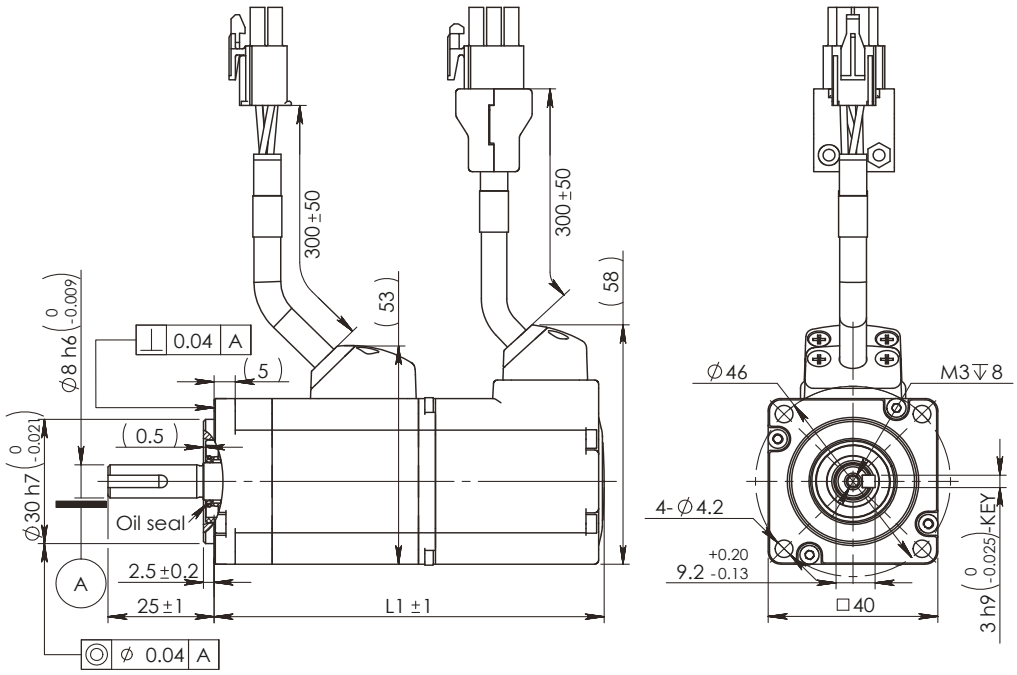

Without Brake	L1
J0100-301-3	109

2 Motor Dimensions – Brake: mm

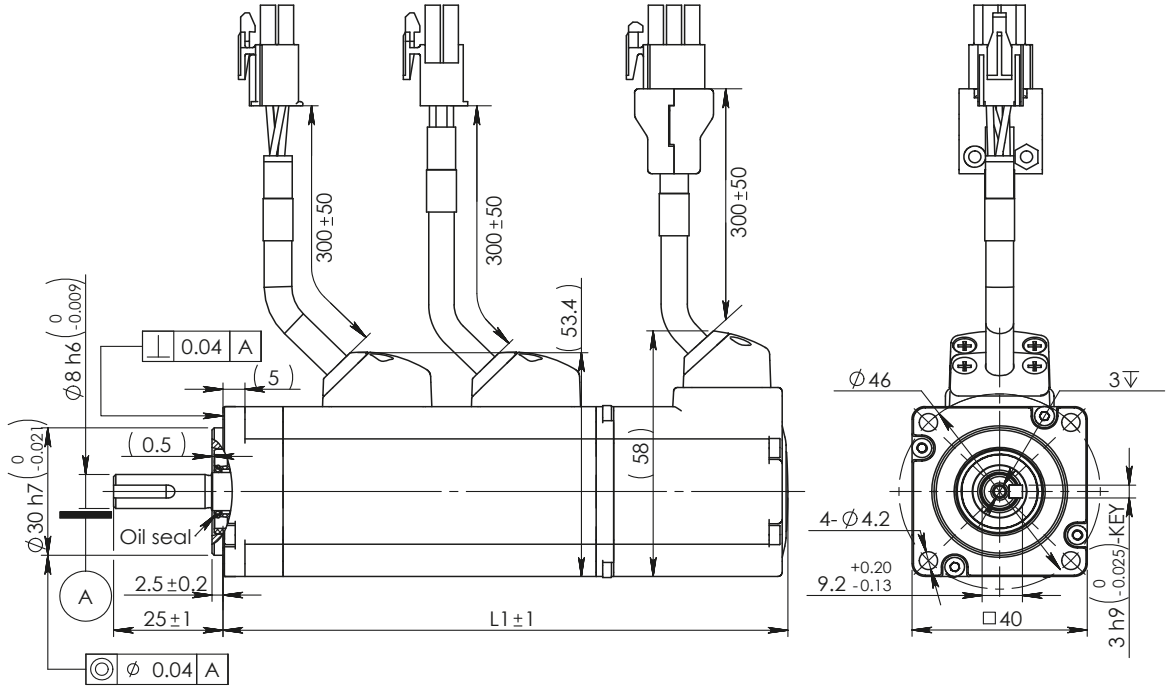

With Brake	L1
J0100-351-3	147

2.3.3.2 40mm Torque curve

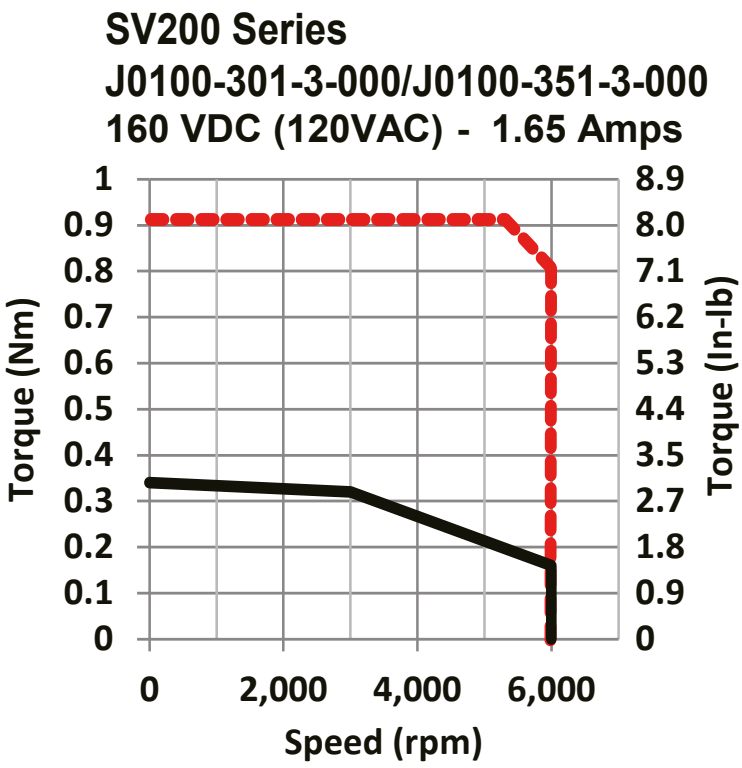

2.3.4 60mm Specification and Dimension



UL File	E465363
Insulation Class	Class B(130°C)
IP rating	IP65(except shaft through hole and cable end connetor)
Installation location	Indoors, free from direct sunlight, corrosive gas, inflammable gas
Ambient temperature	Operating 0 to 40°C, Storage -20 to 80°C
Ambient humidity	85%RH or lower (free from condensing)
Vibration Resistance	49 m/s2
Rotor Poles	8

60mm Series

Series		J0200 - 200 Watt	J0200 - 200 Watt	J0400 - 400 Watt	J0400 - 400 Watt
Base Model Number (with 2500 PPR incremental encoder non-sealed plastic connectors, no brake)		J0200-301-4-000	J0200-302-4-000	J0400-301-4-000	J0400-302-4-000
Rated Output Power	watts	200	200	400	400
Rated Speed	rpm	3000	3000	3000	3000
Max. Mechanical Speed	rpm	6000	6000	6000	6000
Rated Torque	In-lb	5.66	5.66	11.23	11.23
Continuous Stall Torque	In-lb	6.02	6.02	11.24	11.24
Peak Torque	In-lb	16.8	16.8	33.63	33.63
Rated Current	A (rms)	1.5	1.5	2.7	2.7
Continuous Stall Current	A (rms)	1.5	1.5	2.7	2.7
Peak Current	A (rms)	4.5	4.5	8.1	8.1
Voltage Constant ±5%	V (rms) / K rpm	27.2	27.2	29	29
Torque Constant ±5%	Nm / A (rms)	0.432	0.432	0.484	0.484
Winding Resistance (Line-Line)	Ohm ±10% @25°C	8.6	8.6	3.7	3.7
Winding Inductance (Line-Line)	mH	25	25	12.9	12.9
Inertia (with encoder)	oz-in-sec2	0.00233	0.00233	0.00385	0.00385
Inertia - With Brake Option	oz-in-sec2	0.00311	0.00311	0.00461	0.00461
Thermal Resistance (mounted)	°C / W	1.9	1.9	1.43	1.43
Thermal Time Constant	Minutes	15	15	21	21
Heat Sink Size	mm	180 x 180 x 5 Alum	180 x 180 x 5 Alum	180 x 180 x 5 Alum	180 x 180 x 5 Alum
Shaft Load - Axial	(max.)	70 N / 15 Lb	70 N / 15 Lb	70 N / 15 Lb	70 N / 15 Lb
Shaft Load - Radial (End of Shaft)	(max.)	200 N / 45 Lb	200 N / 45 Lb	240 N / 54 Lb	240 N / 54 Lb
Weight (with std. encoder)		1.1 kg / 2.3 lb	1.1 kg / 2.3 lb	1.4 kg / 3.1 lb	1.4 kg / 3.1 lb
Weight - With Brake Option		1.6 kg / 3.5 lb	1.6 kg / 3.5 lb	1.9 kg / 4.2 lb	1.9 kg / 4.2 lb

Shaft Load: (L10 life, 20,000 hours, 2,000 RPM)

2.3.4.1 60mm Dimensions

1 Motor Dimensions – No Brake: mm

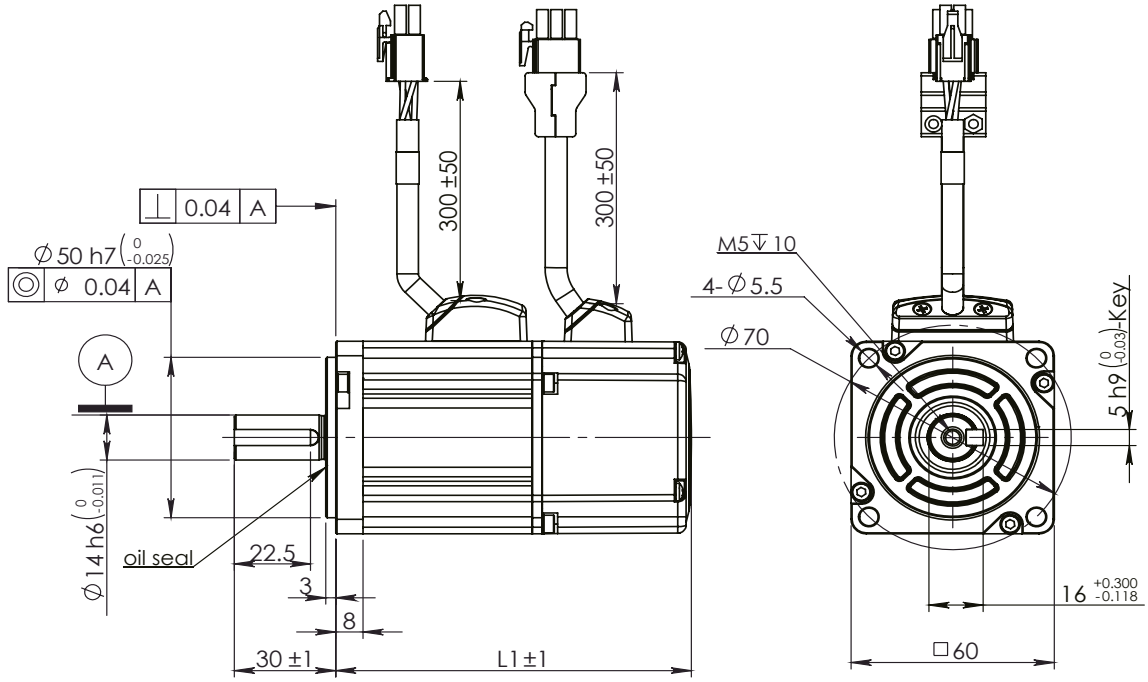

Without Brake	L1
J0200-30x-4	105
J0400-30x-4	118

2 Motor Dimensions – Brake: mm

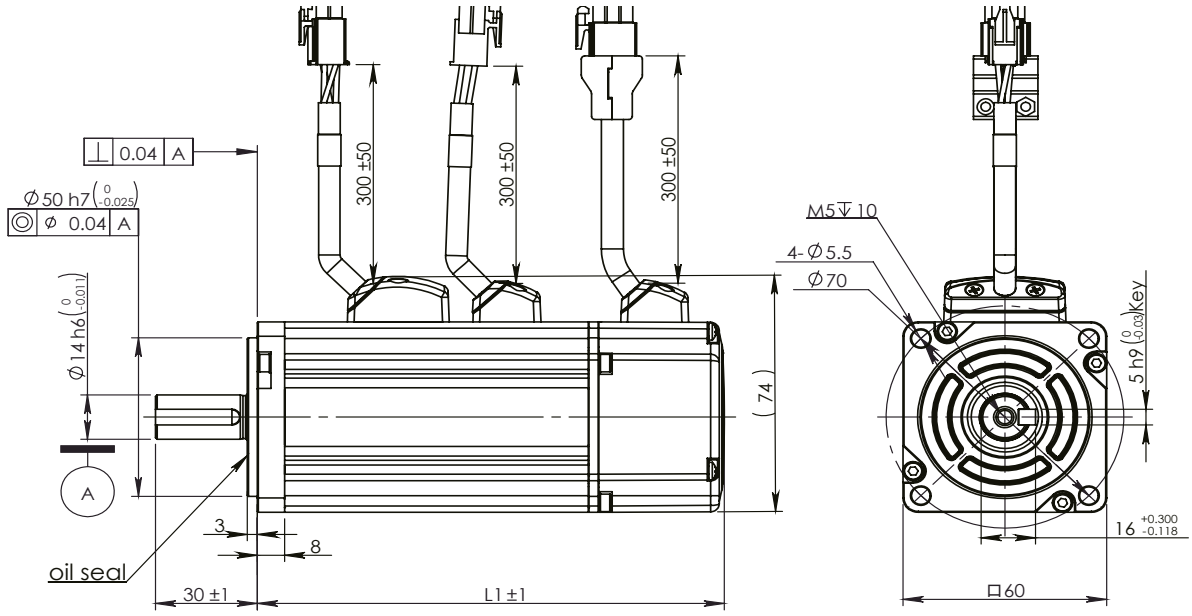

With Brake	L1
J0200-35x-4	145
J0400-35x-4	158

2.3.4.2 60mm Torque curves

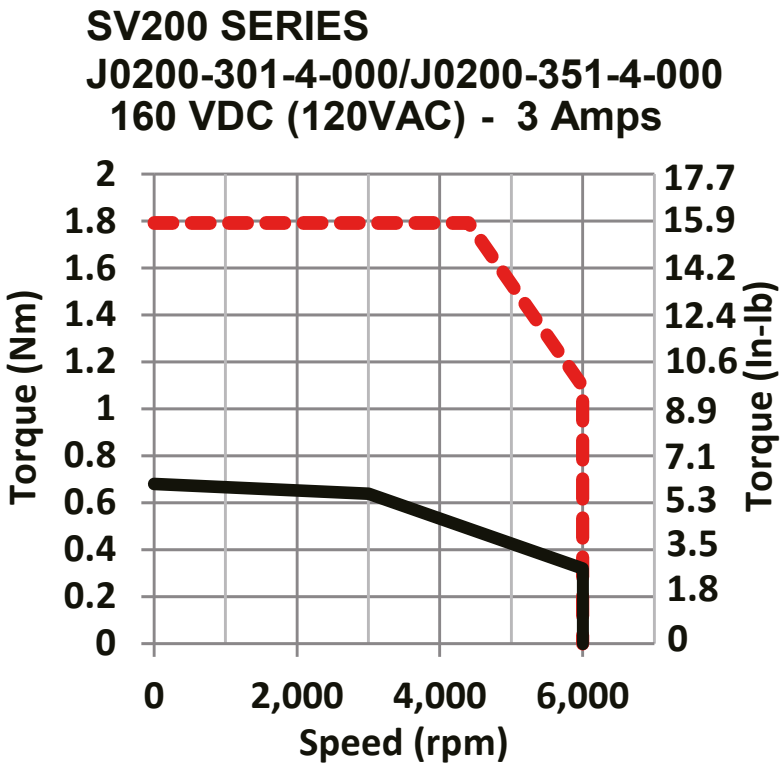

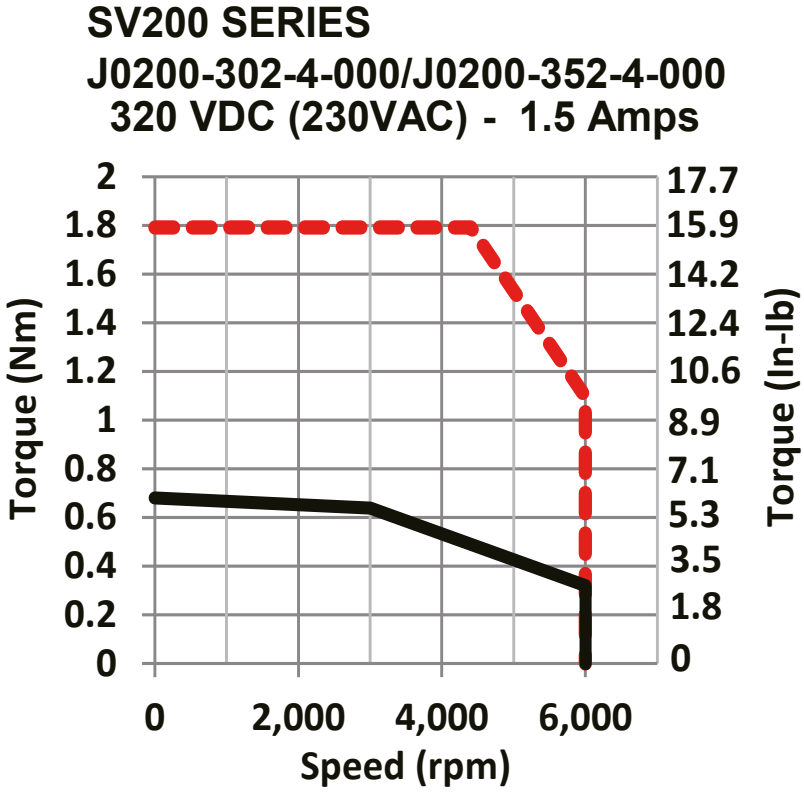

60mm Torque curves

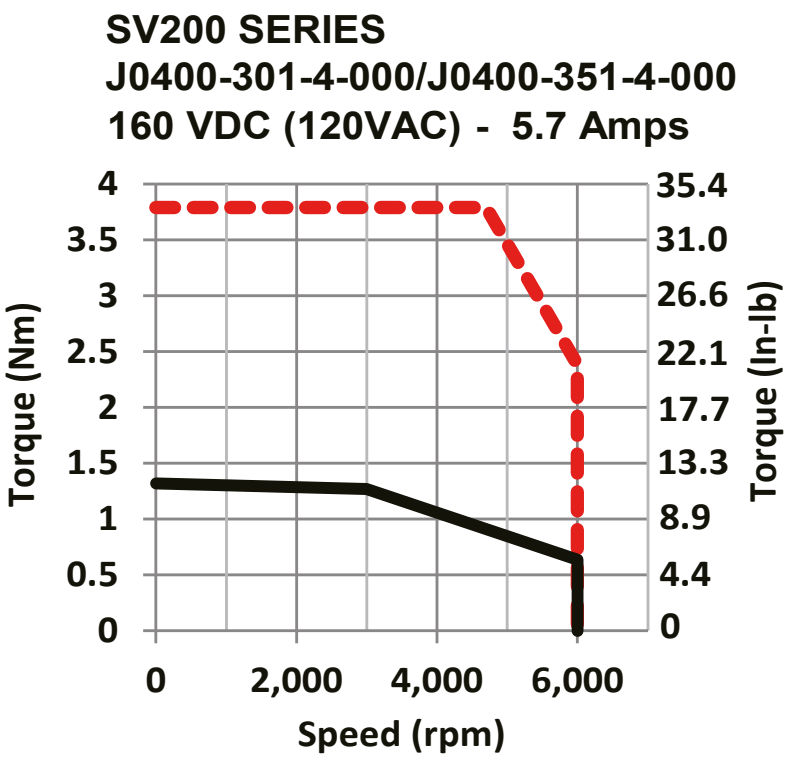

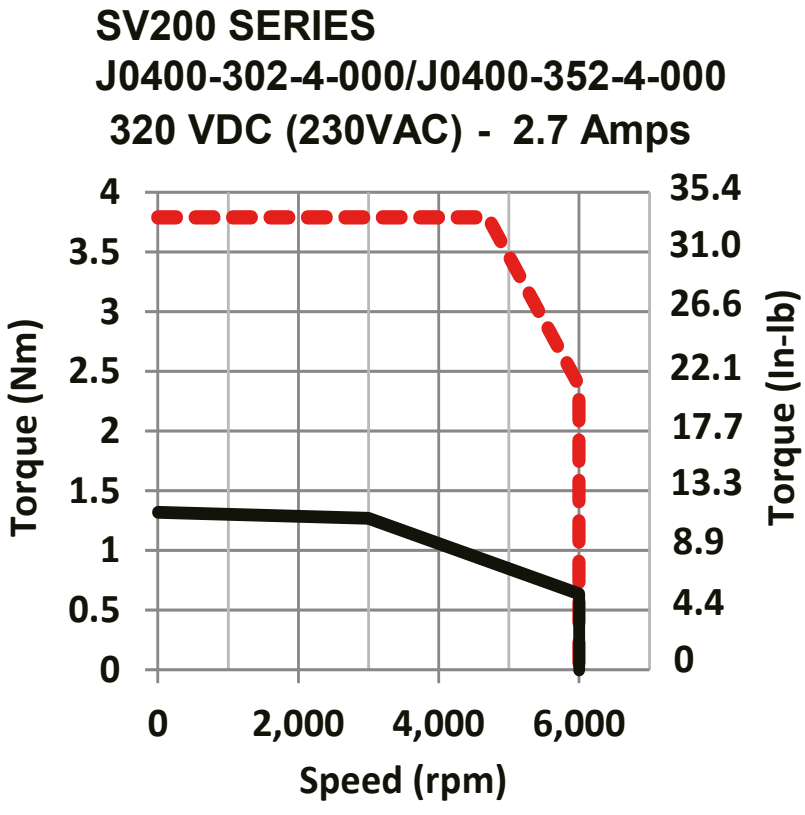



UL File	E465363
Insulation Class	Class B(130°C)
IP rating	IP65(except shaft through hole and cable end connetor)
Installation location	Indoors, free from direct sunlight, corrosive gas, inflammable gas
Ambient temperature	Operating 0 to 40°C, Storage -20 to 80°C
Ambient humidity	85%RH or lower (free from condensing)
Altitude (maximum)	Operating 1,000m
Vibration Resistance	49 m/s2
Rotor Poles	8

2.3.5 80mm Specification and Dimension

80mm Series

Series		J0750 - 750 Watt
Base Model Number (with 2500 PPR incremental encoder non-sealed plastic connectors, no brake)		J0750-302-5-000
Rated Output Power	watts	750
Rated Speed	rpm	3000
Max. Mechanical Speed	rpm	5500
Rated Torque	**In-lb**	21.24
Continuous Stall Torque	**In-lb**	23.01
Peak Torque	**In-lb**	61.07
Rated Current	A (rms)	4.5
Continuous Stall Current	A (rms)	4.9
Peak Current	A (rms)	13.5
Voltage Constant ±5%	V (rms) / K rpm	36.6
Torque Constant ±5%	Nm / A (rms)	0.543
Winding Resistance (Line-Line)	Ohm ±10% @25°C	1.47
Winding Inductance (Line-Line)	mH	8.2
Inertia (with encoder)	oz-in-sec2	0.0126
Inertia - With Brake Option	oz-in-sec2	0.0137
Thermal Resistance (mounted)	°C / W	1.04
Thermal Time Constant	Minutes	22
Heat Sink Size	mm	240 x 240 x 6 Aluminum
Shaft Load - Axial	(max.)	90 N / 20 Lb
Shaft Load - Radial (End of Shaft)	(max.)	270 N / 60 Lb
Weight (with std. encoder)		2.6 kg / 5.8 lb
Weight - With Brake Option		3.4 kg / 7.6 lb

Shaft Load: (L10 life, 20,000 hours, 2,000 RPM)

2.3.5.1 80mm Dimensions

1 Motor Dimensions – No Brake: mm

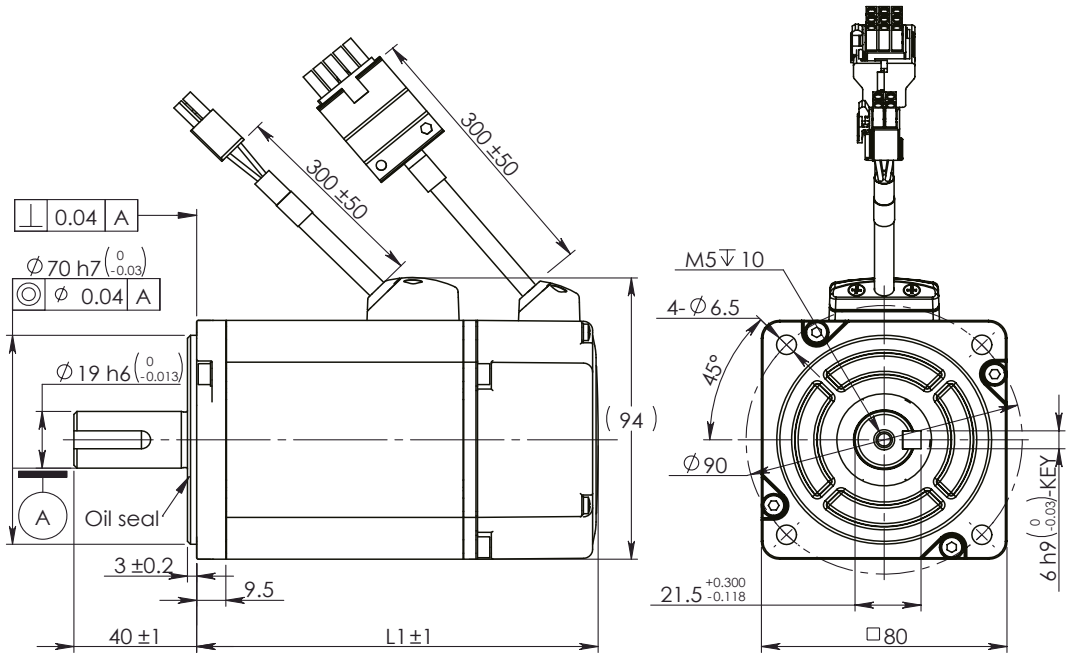

Without Brake	L1
J0750-302-5	131

2 Motor Dimensions – Brake: mm

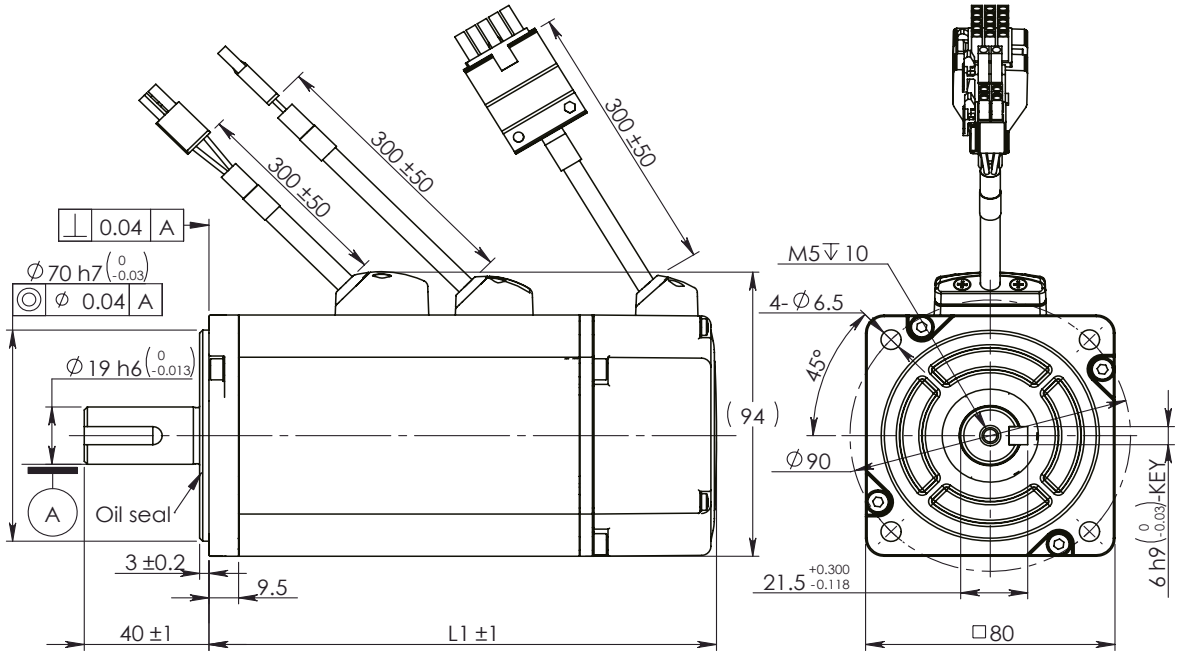

With Brake	L1
J0750-352-5	178

2.3.5.2 80mm Torque Curve

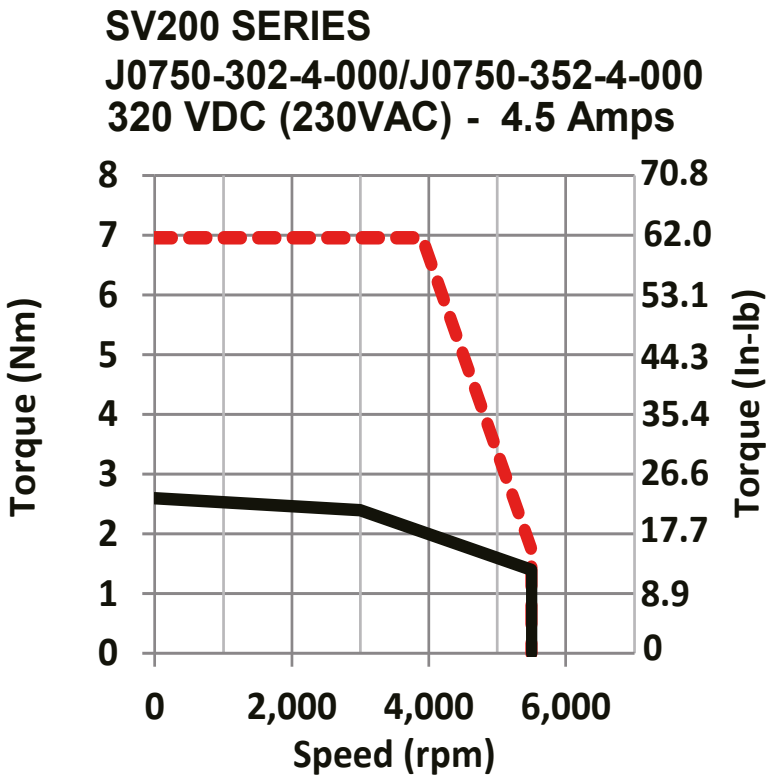

2.3.6 Servo Drive and Servo Motor Combination

2.3.6.1 120VAC Power Input

	Specificatioon		100W	200W	400W
AC Servo Motor	2500ppr Increment Encoder (14PIN AMP connector)	Without Brake	J0100-301-3-000	J0200-301-4-000	J0400-301-4-000
		With Brake	J0100-351-3-000	J0200-351-4-000	J0400-351-4-000
	Rated Speed	(RPM)	3000		
	Maximum Speed	(RPM)	6000		
	Rated Torque	(In-lb)	2.8	5.66	11.23
	Maximum Torque	(In-lb)	8.1	16.8	33.63
	Rated Current	(A)	1.65	3	5.7
	Maximum Current	(A)	4.95	9	17.1
	Rotor Inertia	oz-in-sec2	0.000606	0.00233	0.00385
	Rotor Inertia(Brake Opt)	oz-in-sec2	0.000699	0.00311	0.00461
	Insulation Class		Class B		
	Protection Class		IP65(except shaft through hole and cable end connetor)		
	Oil Seal		With Oil seal		
			Drive model Numbers		
Pulse & Direction Type	USB mini	Basic Type	SV2A3-P-NE	SV2A3-P-NE	SV2A5-P-NE
		Q type	SV2A3-Q-AE	SV2A3-Q-AE	SV2A5-Q-AE
Fieldbus Type	RS485	SCL	SV2A3-Q-RE	SV2A3-Q-RE	SV2A5-Q-RE
		Modbus RTU	SV2A3-Q-RE	SV2A3-Q-RE	SV2A5-Q-RE
	CANopen	CANopen	SV2A3-C-CE	SV2A3-C-CE	SV2A5-C-CE
	EtherNET	EtherNet/IP	SV2A3-IP-DE	SV2A3-IP-DE	SV2A5-IP-DE
		eSCL/Modbus TCP	SV2A3-Q-DE	SV2A3-Q-DE	SV2A5-Q-DE
		EtherCAT	SV2A3-EC-DE	SV2A3-EC-DE	SV2A5-EC-DE

2.3.6.2 220VAC Power Input

	Specificatioon		200W	400W	750W
AC Servo Motor	2500ppr Increment Encoder (14PIN AMP connector)	Without Brake	J0200-302-4-000	J0400-302-4-000	J0750-302-5-000
		With Brake	J0200-352-4-000	J0400-352-4-000	J0750-352-5-000
	Rated Speed	(RPM)	3000		
	Maximum Speed	(RPM)	6000		
	Rated Torque	(In-lb)	5.66	11.23	21.24
	Maximum Torque	(In-lb)	16.8	33.63	61.07
	Rated Current	(A)	1.5	2.75	4.5
	Maximum Current	(A)	4.5	8.3	13.5
	Rotor Inertia	oz-in-sec2	0.00233	0.00385	0.0126
	Rotor Inertia(Brake Opt)	oz-in-sec2	0.00311	0.00461	0.0137
	Insulation Class		Class B		
	Protection Class		IP65(except shaft through hole and cable end connetor)		
	Oil Seal		With Oil seal		
			Drive model Numbers		
Pulse & Direction Type	USB mini	Basic Type	SV2B3-P-NE	SV2B3-P-NE	SV2B5-P-NE
		Q type	SV2B3-Q-AE	SV2B3-Q-AE	SV2B5-Q-AE
Fieldbus Type	RS485	SCL	SV2B3-Q-RE	SV2B3-Q-RE	SV2B5-Q-RE
		Modbus RTU	SV2B3-Q-RE	SV2B3-Q-RE	SV2B5-Q-RE
	CANopen	CANopen	SV2B3-C-CE	SV2B3-C-CE	SV2B5-C-CE
	EtherNET	EtherNet/IP	SV2B3-IP-DE	SV2B3-IP-DE	SV2B5-IP-DE
		eSCL/Modbus TCP	SV2B3-Q-DE	SV2B3-Q-DE	SV2B5-Q-DE
		EtherCAT	SV2B3-EC-DE	SV2B3-EC-DE	SV2B5-EC-DE

2.4 System Configuration

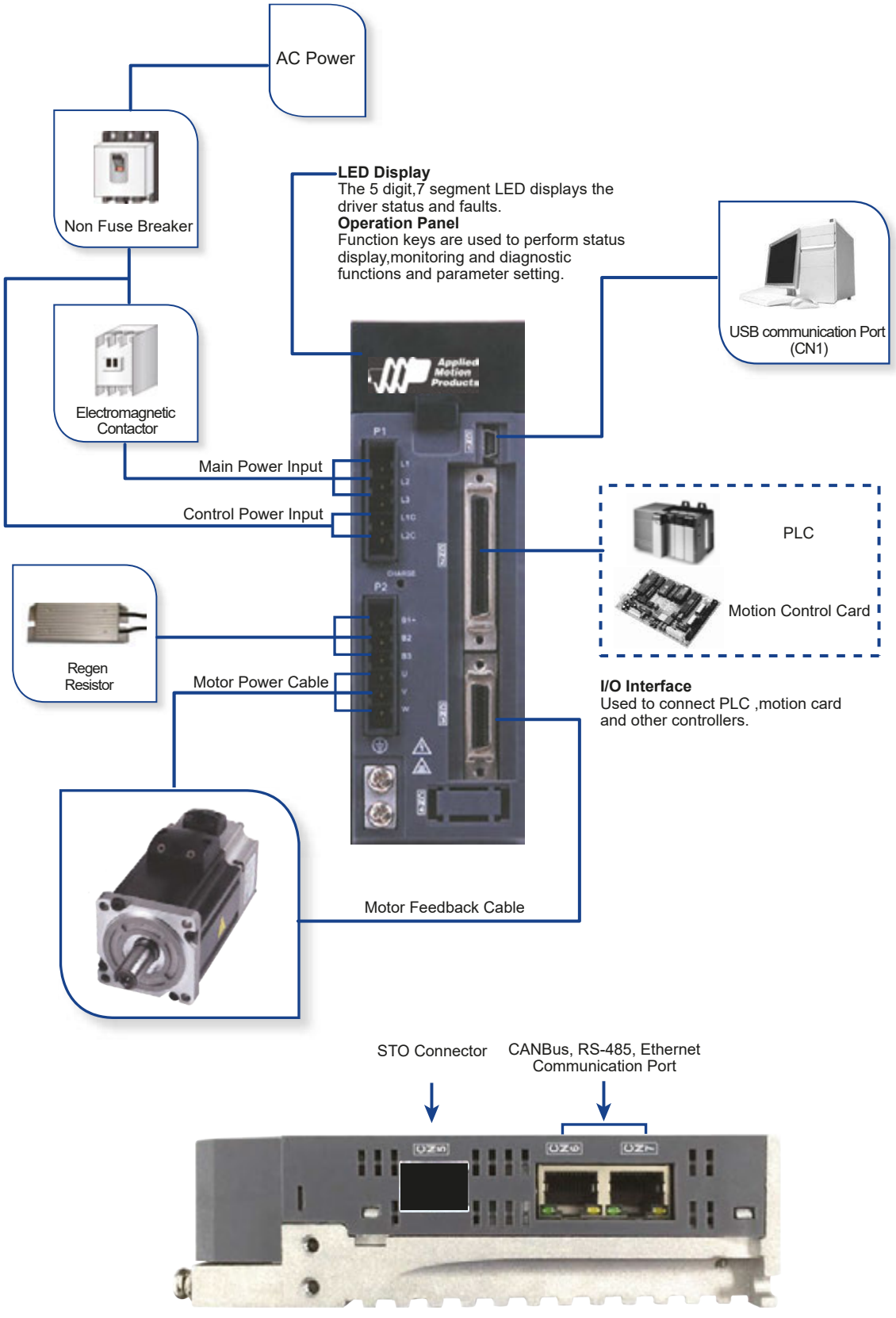

3 Installation

3.1 Storage Conditions

- Store within an ambient temperature range of -20°C to +65°C.
- Store within a relative humidity range of 10% to 85% and non-condensing
- DO NOT store in a place subjected to corrosive gasses

3.2 Installation Conditions

- Temperature range of 0°C to 40°C. If the ambient temperature of servo drive is greater than 40°C, please install the drive in a well-ventilated location.
- The ambient temperature of servo drive for long-term reliability should be under 40°C.
- The servo drive and motor will generate heat; if they are installed in a control panel, pleaseensure sufficient space around the units for heat dissipation.
- Operation within a relative humidity range of 10% to 85% and non-condensing
- Watch for a vibration level lower than 6m/s2, 10Hz-60Hz.
- DO NOT mount the servo drive and motor in a location subjected to corrosive gasses or flammable gases, and combustibles.
- Mount the servo drive to an indoor electric control cabinet.
- DO NOT mount the servo drive in a location subjected to airborne dust.

3.3 Installation Space

- Incorrect installation may result in a drive malfunction or premature failure of the drive and or motor. Please follow the guidelines in this manual when installing the servo drive and motor.
- The SV200 servo drive should be mounted perpendicular to the wall or in the control panel.
- In order to ensure the drive is well ventilated, ensure that the all ventilation holes are not obstructed and sufficient free space is given to the servo drive.
- Please ensure grounding wires are securely connected

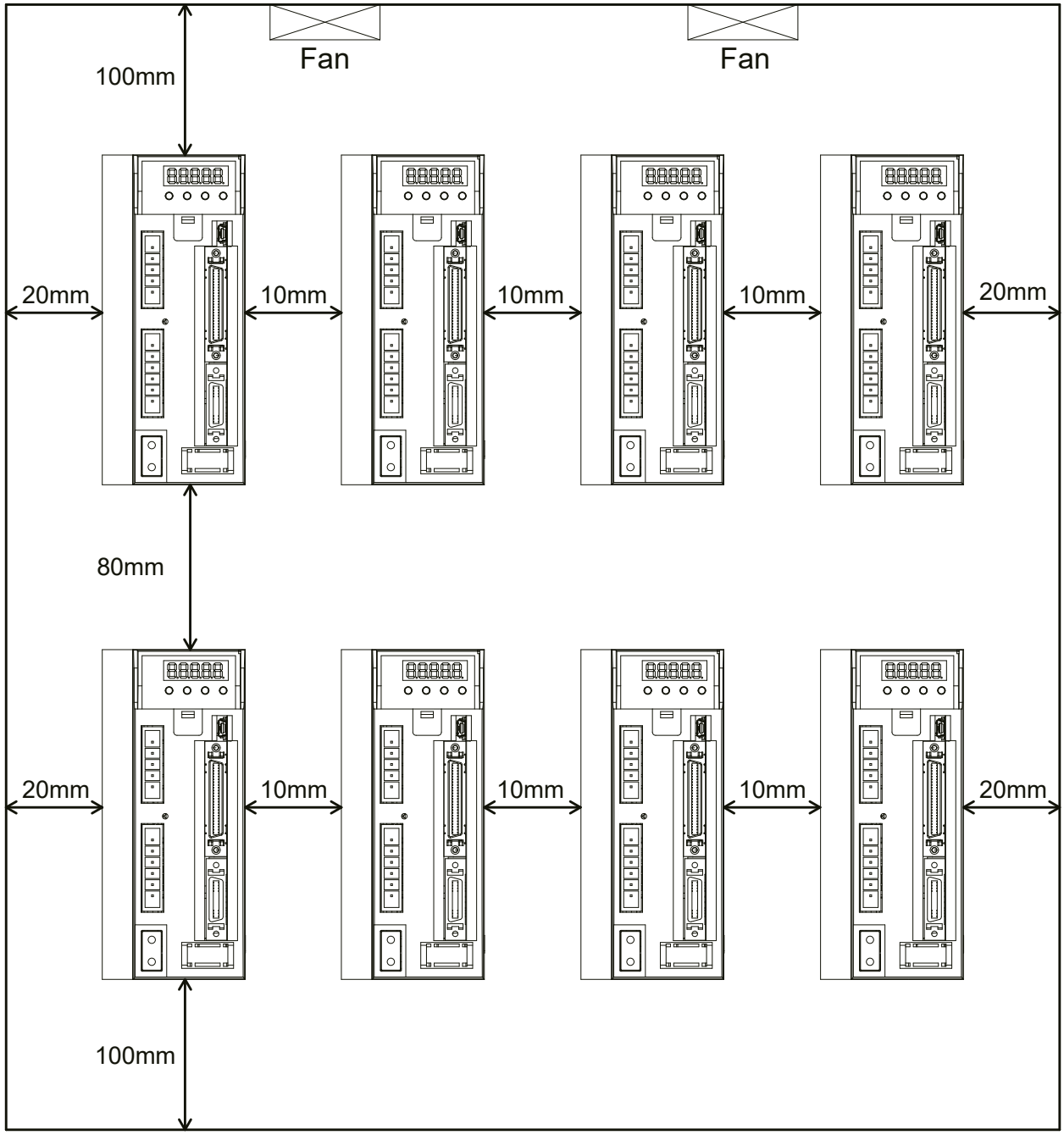

3.4 Motor Installation

- DO NOT strike the motor when mounting as the motor shaft or encoder may be damaged.

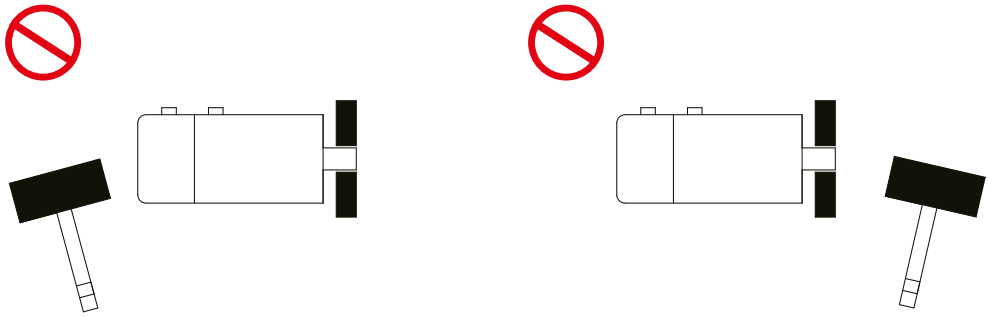

- DO NOT use cables soaked in water or oil.
- Avoid excess cable stress at the cable outlets.
- Use flexible cables when using cable carrier, make sure the minimum cable bending diameter is 100mm.
- The shaft through-hole and cable end connector are not IP65.

4 Connections and Wiring

4.1 Connecting to Peripheral Devices

4.1.1 System Configuration

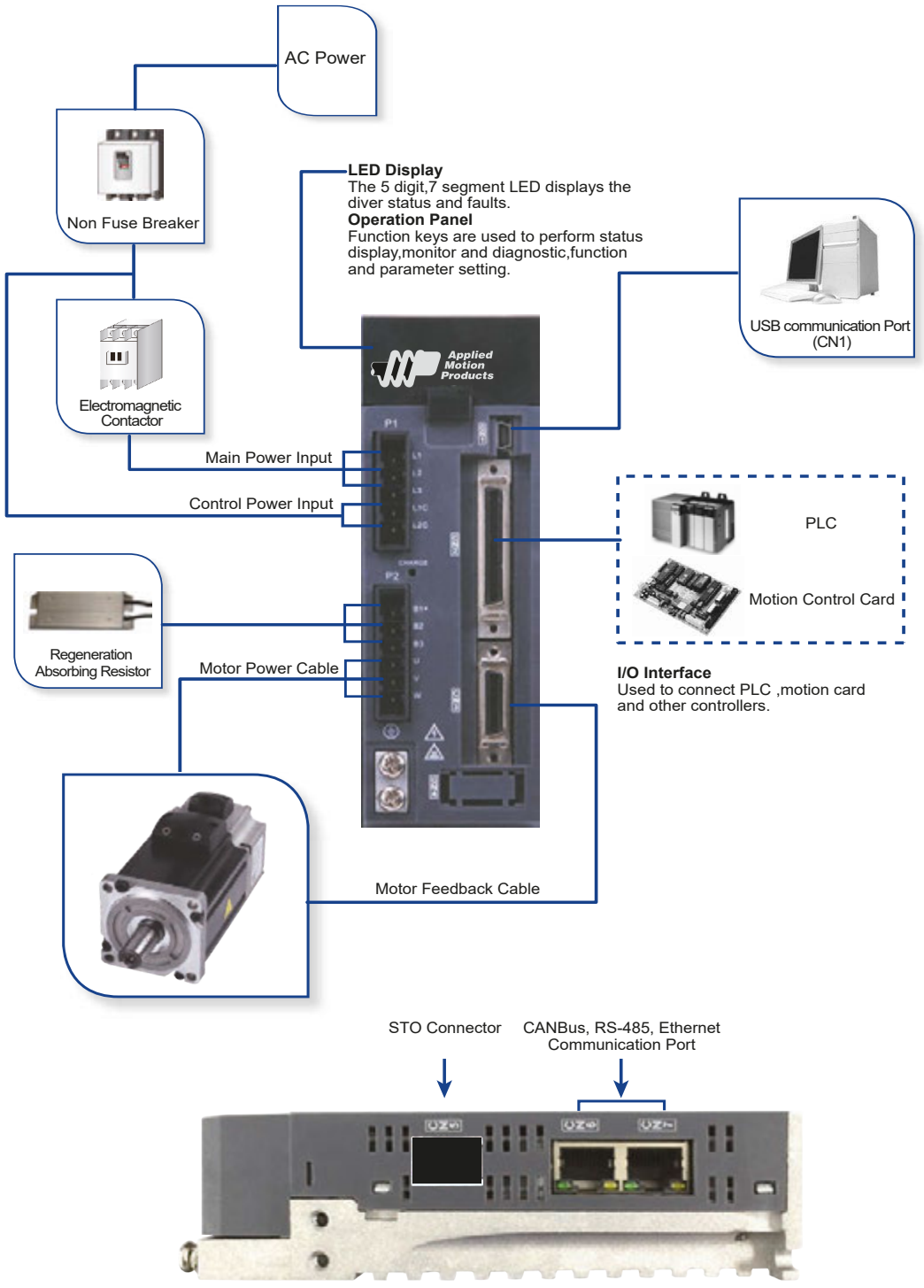

4.1.2 Servo Drive Connectors and Terminals

<table>
<tr><th>Terminal Identification</th><th>Description</th><th colspan="3">Details</th></tr>
<tr><td rowspan="2">P1</td><td>L1, L2, L3</td><td colspan="3">Used to connect three-phase AC main circuit power</td></tr>
<tr><td>L1C, L2C</td><td colspan="3">Used to connect single-phase AC for control circuit power</td></tr>
<tr><td rowspan="6">P2</td><td rowspan="4">U, V, W</td><td colspan="3">Used to connect servo motor</td></tr>
<tr><td>Terminal Symbol</td><td>Wire color</td><td>Description</td></tr>
<tr><td>U</td><td>Red</td><td rowspan="3">Connecting to three-phase motor main circuit cable</td></tr>
<tr><td>V</td><td>Yellow</td></tr>
<tr><td>W</td><td>Blue</td></tr>
<tr><td rowspan="2">B1+, B2, B3
Regenerative resistor terninals</td><td>Internal Resistor</td><td colspan="2">Ensure the circuit is closed between B2 and B3, and the circuit is open between B1+ and B3.</td></tr>
<tr><td>External Resistor</td><td colspan="2">Ensure the circuit is open between B2 and B3, and connect the external regenerative resistor between B1+ and B2.</td></tr>
<tr><td>CN1</td><td>Communication Port</td><td colspan="3">User to connect personal computer</td></tr>
<tr><td>CN2</td><td>I/O Connector</td><td colspan="3">Used to connect external controllers.</td></tr>
<tr><td>CN3</td><td>Encoder Feedback Connector</td><td colspan="3">Used to connect encoder of servo motor.</td></tr>
<tr><td>CN4</td><td>Reserved</td><td colspan="3"></td></tr>
<tr><td>CN5</td><td>Safe-Torque Off (STO) connector</td><td colspan="3">Install pre-wired mating connector before attempting to enable servo drive</td></tr>
<tr><td>CN6</td><td>RS-485/CANopen
*RS-232 Communication Port</td><td colspan="3">RJ45 connector, Daisy Chain, Used for RS-485/CANopen
*RS-232 Communication Port (-Q Type Only)</td></tr>
<tr><td>CN7</td><td>RS-485/CANopen Communication Port</td><td colspan="3">RJ45 connector, Daisy Chain, Used for RS-485/CANopen Communication</td></tr>
</table>

4.1.3 Connections and Wiring Notes

- Ensure grounding wires are securely connected, 14 AWG wire is recommended.
- Grounding method must be single-point grounding.
- Ensure L1/L2/L3 and L1C/L2C are correctly wired, and voltage supplies are within the specification range.
- Ensure U/V/W is following the order of RED/YELLOW/BLUE.
- Setup emergency stop circuitry to switch off the power supply when fault occurs.
- DO NOT touch drive or motor's connector terminals 5 minutes after drive and motor is powered off. Large capacitors within the unit will be discharged slowly.
- Install the encoder cables in a separate conduit from the motor power cables to avoid signal noise. Separate the conduits by 30cm (11.8inches).
- Use stranded twisted-pair wires or multi-core shielded-pair wires for encoder feedback cables.
- The maximum length of encoder (PG) feedback cables is 15 meters.

4.1.4 Wiring Methods For Power supply P1

The SV200 series servo drive supports single phase or three phase wiring. Three phase wiring for drives 750W or above is recommended. For single-phase wiring, use L1 and L3 terminals as shown in wiring diagram below.

4.1.4.1 Single-Phase Power Supply Connection (120VAC and 220VAC)

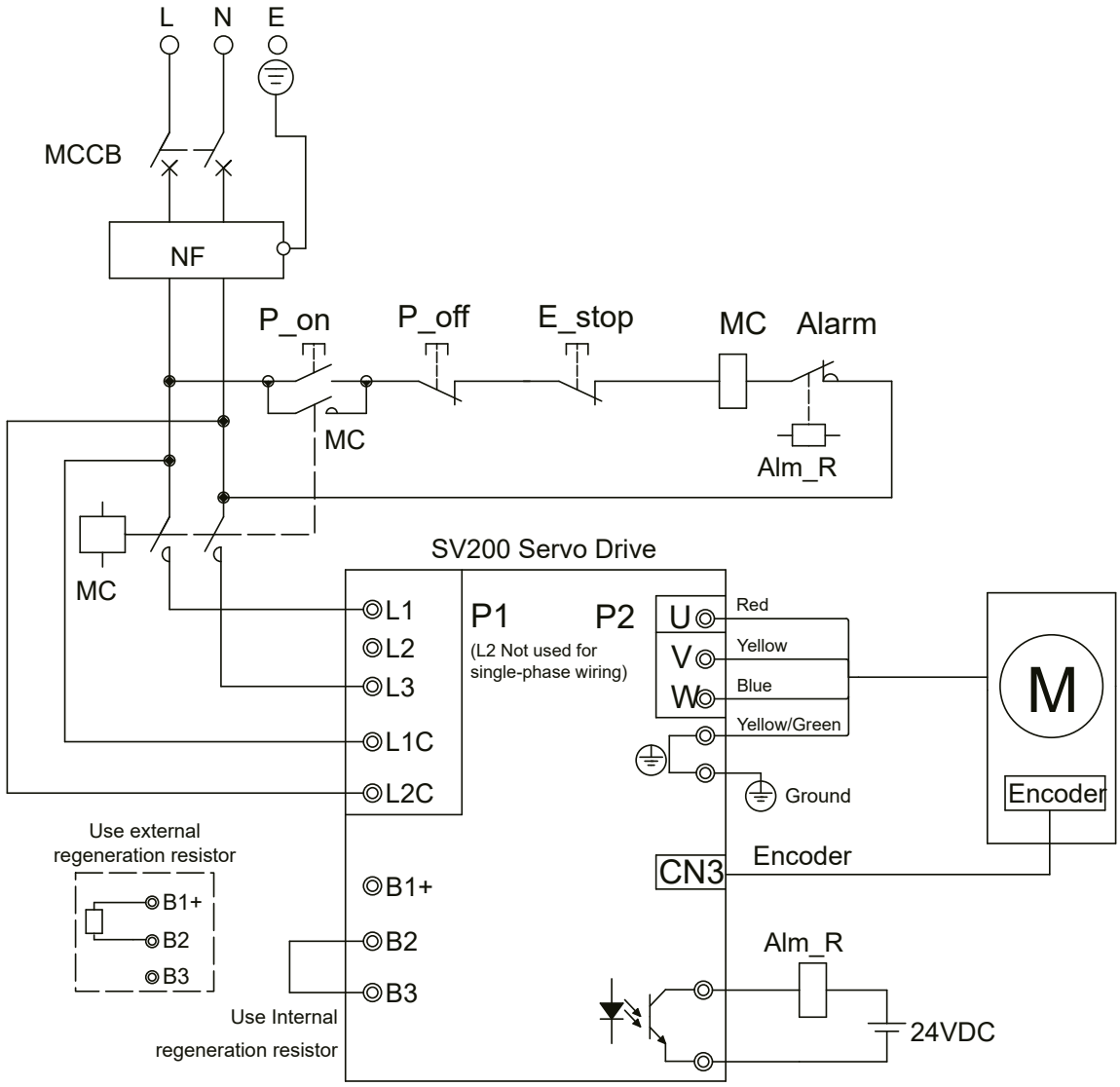

Note:

Symbol	Description
MCCB	Circuit Breaker
NF	Noise Filter
P_on	Power On Switch
P_off	Power Off Switch
E_stop	Emergency Stop Switch
MC	Magnetic Contactor
Alm_R	Alarm Relay
Alarm	Alarm Relay Contactor

4.1.4.2 Three-Phase Power Supply Connection (AC220V)

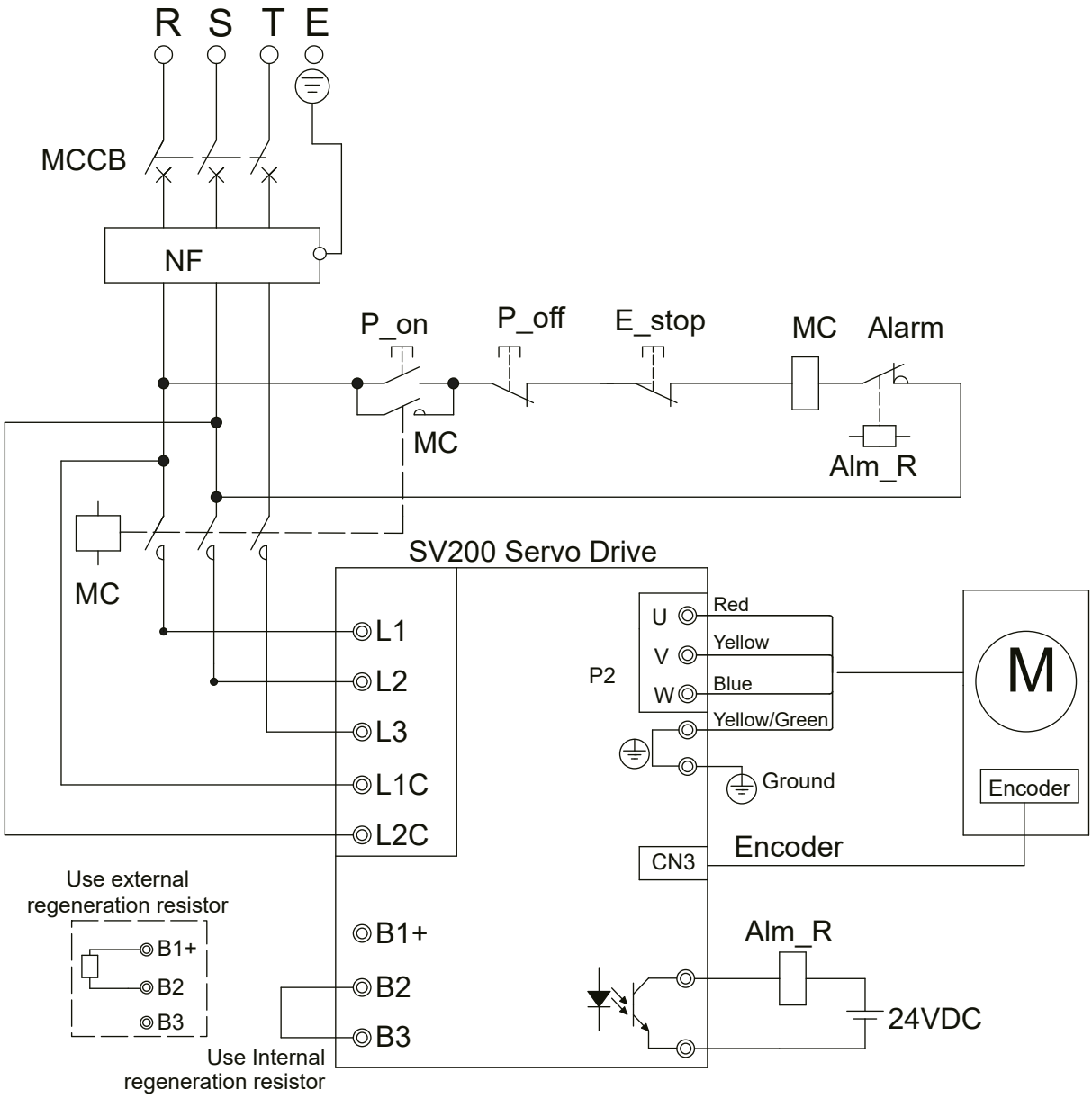

Note:

Symbol	Description
MCCB	Circuit Breaker
NF	Noise Filter
P_on	Power On Switch
P_off	Power Off Switch
E_stop	Emergency Stop Switch
MC	Magnetic Contactor
Alm_R	Alarm Relay
Alarm	Alarm Relay Contactor

4.2 Wiring to the Connector P2

4.2.1 Motor Power Cable Configuration

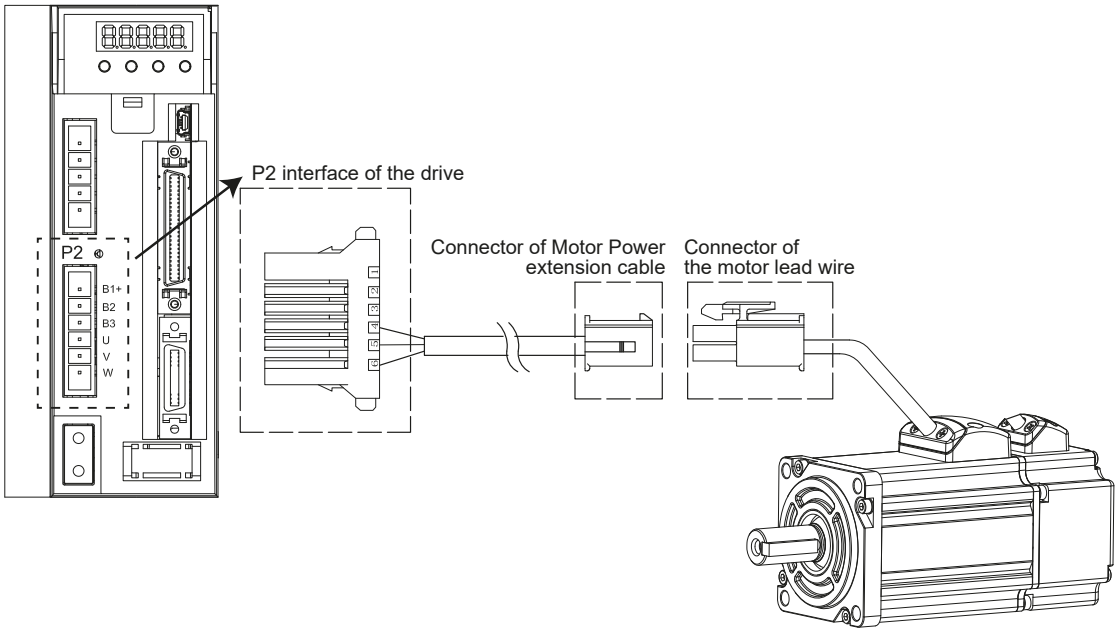

PIN	1	2	3	4
Signal	U	V	W	PE
Color	Red	Yellow	Blue	Yellow/Green

NOTE: Please refer to the Motor Power Cable Connector Specifications for details

4.2.2 Motor Power Cable Connector Specifications

PIN Assignment

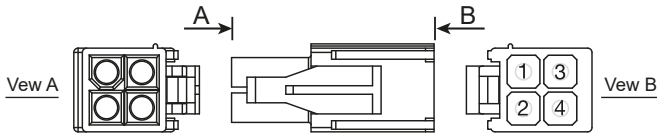

Type	Motor Side(Plug)	Plug-in(Housing)
Housing	AMP 172167-1	AMP 172159-1
Terminal	AMP 170360-1	AMP 170362-1

Model of Motor Connector

Drive Side(P2)	Signal	Color	Motor Side(Housing)
06JFAT-SBXGF-I			AMP 172159-1
4	U	Red	1
5	V	Yellow	2
6	W	Blue	3
Grounding Screw	PE	Yellow/Green	4

4.2.3 Wiring Diagram Of Motor Extension Cable

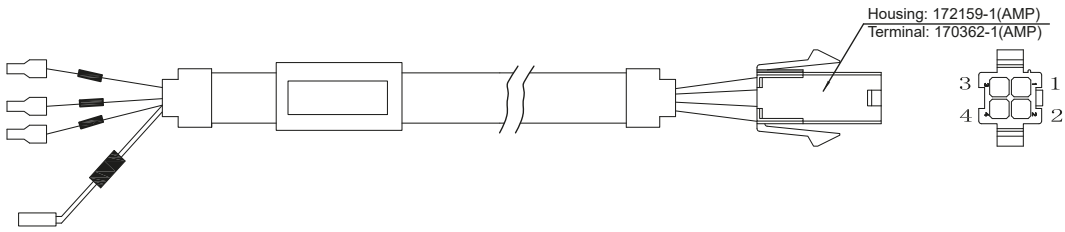

NOTE: Ensure U/V/W is following the order of RED/YELLOW/BLUE.

4.3 Encoder Connector CN3

4.3.1 Motor Encoder Feedback Cable Configuration

The CN3 connector is intended for use with the encoder extension cables that are offered with the J series servo motors.

4.3.2 The Layout of CN3 Connector

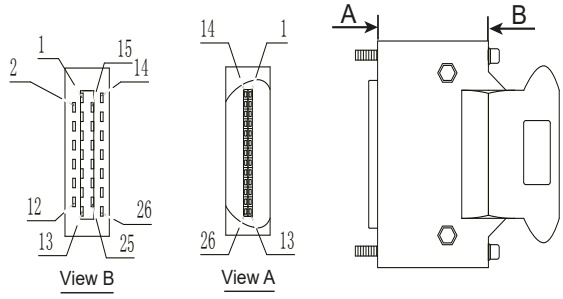

Pin NO.	Symbol	Description
1	A+	Encoder A+
2	B+	Encoder B+
3	Z+	Encoder Z+
4	U+	Hall U+
5	W+	Hall W+
6	U-	Hall U-
7	W-	Hall W-
11	Encoder +5V	Encoder power supply +5V
13	Encoder +5V	Encoder power supply +5V
14	A-	Encoder A-
15	B-	Encoder B-
16	Z-	Encoder Z-
17	V+	Hall V+
19	V-	Hall V-
24	GND	Encoder power supply ground
26	Shield	Shield

4.3.3 Connect to Motor Encoder

Connect to 2500ppr Increment Encoder (15PIN AMP connector)

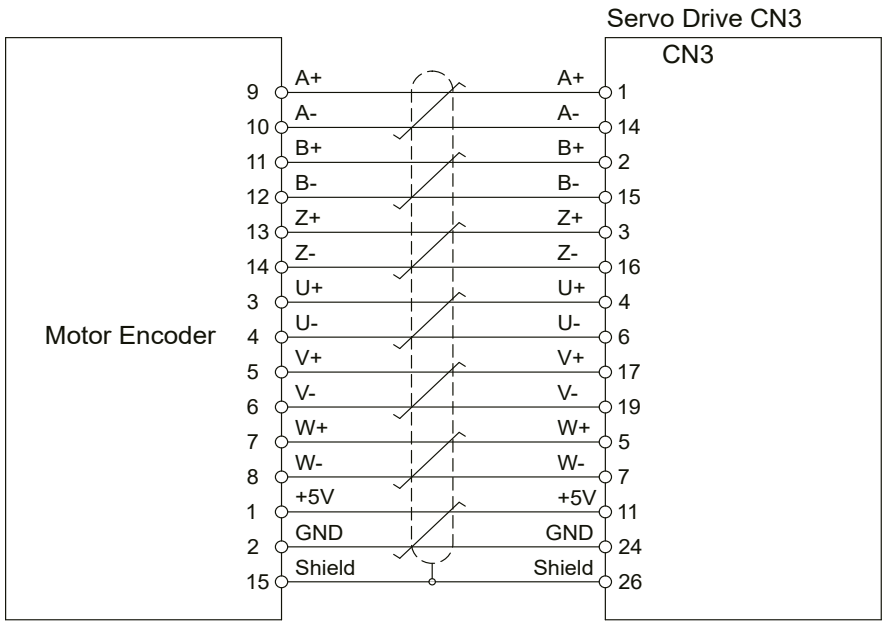

4.3.4 Specifications of Encoder Connector

4.3.5 15PIN AMP Connector

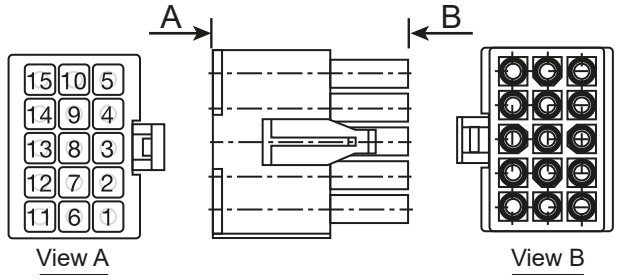

PIN Assignment

PIN#	Signal	Colour
1	+5V	Red
2	GND	Black
3	U+	Brown
4	U-	Brown/Black
5	V+	Gray
6	V-	Gray/Black
7	W+	White
8	W-	White/Black
9	A+	Blue/Black
10	A-	Blue
11	B+	Green
12	B-	Green/Black
13	Z+	Yellow
14	Z-	Yellow/Black
15	Shield	Shield

Specifications of 15PIN AMP Connector

Type	Plug of the Motor	Housing for the motor
Housing	AMP 172171-1	AMP 172163-1
Terminal	AMP 770835-1	AMP 770834-1

4.3.6 Wiring Diagram of Motor Encoder Extend Cable

B. Diagram of 15PIN Encoder Cable

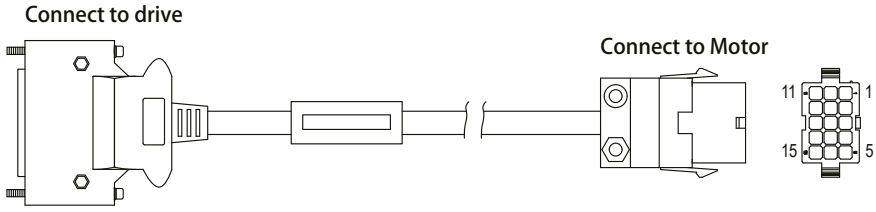

Drive Side	Signal	Colour	Housing for the motor
3M 26PIN PIN			AMP 172163-1
11	+5V	Red	1
24	GND	Black	2
4	U+	Brown	3
6	U-	Brown/Black	4
17	V+	Gray	5
19	V-	Gray/Black	6
5	W+	White	7
7	W-	White/Black	8
1	A+	Blue/Black	9
14	A-	Blue	10
2	B+	Green	11
15	B-	Green/Black	12
3	Z+	Yellow	13
16	Z-	Yellow/Black	14
26	Shield	Shield	15

4.4 Electromagnetic Brake

When motor drives a vertical axis, a brake should be used to prevent the load from falling by gravity when power is removed.

NOTE: Only use servo motor brake for holding when motor is disabled or AC is off.

4.4.1 Wiring Diagram

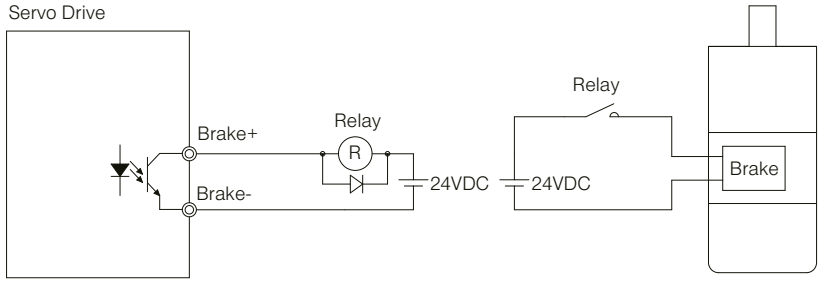

4.4.2 Brake Motor

When no power is applied to the electromagnetic brake, it is in locked position. Therefore, the motor shaft will not be able to rotate.

The brake coil has no polarity.

During the brake/release action, you might hear a clicking sound. This is normal..

Specification of brakes are as follows:

	Motor Power				
Type	50W	100W	200W	400W	750W
Holding Torque (Nm)	0.35		2		4.5
Coil Current (A)	0.25		0.38		0.61
Rated Voltage (V)	24V±10%				
Release Time	<25ms				
Engage Time	<25ms				
Release Voltage (V)	Release Voltage18.5VDC				

4.4.3 Timing Charts Of The Electromagnetic Brake

In order to prevent damage to the brake, there are delay sequences during the brake operation.

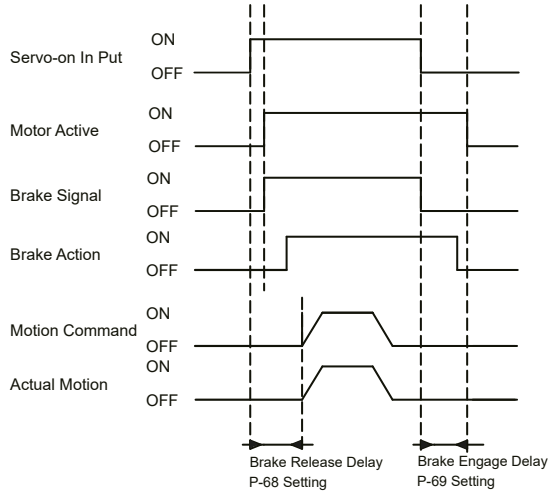

Brake engage/disengage delay time can be set via SVX ServoSUITE®, or on the drive directly via P function: P-69 (BD) or P-70 (BE).

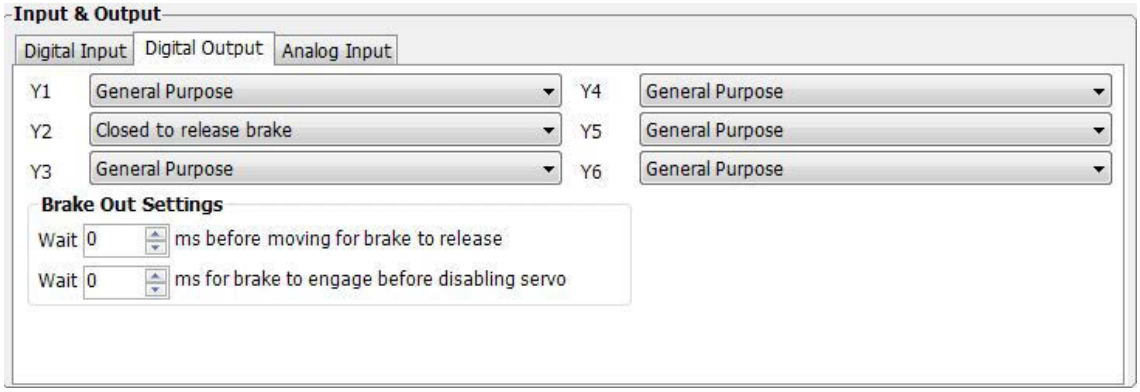

4.5 Regenerative Resistor

In SV200 series AC servo drives, there is a pre-installed 40W (SV2x5 model: 60W) regeneration resistor. In some applications, the pre-installed regeneration resistor may be insufficient to absorb the regenerative energy. In these cases, a larger wattage regeneration resistor needs to be connected externally.

Ensure the circuit is closed between B2 and B3,and the circuit is open between B1+ and B3 when using internal resistor.	Ensure the circuit is opened between B2 and B3,and connect regenerative resistor between B1+ and B2 when using external resistor.
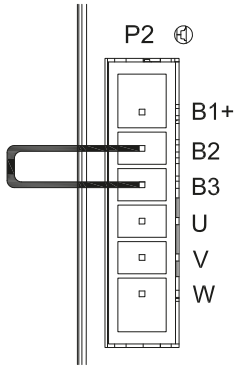	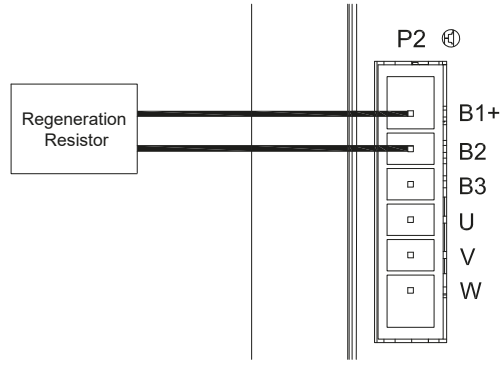

4.6 Recommended Cable Specifications

- For the drive's main circuit, please use wires rated at least 600VAC.
- Recommended wire selections are as follows:

Servo Drive And Coresponding Motor Model		Wire Width mm^S (AWG)			
		L1/L2/L3	L1C/L2C	U/V/W	B1+,B3
SV2x2	J0050-3XX-X-XXX	1.25 (AWG16)	1.25 (AWG16)	1.25 (AWG16)	2.0 (AWG14)
	J0100-3XX-X-XXX	1.25 (AWG16)	1.25 (AWG16)	1.25 (AWG16)	2.0 (AWG14)
	J0200-3XX-X-XXX	1.25 (AWG16)	1.25 (AWG16)	1.25 (AWG16)	2.0 (AWG14)
SV3x3	J0400-3XX-X-XXX	2.0 (AWG14)	2.0 (AWG14)	2.0 (AWG14)	2.0 (AWG14)
SV2x5	J0750-3XX-X-XXX	3.5 (AWG12)	3.5 (AWG12)	3.5 (AWG12)	3.5 (AWG12)

4.7 Connect to Host Computer, CN1

Port CN1 is used to connect drive with PC. Use SVX ServoSUITE® software to set control mode, change parameter values, and use auto-tuning function and so on.

PIN	Symbol	Function
1	+5V	+5V Power Supply
2	D-	Data -
3	D+	Data +
4	—	Reserved
5	GND	Ground

4.8 Input and Output Signal Interface Connector, CN2

4.8.1 Input and Output Interface Specifications and Diagram

Port CN2 on SV200 series AC servo drives is used for input/output signals. Details are shown in table below:

I/O Signals	Digital Signal	Inputs	8 Configurable Optically isolated general Inputs, 5-24VDC, 20mA 4 Configurable Optically isolated High Speed inputs
		Outputs	4 Configurable Optically isolated general Outputs, max 30VDC, 20mA 1 Alarm Output, max 30VDC, 20mA. 1 motor brake control output, max 30VDC, 100mA .
	Analog Signal	Inputs	2 Analog Inputs, with 12bit resolution
	Pulse Signal	Inputs	2 Optically isolated high speed inputs 500Hz (Open collector) 2 high speed differential inputs 2MHz
		Outputs	4 high speed encoder feedback output (3 Line Driver A/B/Z, and 1 open collector output Z)

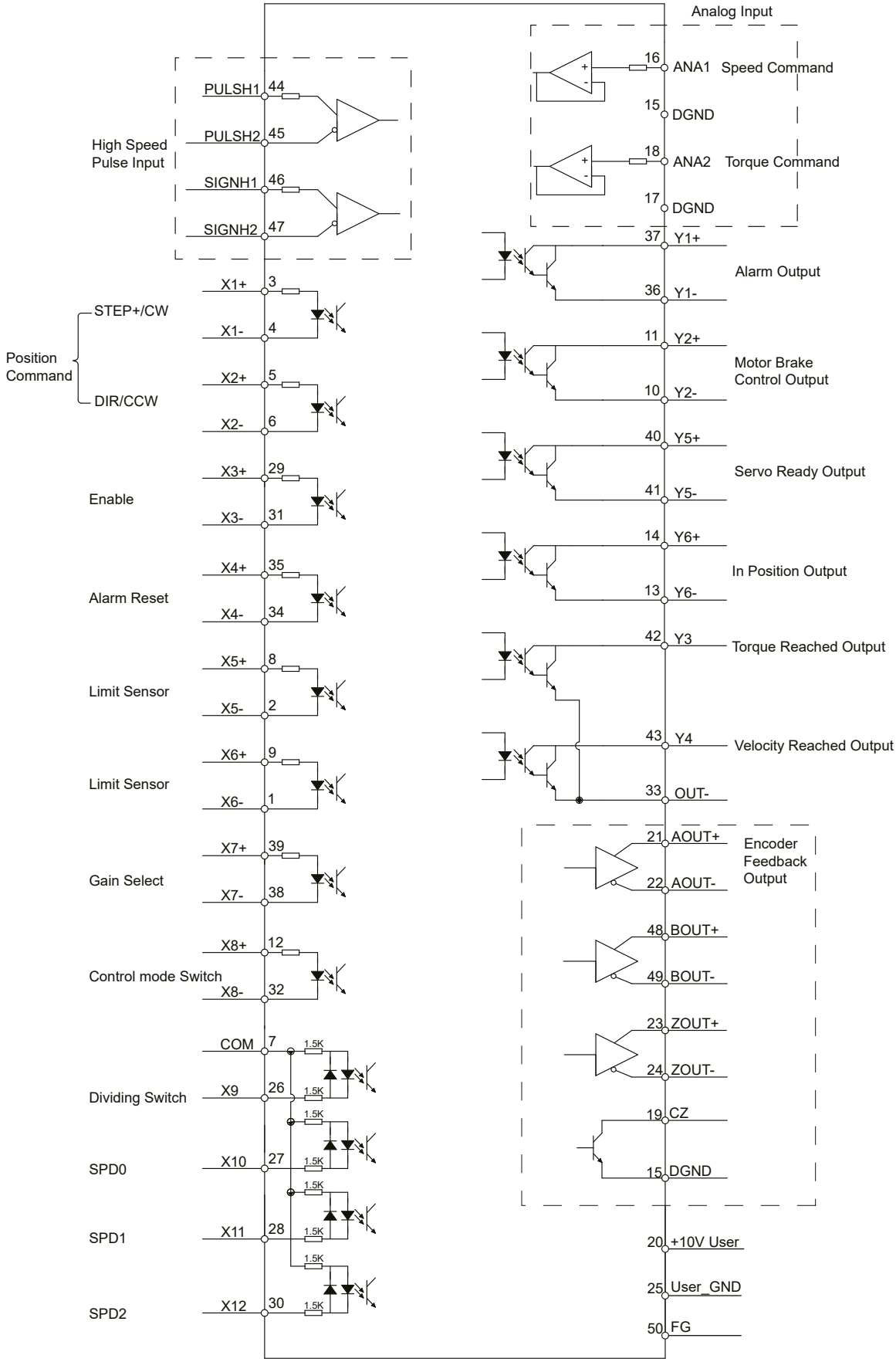
Analog Input
16 ANA1 Speed Command
15 DGND
18 ANA2 Torque Command
17 DGND
High Speed Pulse Input
PULSH1 44
PULSH2 45
SIGNH1 46
SIGNH2 47
Position Command
STEP+/CW
DIR/CCW
X1+ 3
X1- 4
X2+ 5
X2- 6
Enable
X3+ 29
X3- 31
Alarm Reset
X4+ 35
X4- 34
Limit Sensor
X5+ 8
X5- 2
Limit Sensor
X6+ 9
X6- 1
Gain Select
X7+ 39
X7- 38
Control mode Switch
X8+ 12
X8- 32
COM 7
Dividing Switch
X9 26
SPD0
X10 27
SPD1
X11 28
SPD2
X12 30
1.5K
37 Y1+
36 Y1-
Alarm Output
11 Y2+
10 Y2-
Motor Brake Control Output
40 Y5+
41 Y5-
Servo Ready Output
14 Y6+
13 Y6-
In Position Output
42 Y3
Torque Reached Output
43 Y4
33 OUT-
Velocity Reached Output
21 AOUT+
22 AOUT-
48 BOUT+
49 BOUT-
23 ZOUT+
24 ZOUT-
19 CZ
15 DGND
Encoder Feedback Output
20 +10V User
25 User_GND
50 FG

4.8.2 Signals Description of Connector CN2

4.8.2.1 The Layout of CN2 Connector

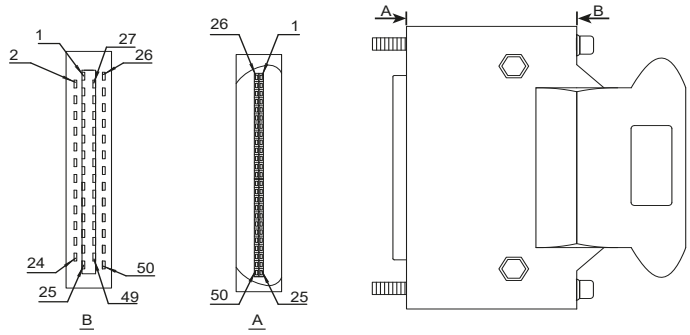

4.8.2.2 Input Signals

SV200 series AC servo drive has 12 configurable digital inputs as well as 2 analog inputs.

Each of the inputs can be specified with different function via parameter settings. The functions are as follows:

- Specified function signals: i.e. STEP/DIR signal, motor enable/disable signals.
- General purpose signal: In velocity mode, torque mode, Q program mode, or SCL mode, it is used as general purpose signal with no specified functions:

Signal	Symbol	Pin NO.	Details
X1	X1+	3	This input has three functions: Accept STEP pulse input such as STEP signals, CW pulse, A pulse in Position mode. Run/Stop input in torque or velocity mode. General purpose input.
	X1-	4	
X2	X2+	5	This input has three functions: Accept STEP pulse input such as Direction signals, CCW pulse, B pulse in position mode. Direction input in torque or velocity mode. General purpose input.
	X2-	6	
X3	X3+	29	Enable/Disable input. General purpose input.
	X3-	31	
X4	X4+	35	Alarm Reset Input, used to reset drive alarm. General purpose input.
	X4-	34	
X5	X5+	8	Limit Sensor Input. General purpose input.
	X5-	2	
X6	X6+	9	Limit Sensor Input. General purpose input.
	X6-	1	
X7	X7+	39	Gain Select Input in all control mode. General purpose input.
	X7-	38	
X8	X8+	12	Switch Control mode between main mode and second mode. General purpose input.
	X8-	32	
X9	X9	26	Dividing Switch, change the pulses per revolution for electronic Gearing. General purpose input.

X10	X10	27	● Pulse Inhibited Input. Ignore the pulse input when this input is activated in position mode. ● Speed Selecting Input 1 in change Speed mode. ● General purpose input.
X11	X11	28	● Speed Selecting Input 2 in change Speed mode. ● General purpose input.
X12	X12	30	● Speed Selecting Input 3 in change Speed mode. ● General purpose input.
COM	COM	7	X9-X12 COM point.
High-Speed Pulse Inputs	PULSH1	44	High-speed pulse inputs (+5VDC line drive input).The max. input frequency is 2MHz. Three different pulse command can be selected: ● Pulse & Direction ● CW Pulse and CCW Pulse ● A Quadrature B pulse (NOTE: DO NOT use it with X1/X2 both.)
	PULSH2	45	
	SIGNH1	46	
	SIGNH2	47	
Analog Input Signal 1	ANA1	16	● In velocity command mode in analog velocity mode. The offset ,dead band, function of analog input 1 can be set by SVX ServoSUITE® or parameters P-51, P-55 and P-60. ● Sets or requests the analog Input gain that relates to motor position when the drive is in analog position command mode. ● Sets or requests the gain value used in analog velocity mode. ● General Analog Input in Q mode.
	DGND	15	Digital Ground for Analog input.
Analog Input Signal 2	ANA2	18	● In torque command mode in analog torque mode. The offset ,dead band, function of analog input 2 can be set by SVX ServoSUITE® or parameters P-53,P-57 and P-61. ● General Analog Input in Q mode
	DGND	17	Digital Ground for Analog input.

4.8.2.3 Inputs Function List

	1	2	3	4	5	6	7	8	9	10	11	12
Step	■											
DIR		■										
CW Limit					●							
CCW Limit						●						
Start/Stop	▲▼											
Direction		▲▼										
Servo enable			●									
Alarm clear				●								
Speed selection 1,2,3										▲	▲	▲
Global gain selection							■					
Control mode selection								●				
Pulse encoder Resolution selection									■			
Pulse Inhibit										■		
General Input	●	●	●	●	●	●	●	●	●	●	●	●

■ – Position Mode ▲– Velocity Mode ▼– Torque Mode ● – All Modes

4.8.2.4 Output Signals

SV200 series AC servo drive has 6 programmable digital output signals available; each of the outputs can be specified with different function via parameter settings.

Signal	Symbol	Pin NO.	Details
Y1	Y1+	37	This output has two functions: ● Alarm Output. ● General purpose output.
	Y1-	36	
Y2	Y2+	11	This output has two functions: ● Motor brake control output. ● General purpose output.
	Y2-	10	
Y3	Y3+	42	● Torque Reached Output. ● General purpose output.
	Y3-	33	
Y4	Y4+	43	● Moving signal output, output signal when dynamic position error less than set value in position mode. ● Velocity Reached output. Output signal when actual speed is same as the target speed and the speed ripple less than ripple range. ● General purpose output.
	Y4-	33	
Y5	Y5+	40	● Servo ready output. Output servo ready signal when the drive is ready to be controlled and without alarm. ● General purpose output.
	Y5-	41	
Y6	Y6+	14	● In position signal output, output signal when in position, and the position error less than set value in position mode. ● Tach out output. Tach output, produces pulses relative to the motor position with configurable resolution. ● General purpose output.
	Y6-	13	
Encoder pulse feedback Output	AOUT+	21	The encoder feedback phase A line drive output.
	AOUT-	22	
	BOUT+	48	The encoder feedback phase B line drive output.
	BOUT-	49	
	ZOUT+	23	The encoder feedback phase Z line drive output.
	ZOUT-	24	
	ZOUT	19	The encoder feedback phase Z output. (Open collector)
+10V Output	+10V User	20	+10VDC user ,max 100mA
	USER_GND	25	+10VDC user Ground

4.8.2.5 Outputs Function List

Output Pin		Y1	Y2	Y3	Y4	Y5	Y6
Function	Alarm Output	●					
	In Postion error						●
	Dynamic Postion error				■		
	Tach Out						●
	Brake		●				
	Torque Reach			●			
	Servo Ready			●			
	Servo-On Status					●	
	Velocity Reach				▲▼		
	General Output	●	●	●	●	●	●

■ – Position Mode ▲– Velocity Mode ▼– Torque Mode ● – All Modes

4.8.3 Input Signal Interface Connector CN2

4.8.3.1 Position pulse signal input

SV200 series AC servo has two high speed pulse inputs, STEP/DIR and PULSH/SIGNH. STEP/DIR supports 5-24VDC up to 500kHz open collector input signal or differential input signal through line driver. PULSH/SIGNH supports 5VDC up to 2MHz with differential line driver input.

NOTE: STEP/DIR and PULSH/SIGNH CANNOT be used at the same time.

A. Open Collector Input Signal Diagram

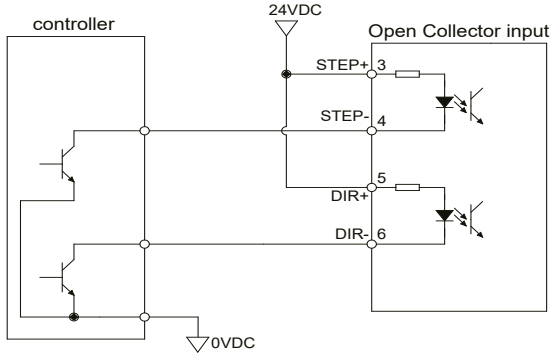

B. Differential Input Signal Diagram

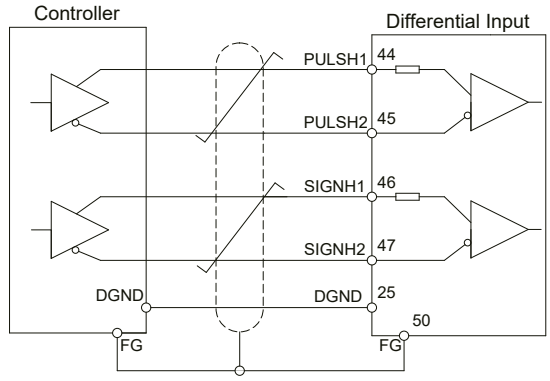

C.High Speed Differential Signal Input Diagram

ONLY use 5V supply for PULSH/SIGNH input, DO NOT use 24V.

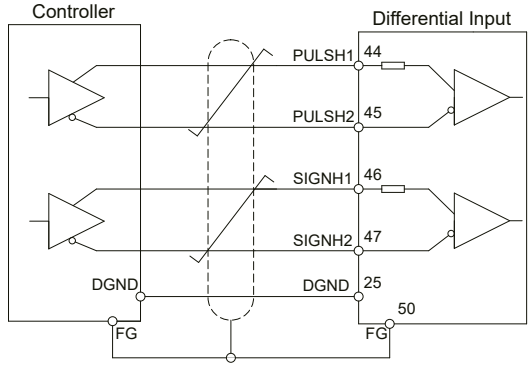

D. Pulse Input Description

STEP/DIR Pulse Input

When both STEP and DIR input signal is ON, the motor will rotate in one direction

When STEP input signal is ON, and DIR input signal is OFF, the motor will rotate in the opposite direction.

*Direction signal (DIR) can be configured via SVX ServoSUITE® software.

The following graph represents motor rotation in CW direction when DIR input is ON.

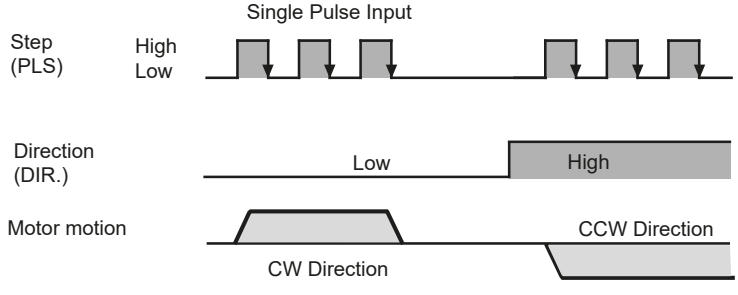

CW/CCW Pulse

When Pulse input into X1, the motor will rotate in one direction.

When Pulse input into X2, the motor will rotate in the opposite direction.

*Motor direction can be configured via SVX ServoSUITE®.

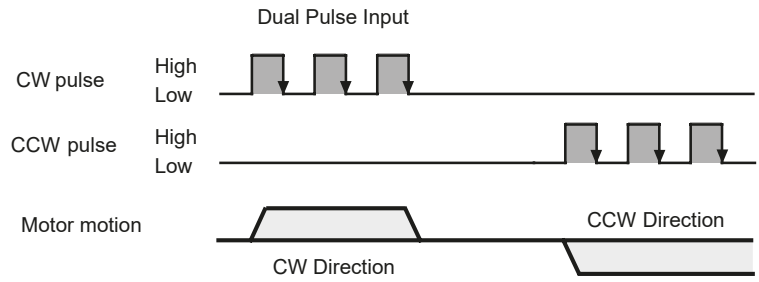

A/B Quadrature

In A/B Quadrature mode, motor rotary direction is based on the the leading signal between A and B.

*Motor direction can be configured via SVX ServoSUITE®. Direction is defined by the leading input between X1/X2.

The following graph represents motor rotation in CW direction when X1 is leading X2.

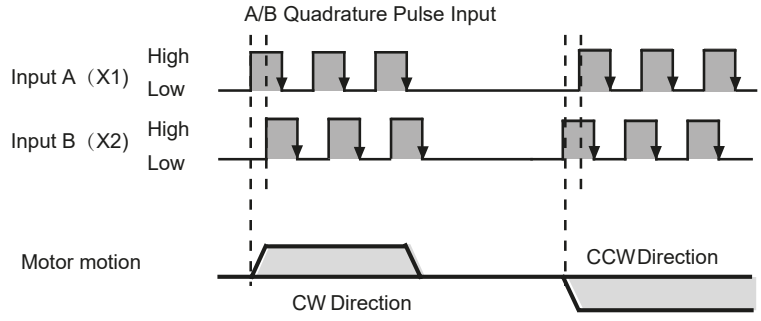

4.8.3.2 Analog Signal Input For Velocity And Torque Mode

SV200 series AC servo drive has 2 single ended analog inputs or 1 differential analog input. The input voltage range is between -10V~+10V. Velocity and torque range can be configured via SVX ServoSUITE® software.

A.Single Ended Analog Input

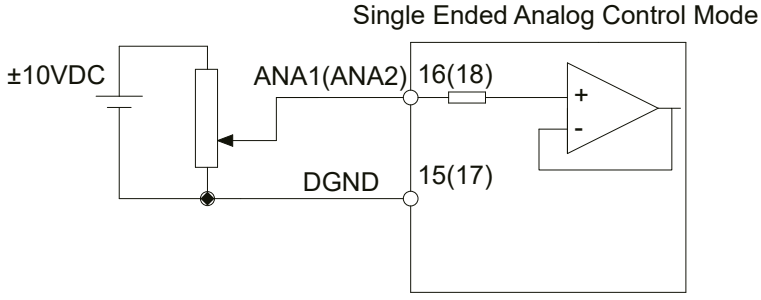

B. Differential Analog Input

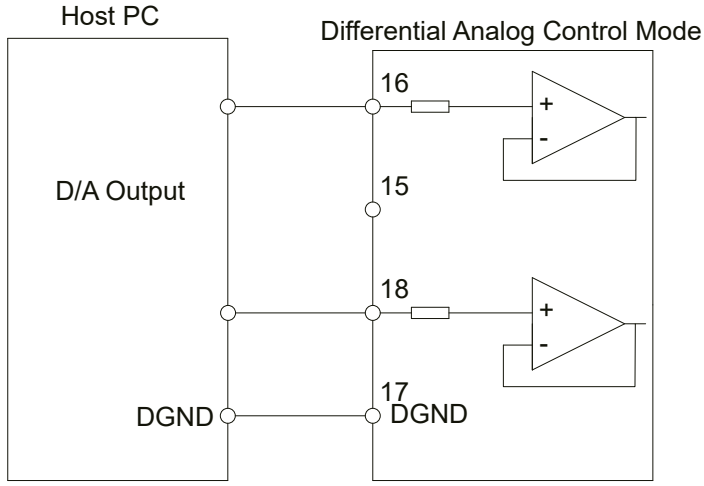

4.8.3.3 High Speed Input Port X1, X2, X3, X4

A. High Speed Input Port

SV200 series AC servo drive has 4 Optically isolated high speed digital inputs X1, X2, X3, X4. These inputs allow input voltage from 5VDC~24VDC with maximum current of 20mA, and up to 500KHz. They can be used for general purpose inputs, connecting sensor switch signals, PLC controllers or other types of controller output signals.

NOTE: When drive is in position mode, X1, X2 can ONLY be set as STEP/DIR signal.

When drive is NOT in position mode, X1, X2 can be set as general purpose signals.

X1, X2, X3, X4 Circuits Are As Follows:

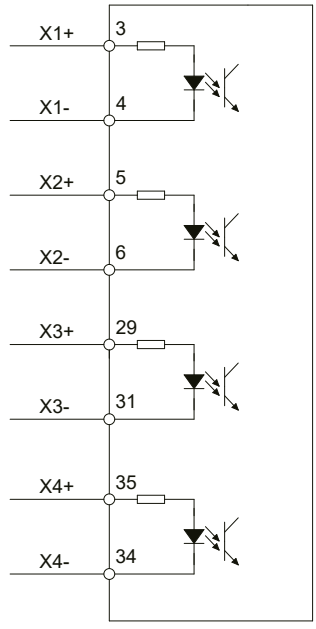

B High Speed Input Connection Diagram

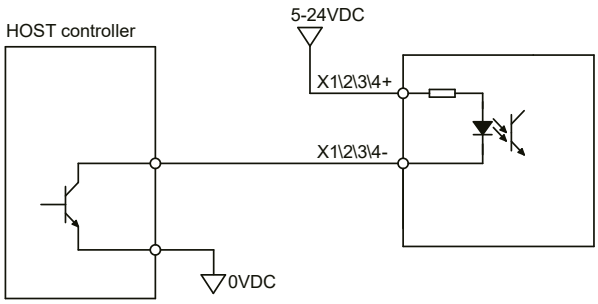

Host Sink Mode

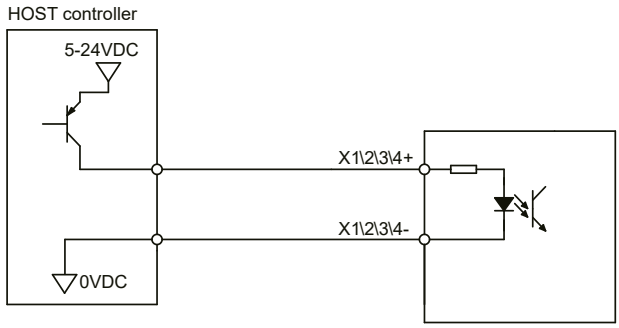

Host Sourcing Mode

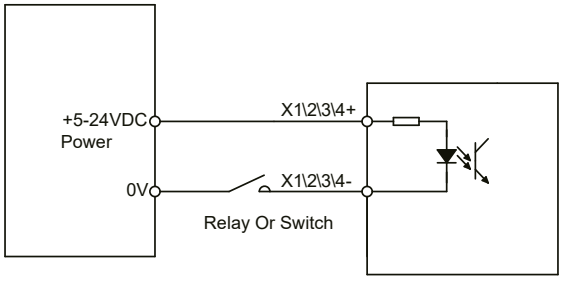

Sensor And Switch Connection

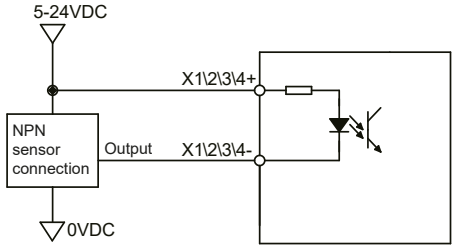

NPN Sensor Connection

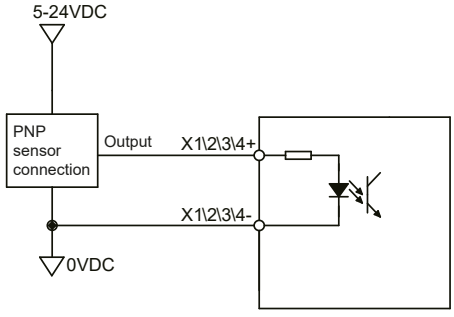

PNP Sensor Connection

4.8.3.4 General Digital Input X5, X6, X7, X8

SV200 series AC servo drives have 4 Optically isolated general digital inputs X5, X6, X7, X8. Input voltage range is 5VDC-24VDC, with maximum input current of 20mA up to 5KHz. Both single-ended and differential signals are allowed.

X5, X6, X7, X8 Circuits Are As Follows:

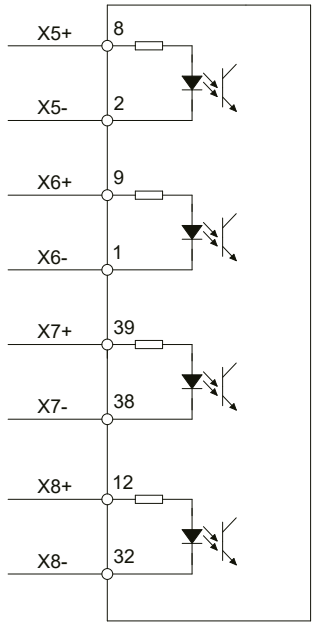

X5, X6, X7, X8 Input Port Connection Diagram

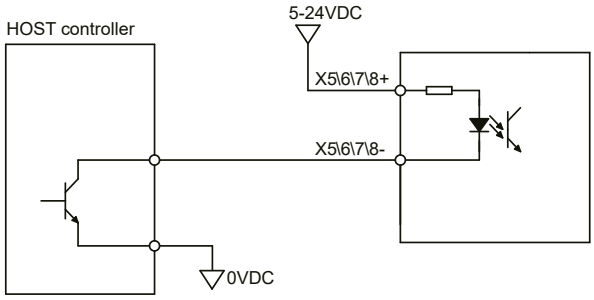

Host Sink Mode

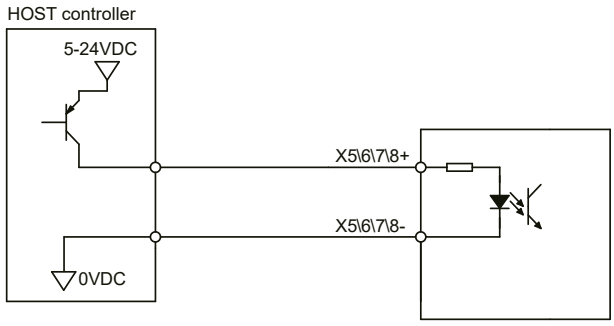

Host Sourcing Mode

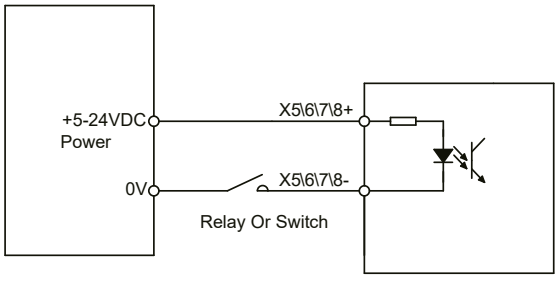

Sensor And Switch Connection

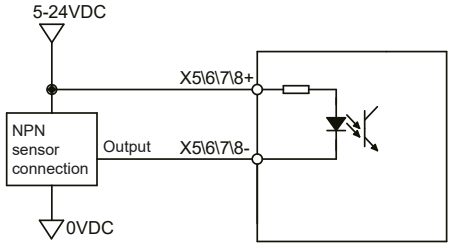

NPN Sensor Connection

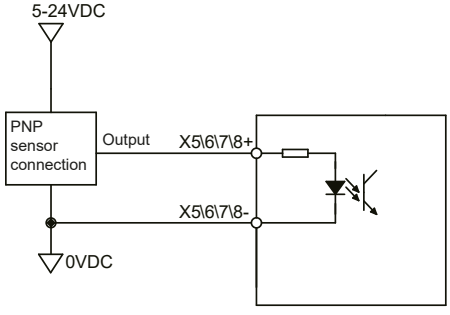

PNP Sensor Connection

4.8.3.5 X9, X10, X11, X12 Input With Common Com Port

SV200 series AC drives also have 4 single ended optically isolated inputs that share a single common node 'COM'. They can be used with sourcing or sinking signals, 5-24V, allowing connections to PLCs, sensors, relays and mechanical switches. Because the input circuits are isolated, they require a source of power. If you are connecting to a PLC, you should be able to get power from the PLC power supply. If you are using relays or mechanical switches, you will need a 5-24 V power supply.

What is COM?

"Common" is an electronics term for an electrical connection to a common voltage. Sometimes "common" means the same thing as "ground", but not always. If you are using sinking (NPN) signals, then COM must connect to power supply +. If you are using sourcing (PNP) input signals, then you will want to connect COM to ground (power supply -).

NOTE: If current is flowing into or out of an input, the logic state of that input is low or closed. If no current is flowing, or the input is not connected, the logic state is high or open.

X9, X10, X11, X12 Circuits Are As Follows:

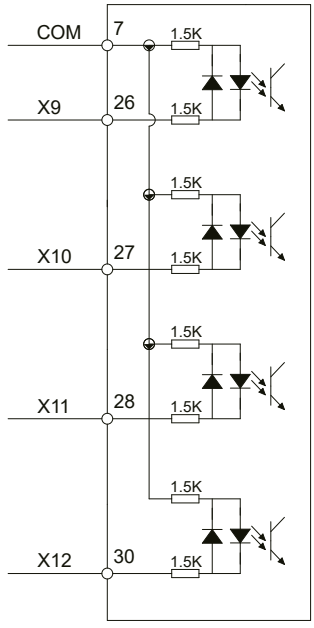

X9, X10, X11, X12 Input Port Connection Diagram

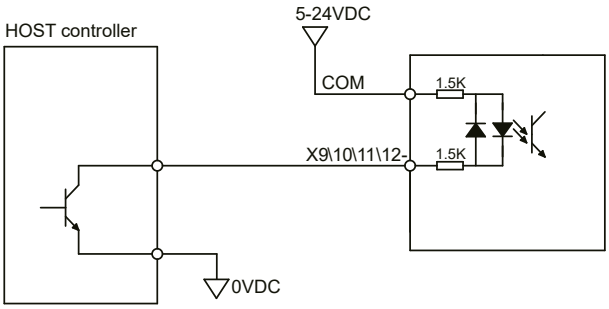

Host Sink Mode

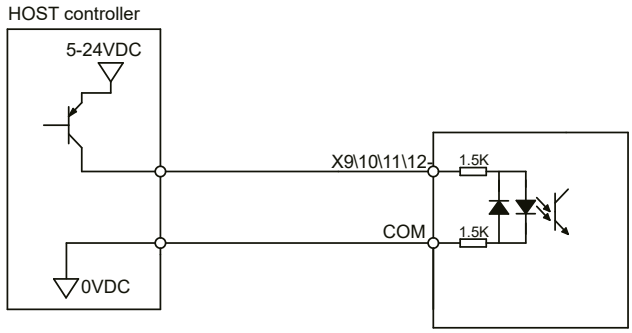

Host Sourcing Mode

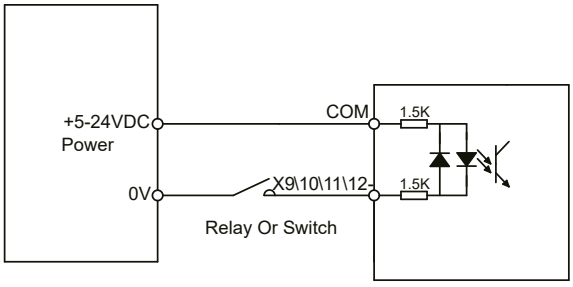

Sensor And Switch Connection

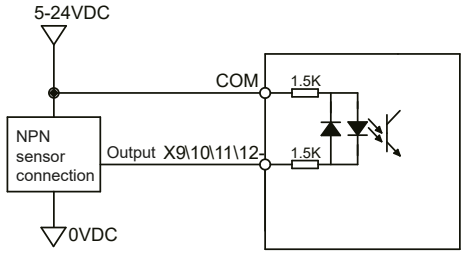

NPN Sensor Connection

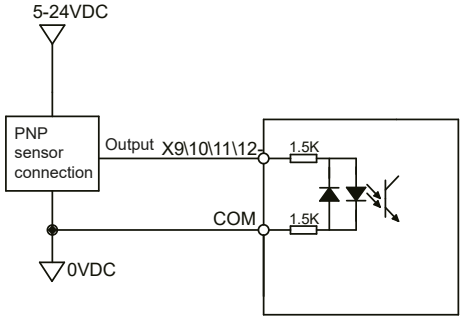

PNP Sensor Connection

4.8.4 CN2 Output Signal Specification

SV200 series AC servo drives feature 6 optically isolated digital outputs. They can be configured via SVX ServoSUITE®. Y1, Y2, Y5, Y6 are differential output signals, they can be used for both sourcing or sinking signals. Y3 and Y4 share a common ground, making them useful for connecting sinking signals.

4.8.5 CN2 Output Signal Diagram

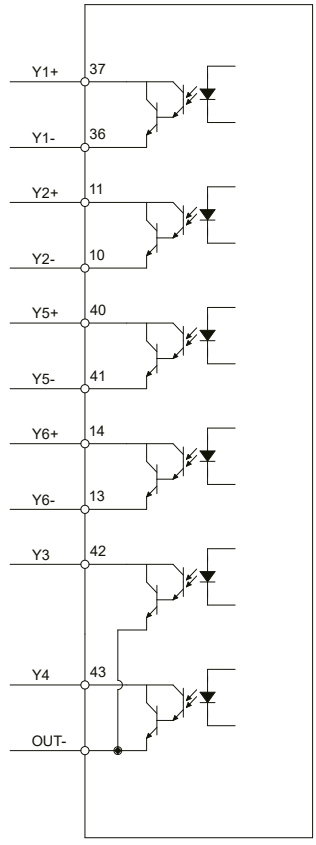

4.8.5.1 Y1, Y2, Y5, Y6 Output Connection Diagram

NOTE: Y1, Y3, Y4, Y5, Y6 maximum outputs are 30VDC 30mA. Y2 maximum output is 30VDC, 100mA.

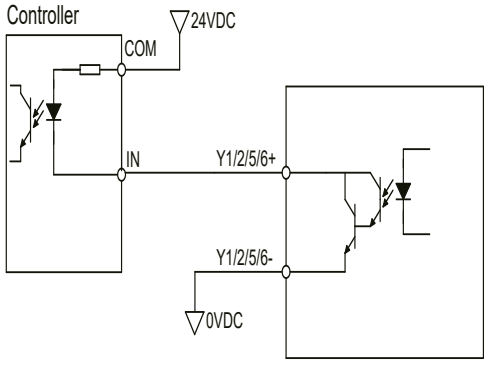

Opt Coupler Circuity

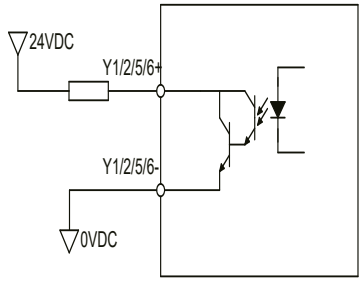

Connect To External Load

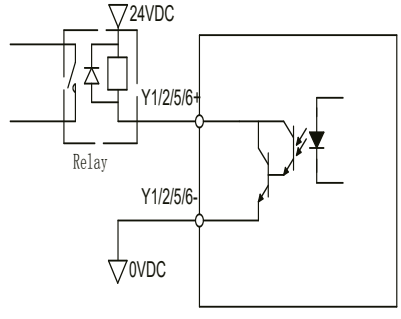

Connect To Relay Circuity

4.8.5.2 Y3, Y4 Connection Examples

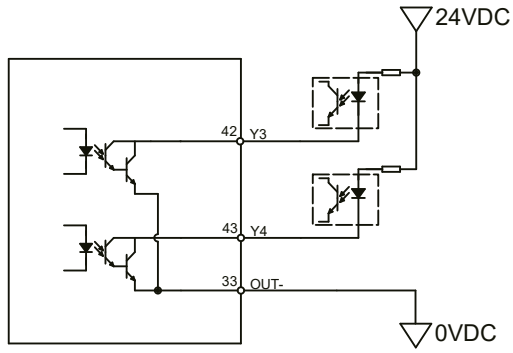

4.8.6 Encoder Feedback Output

SV200 series AC servo drives can output encoder A/B/Z phases as differential output signals through a line driver. The output signal is 5V, A/B signals are 10000 pulse/rev, Z signal is 1 pulse/rev.

The host must use a line receiver to receive the signals. Use twisted pair wires for signal transfer.

4.8.6.1 A/B/Z Connection Diagram

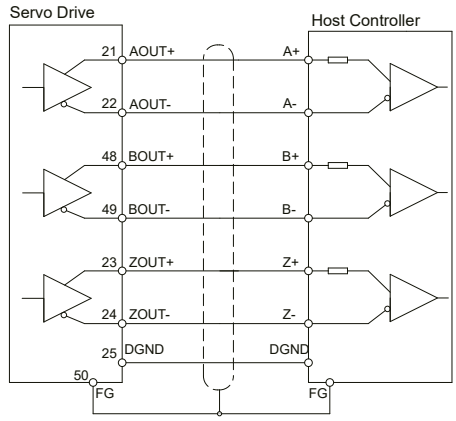

NOTE: Please make sure the host controller and the servo drive are connected to a common ground.

4.8.6.2 Z Phase Open Collector Output

The encoder index pulse signal Z uses open collector output circuitry. Due to the narrow bandwidth of the index pulse, high speed optocoulper circuitry should be used for the host receiver.

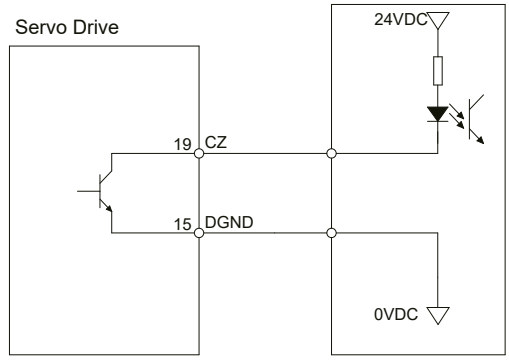

5 Display and Operation

5.1 Description of Control Panel



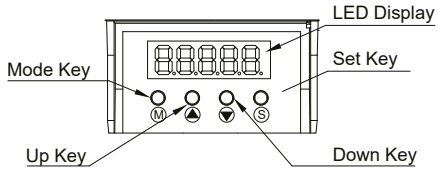

Symbol	Name	Details
	LED Display	The LCD display (5 digits, 7 segments) show the drive's operating condition and warning codes, parameters and setting shows values.
	MODE Key	Press and hold on mode button to switch LED display mode a). Monitoring selection mode b). Function selection mode c). Parameter setting mode When editing the parameters, pressing on mode MODE button can move the cursor to the left, allowing parameters to be changed by using arrow keys.
	UP/DOWN Key	Pressing the UP and DOWN key allow for scrolling through and changing monitor codes, parameter groups and various parameter settings.
	SET Key	Press to set mode Press and hold to save parameters/settings

5.2 Mode Switch Control

1) Pressing  key and  key allow for changing modes as well as status monitoring, function control, parameters setting and etc.

2) If no warnings or faults have occurred, the drive will not go into warning and fault display mode.

3) If any of the following warnings are detected by the drive, the LED display on the drive will switch into warning or fault display mode immediately. Press any key on the drive to switch back to previous display mode.

4) When no key (s) on the control panel is pressed for 20 seconds, the display will switch back to previous status monitoring display mode.

5) In monitoring selection mode, function selection mode and parameter setting mode, when editing the parameters, pressing on  can move the cursor to the left allowing for parameters to be changed by using  keys.

6) In status monitoring mode, pressing and holding the  key, will lock the control panel. To unlock the panel, please press and hold the  key again.

Control mode switch flowchart:

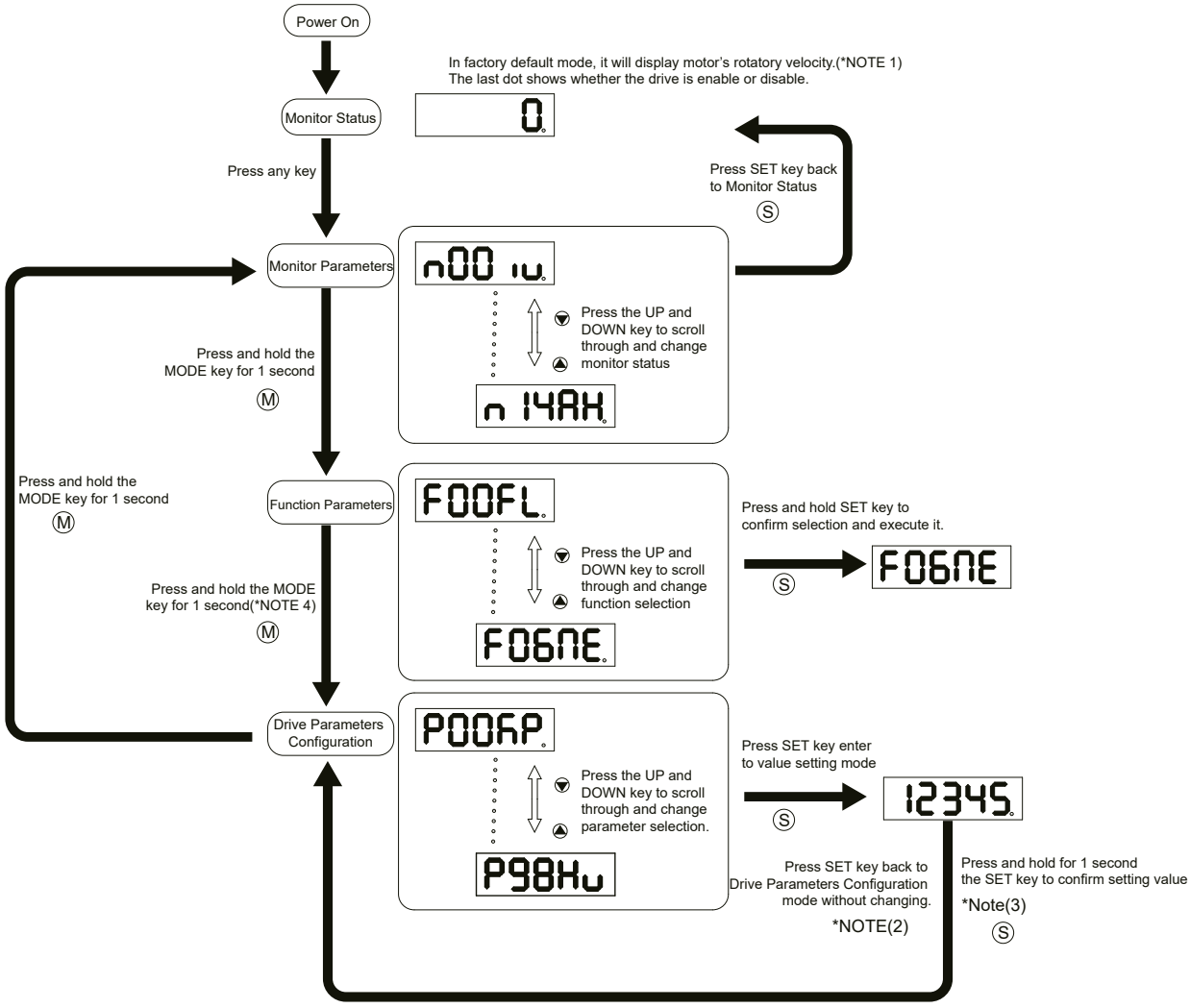

NOTE:

1) When power is applied, drive's display will show customer defined monitoring mode. In factory default mode, it will display motor's rotary velocity in RPM.

2) In parameter setting mode, pressing the S key will quit from parameter setting mode, and return back to parameter selection mode (changes will not be saved).

3) In parameter setting mode, pressing and holding the S button will confirm and apply current parameter setting. This will take effect immediately. However, this change will not save to drive's flash memory. If parameter is required for permanent use, please go to function mode" F04EA", and then press and hold S button to save the parameter change.

4) When drive is connected to the host computer with SVX ServoSUITE® on, parameter setting mode CANNOT be accessed directly on drive's control panel.

5.3 LED display description

5.3.1 Decimal Point And Negative Sign Description

LED display	Description
	Negative sign: when display value ≥-9999, the highest digit will show as '-'. i.e.  , as '-9999' When display value≤-10000, the negative sign will not be shown,  , as "-10000"

5.3.2 Parameter View Setting

LED display	Description
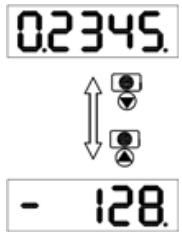	There are only 5 digits on the LED display, when more than 5 digits are needed, it will show as following: When the highest digit is flashing, it means the lower 5 digits are showing. Press  to show the upper 5 digits. The graphic is showing '-12802345'

5.3.3 Parameter Save Setting

LED display	Description
	In parameter setting mode, pressing and holding the  key will save the parameter change. 'Saved' will also be shown on the LED display.
	In parameter setting mode when the motor is rotating, pressing and holding the  , will cause the LED display to show status as busy, meaning that the current parameter cannot be saved, stop the current motor motion and save the parameter again.

5.3.4 Point To Point Motion Mode

LED display	Description
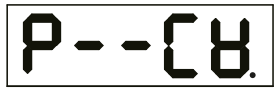	P-CW means motor is rotating in CW direction under point-to-point mode
	P-CCW means motor is rotating in CCW direction under point-to-point mode

5.3.5 Jog Mode

LED display	Description
J--CW	J—CW means motor rotating in CW direction under JOG mode
J-CCW	J—CCW means motor rotating in CCW direction under JOG mode

5.3.6 Control Panel Lock

LED display	Description
LCK	This means the key panel is locked. Press and hold S for 1 second under status monitoring mode to lock.
unLCK	When control is locked. Press and hold S for 1 second to unlock the key panel.

5.4 Status Monitoring Selection Mode

To change the status monitoring type, please press M to enter monitoring selection mode, and then use ▲ ▼ to make selections, and press S to confirm. Steps are shown as follows:

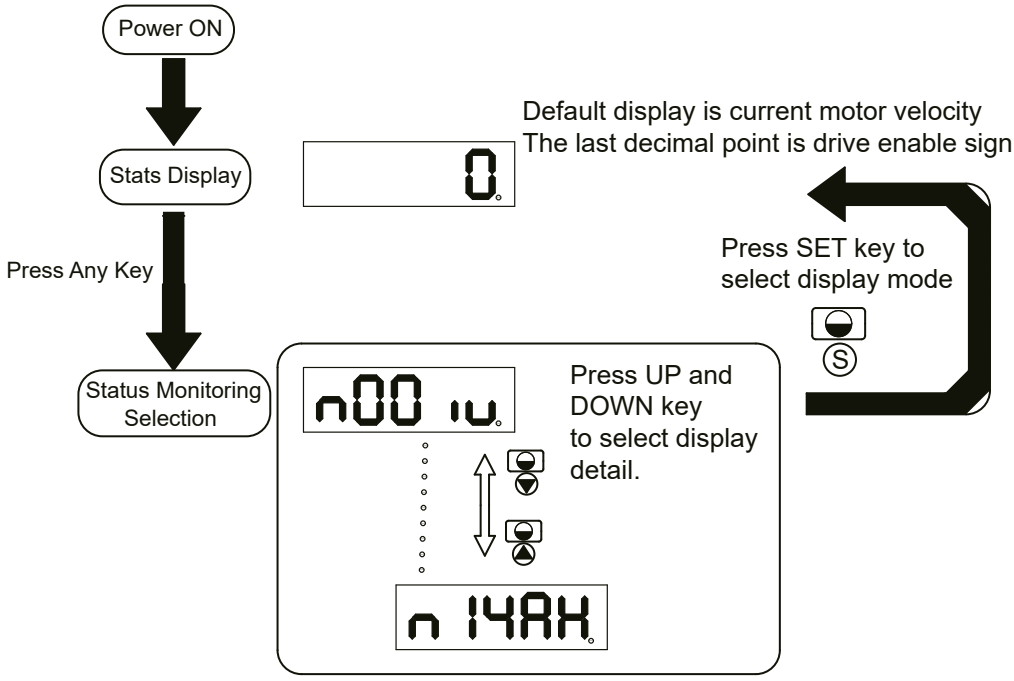

N mode selection and setting	LED display	Description	Unit
n-00		Motor Rotating Speed	RPM
n-01		Position Error	counts
n-02		Pulse Counter	Pulse
n-03		Encoder Counter	counts
n-04	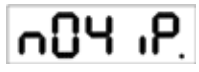	Command Position Counter	counts
n-05	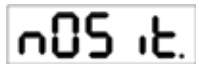	Drive Temperature	x 0.1°C
n-06	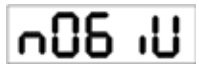	DC Bus Voltage	x0.1V
n-07	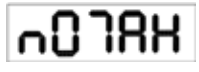	Fault History 1	
n-08		Fault History 2	
n-09	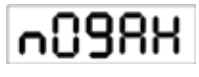	Fault History 3	
n-10		Fault History 4	
n-11		Fault History 5	
n-12	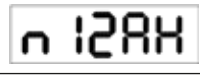	Fault History 6	
n-13	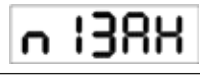	Fault History 7	
n-14	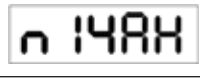	Fault History 8	
n-15		Fault History 8	
n-16		Differential Analog Input	0.001VDC
n-17	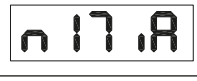	Analog Input 1	0.001VDC
n-18		Analog Input 2	0.001VDC

5.5 Function Mode Control

In function mode (display F+ parameter number), you can select functions for preoperational mode, restart the drive, enable or disable the drive and so on. In status monitoring mode, pressing and holding (M) for 1 second will enter function control mode. Press (▲) (▼) to select function, and then press and hold (S) to confirm or execute the function. (NOTE: F-00(FL) and F-01(CJ) excepted)

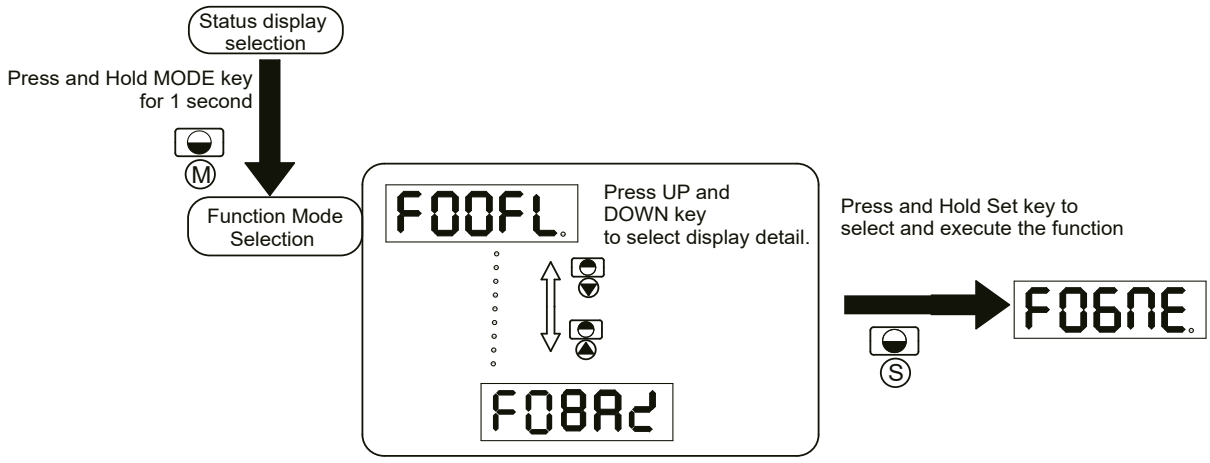

5.5.1 Function Mode Description

Function mode details are as follows:

Function mode number	LED display	Description
F-00	F00FL	point to point position mode:1) rotating speed: 1rps 2)travel distance: 1rev
F-01	F01CJ	JOG mode:JOG speed 1rps
F-02	F02rE	Restart the drive
F-03	F03Ar	(F-03AR) Clear drive's current alarm
F-04	F04SA	(F-04SA) Save parameter changes for P-00 to P-98
F-05	F05Md	(F-05MD) Drive disable
F-06	F06nE	(F-06ME) Drive enable
F-07	F07MC	(F-07MC) Select motor specification
F-08	F08Ad	(F-08AZ)Analog input auto-offset
F-09	F08Ad	(F-09SK) Stop motion

5.5.2 Operation Flow Chart :

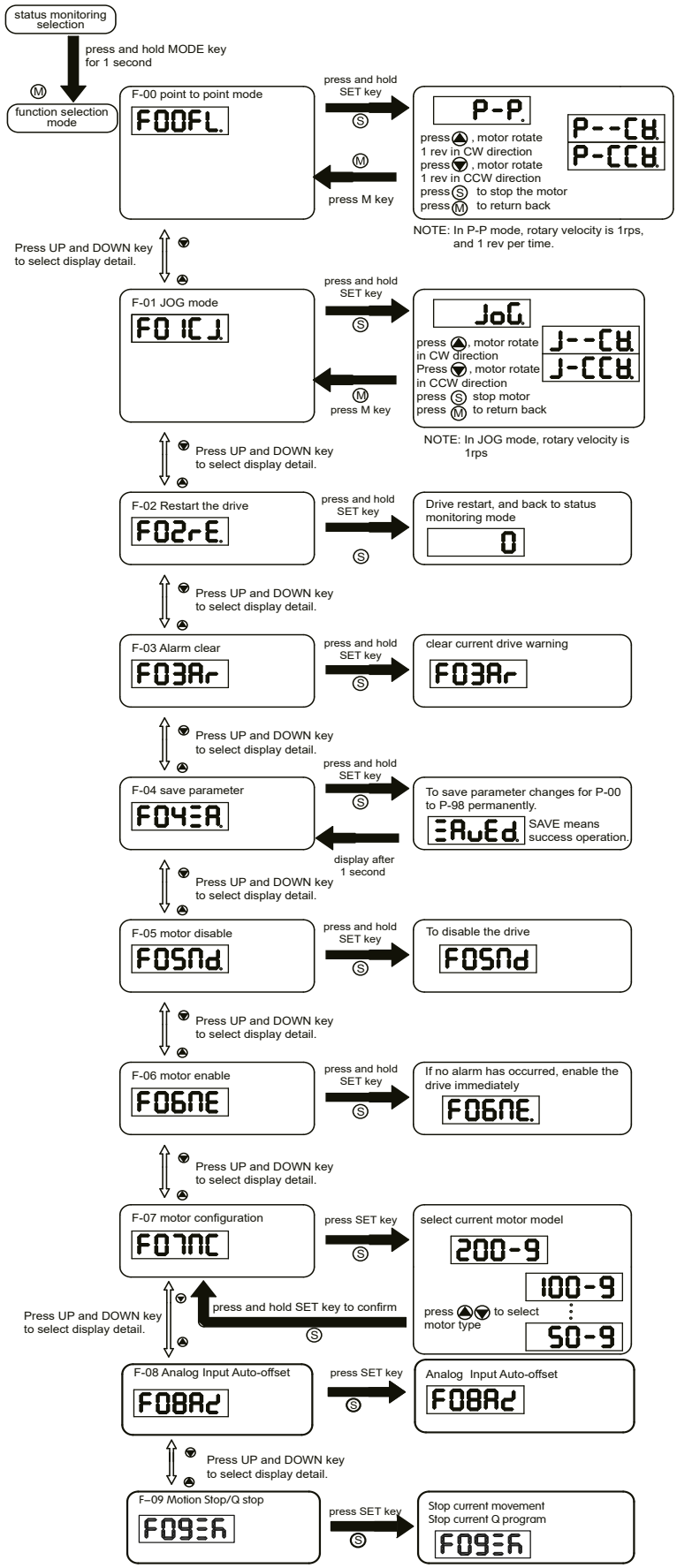

5.6 Parameter Setting Mode

5.6.1 Parameter Setting Description

The parameter setting mode (P+parameter number) allows you to select, display and edit the required parameter. In function control mode, press and hold M for 1 second to enter parameter setting mode. Use ▲ ▼ to select required parameter, and press S to view or edit the parameter. Press S again to quit and no change will be saved. Press and hold S for 1 second to save the parameter change. However this change will NOT be saved at next power on.

If you want to save parameter PERMANENTLY, please go into function control mode (F+parameter number), and use F-04SA function.

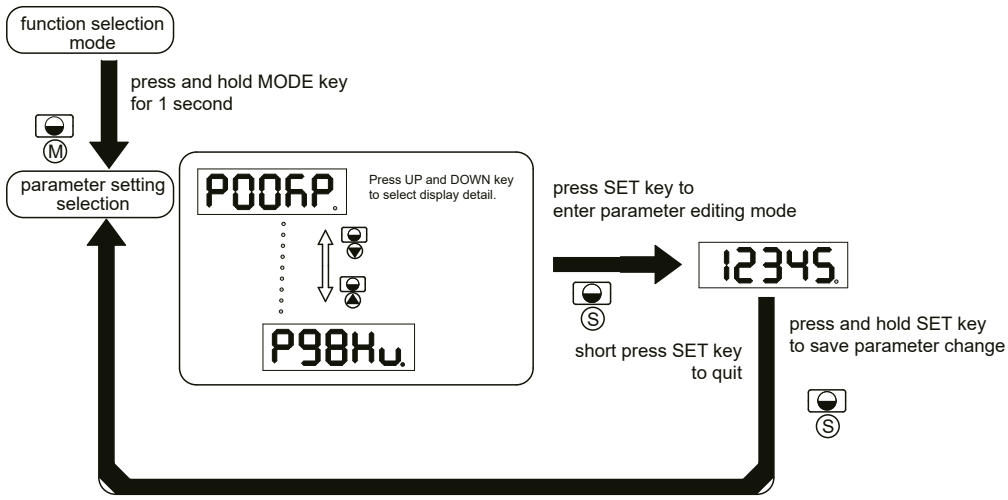

5.6.2 Parameter Editing Examples

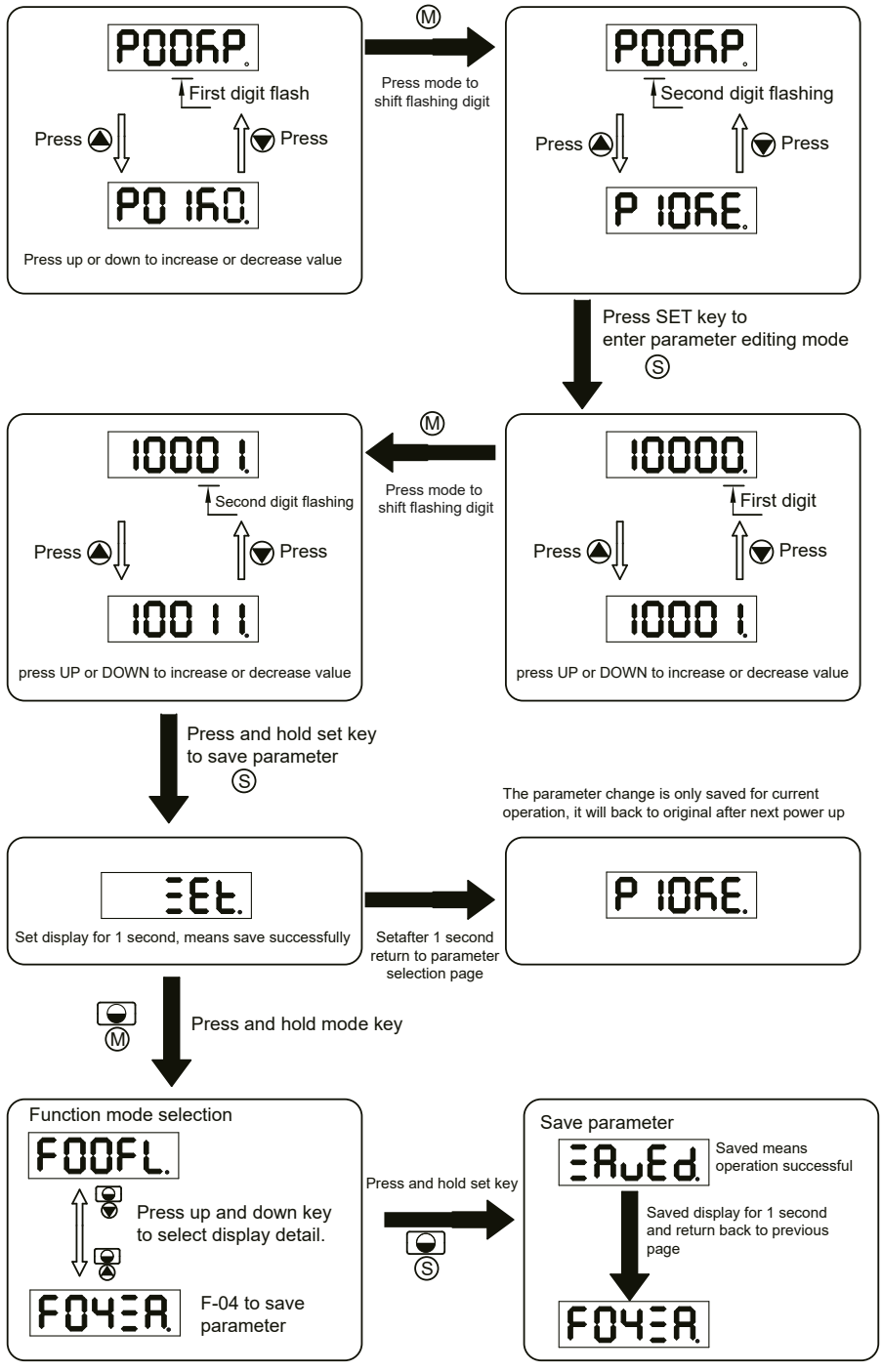

5.7 Control Panel Lock

In order to prevent making mistakes on the key panel, a key panel lock is featured on all SV200 AC servo drives. When lock function is on, no function can be changed directly on drive's control panel.

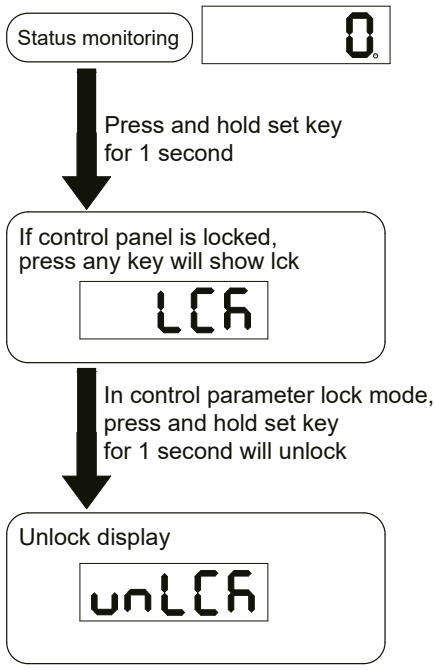

5.8 Warning And Fault Display

When power is applied, if any of the following warnings are detected by the drive, the LED display on the drive will switch into warning or fault display mode immediately.

If more than one warning is detected, you can scroll through by pressing buttons. Press or button to clear the warning display and return to the previous display mode.

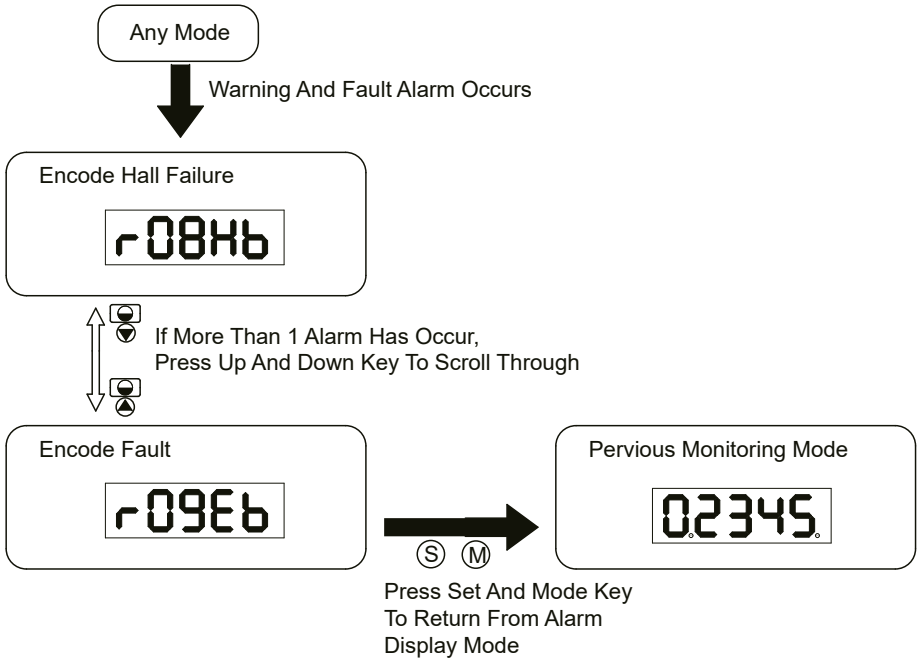

LED display	Description	LED display	Description
r01ot	Drive over temperature	r14cL	CW limit is activated
r02ur	Internal voltage fault	r15cL	CCW limit is activated
r03uH	Over voltage	r16CL	Current limit
r04HC	Over current	r17CE	Communication error
r05LC		r18EF	Parameter save failed
r06rC		r19LP	Phase loss of the main circuit
r08Hb	Bad hall sensor	r20to	STO is activated
r09Eb	Encoder error	r21rF	Regeneration failed
r10PL	Position error	r22uV	Low voltage
r11Lu	Low voltage	r239E	Q program is empty
r12ou	Velocity limited	r24dd	Motion Command Received While Motor Disabled
r13Lt	CW limit or CCW limit activated		

6 Preoperational mode

When using preoperational mode, disconnect servo motor shaft from mechanical system to avoid accidental damage. Perform this operation under no-load condition.

6.1 Inspection Before Trial Run

In order to avoid accidental damage to servo drive and mechanical systems, we strongly recommend following safety checks before you turn on the drive.

1) Connection inspections

Ensure secure wiring for power connector P1, motor connector P2, Encoder connector CN3, communication connector CN1. Check wiring connections and insulation on each connector to prevent short circuit potential.

Ensure ground wire from power connector P1, and motor connector P2 are securely connected (screwed) to the shield ground.

2) Power supply inspection

For 3-phase wiring, check and ensure voltage supplies between L1/L2/L3, meets drive's power supply specifications.

For control circuit wiring, check and ensure voltage between L1C/L2C is within the correct supply voltage range.

For single-phase wiring, check and ensure voltage between L1 and L3 is within the correct supply voltage range.

3) Ensure secure installation of servo drive and motor.

4) Ensure no load is installed on the servo motor.

6.2 Trial Run Procedure

Step	Details	Description
1	Please securely install the motor. 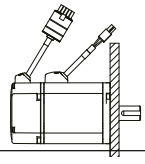	1) The motor can be installed on the machine. 2) Ensure no load is installed on the servo motor shaft.
2	Please ensure the wiring between the drive and motor is correct.	1.Terminal U,V,W and FG must be connected to Red, Yellow ,Blue and Yellow/Green cable separately (U:Red,V:Yellow,U:Blue,FG:Yellow/Green).If not connected to the specified cable and terminals, then the drive cannot control motor. 2.Ensure proper connection of encoder cable to CN2 connector.
3	Please make sure the main power circuit wiring is connected correctly.	Refer to Section 3.1 Connecting to Peripheral Devices to confirm the main power circuit wiring is correct.
4	Power ON.	Do not apply 380VAC power supply into the servo system.
5	The LED Display will show as follows without alarm:  When the alarm occurs, it will display: 	1. When the power is on ,the normal display should be shown without any alarm codes and the drive is disabled. 2. If display shows alarm codes such as r-08 and r-09.This means that the encoder feedback connection is incorrect. Check the encoder wiring. 3. Please refer to the other alarm trouble shooting10.
6	User needs to set up a motor brake control circuit when using a electromagnetic brake motor.	Please refer to Section 3.4 Electromagnetic Brake for more details.
7	Motor Configuration	Configure the correct motor that is being used with the SVX ServoSUITE® or the operation panel. Please refer to Motor Configuration 6.3
8	JOG Trial Run without Load	Ready to run JOG Trial if all steps above are done.

6.3 Manual Motor Configuration

Before JOG mode operation, motor configuration is required. For more details on the motor specifications, please refer to Motor Installation chapter..

6.3.1 Use Drive Control Panel To Setup

Motor information and LED display list:

LED display	Motor Model Number
50-F	N/A
100-F	J0100-302-3-000
200-F	J0200-302-4-000
400-F	J0400-302-4-000
250-F	N/A
500-F	N/A
750-F	J0750-302-5-000

For more AMP motor information, please refer to Motor Installation chapter.
For example: To set up a drive for model J0200-302-4-000 motor:

Step	LED display	Description
1	F00FL	Press (M) to get into the Function Parameters mode at the Monitor Status mode
2	F07nC	Press the ▲ or ▼ key to select F07 (MC)
3	200-F	Press (S) key to get into Value Setting mode.
4	100-F	Press ▲ or ▼ key to change value.
5	SAvEd	Press and hold (S) key for 1 second to confirm motor configuration.
6	F07nC	Parameter is effective only after the servo drive is restarted.

6.3.2 Using Software To Configure Motor

User can also use SVX ServoSUITE® to select the proper motor configuration.

Step 1: Launch SVX ServoSUITE® on PC, and select the corresponding communication port.

Step 2: After successful connection, use the drive configuration page to set up.

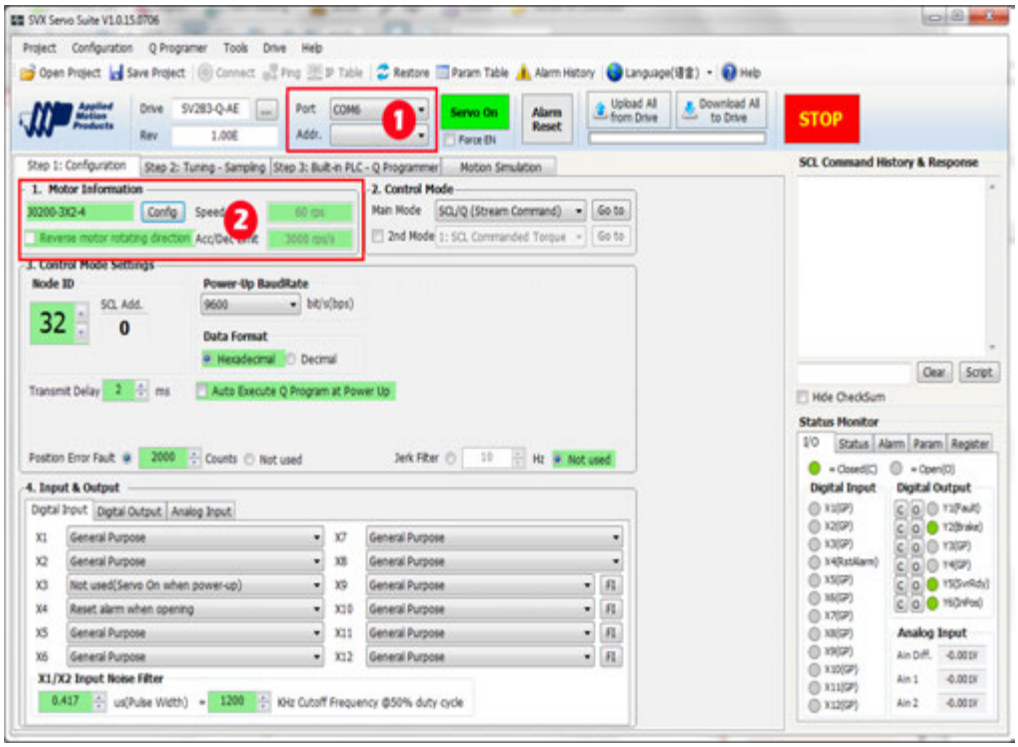

Step 3: click on motor “Config” button and select motor model from drop-down list.

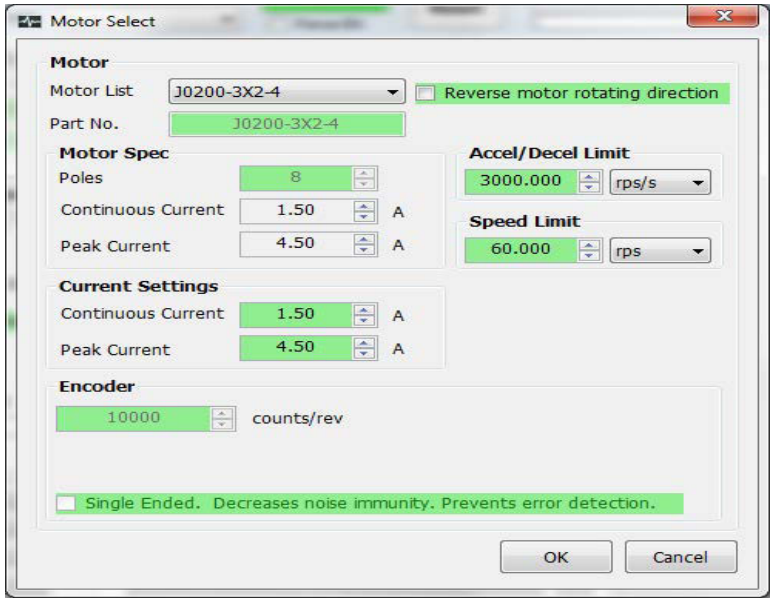

Step 4: Click “download to drive” to save the setting to the drive.

6.4 Using JOG Mode

Step	LED display	Description
1	P00RP	Press M to switch from Monitor Status mode into Drive Parameters Configuration mode
2	P62Ξ 1	Scroll ▲ or ▼ key to select parameter P62 (SI)
3	2	Press S key to get into Value Setting mode
4	3	Scroll ▲ or ▼ key to change values.
5	ΞEt	Press and hold S key for 1 second to confirm the setting value.
6	F00FL	Press M key to get into the Function Operation mode.
7	F06nE	Scroll ▲ or ▼ key to select Function F06 (MC) to enable the motor.
8	F06nE.	Press and hold SET key for 1 second, the drive will be enabled. The last dot will light to shows the drive is enabled.
9	F0 1C J.	Scroll the ▲ or ▼ key to get into function F01 (CJ) to run JOG mode.
10	JoG.	Press the S key to get into JOG mode
11	J--CH.	Press the ▲ key ,the motor will rotate at CW direction with the speed 1rps.
12	J-CCH.	Press the ▼ key ,the motor will rotate at CCW direction with the speed 1rps.
13	JoG.	Press the S key to stop the motor
14	F0 1C J.	Press the M key to get back to the Function Operation mode.

6.5 Configuration by Personal Computer

In order to ensure that the servo drive and motor meet your operation requirements, we strongly recommend using SVX ServoSUITE® to complete these configuration steps:

1. Servo Motor model selection and configuration
2. Operational mode selection
3. Define drive's input/output mode
4. Apply auto tuning function on PID parameters for optimized motor performance.

For details on SVX ServoSUITE®, refer to the software manual.

Connect to Personal Computer

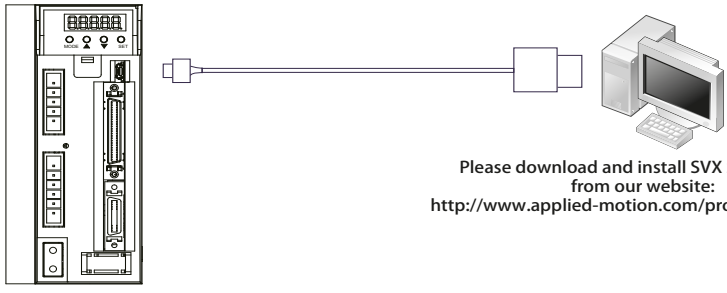

Please download and install SVX ServoSUITE®
from our website:
http://www.applied-motion.com/products/software

SVX ServoSUITE® interface

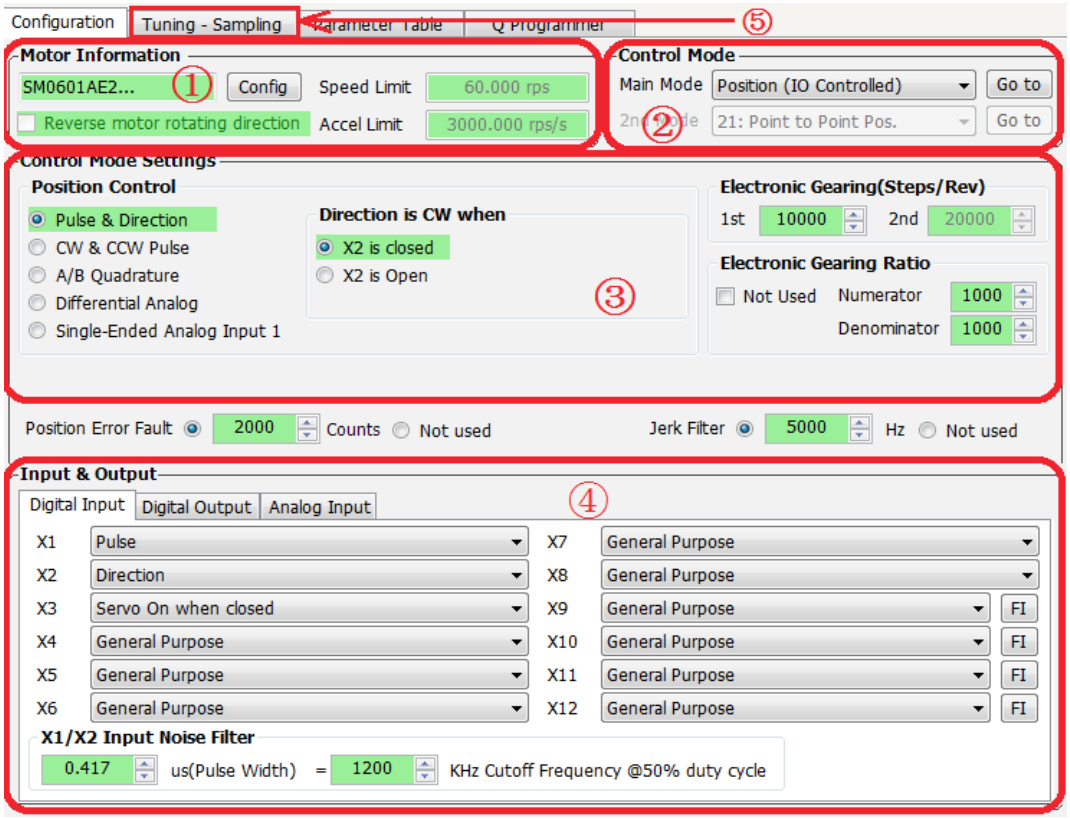

Configuration Steps	Details
Step 1	Motor Configuration
Step 2	Select Control Mode
Step 3	Further configuration
Step 4	I/O configuration
Step 5	Tuning

7 Operation Mode Selection

7.1 General Function Setting

7.1.1 Drive Servo On settings

To control servo motor enable/disable switch

1) Servo ON signal (input X3)

By default, the Servo ON input (X3) is not configured. However, this X3 digital input may be configured in the following way to add a level of system safety:

Signal Name	PIN (CN2)	Condition	Function
X3	29 (X3+)	Closed	Servo motor enable Servo ON
	31 (X3-)	Open	Servo motor disable Servo OFF

2) Definition for Servo On signal

Customers can Change parameters P-62 (SI) and P-14 (PM) to setup

A. When P-14 (PM) = 2, parameter settings are as follows:

P-14 (PM)	P-62 (SI)	Condition	Function
P-14 (PM) = 2 (default)	1	Closed	If P-14(PM)=2 and P-62(SI)=2, driver will enable when power-up,and then switch to disable.
		Open	Servo Enable
	2 (default)	Closed	Servo motor enable Servo ON
		Open	Servo motor disable Servo OFF
	3		Enable servo motor when power ON

B. When P-14 (PM) = 5, the parameter settings are as follows:

P-14 (PM)	P-62 (SI)	Condition	Function
P-14 (PM) = 5	1	Closed	Servo motor disable Servo OFF
		Open	Servo motor enable Servo ON
	2 (default)	Closed	Servo motor enable Servo ON
		Open	Servo motor disable Servo OFF
	3		Servo motor disable when power ON

NOTE: if P-14(PM)=5, regardless of P-62 (SI) settings, the drive will be disabled (Servo OFF) at power up. Please use input X3 to enable based on P-62(SI) setting.

3) Software Configuration

On the drive configuration page-----input & output select X3 function to setup.

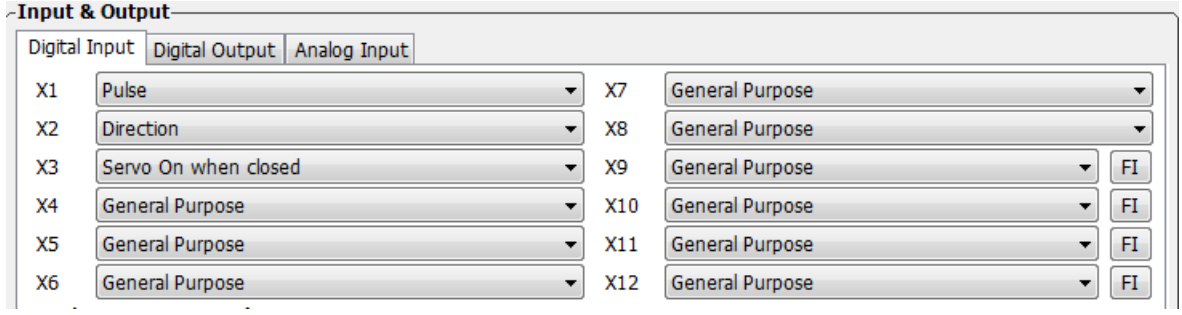

7.1.2 Alarm Reset

The Alarm Reset Input can be used to clear warnings and faults, it can be set via P-63 (AI)

<table>
<tr><th>Signal Name</th><th>PIN (CN2)</th><th>P-63 (AI)</th><th colspan="2">Function</th></tr>
<tr><td rowspan="5">X4</td><td rowspan="5">35 (X4+)
34 (X4-)</td><td rowspan="3">1</td><td colspan="2">During normal operation, input X4 must be kept Open (HIGH). Clearing the alarm status will ONLY occur when X4 transitions from High to Low. When X4 changes from Open (HIGH) to Closed (LOW), the warning or fault alarms will be cleared.</td></tr>
<tr><td> 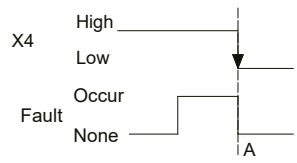
</td><td> 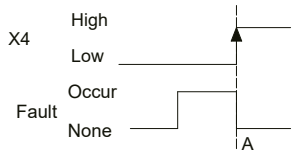
</td></tr>
<tr><td>1) X4 at HIGH, alarm NOT cleared
2) At point A, X4 changes from HIGH to LOW, alarm is cleared</td><td>1) X4 is low, alarm NOT cleared
2) At point A, X4 changes from LOW to HIGH, alarm NOT cleared
3) At point B, X4 changes from HIGH to LOW, alarm cleared</td></tr>
<tr><td rowspan="3">2</td><td colspan="2">During normal operation, input X4 must be kept CLOSED (LOW). Clearing the alarm status will ONLY occur when X4 transitions from Low to High. When X4 changes from CLOSE (LOW) to OPEN (HIGH), the warning or fault alarms will be cleared.</td></tr>
<tr><td> 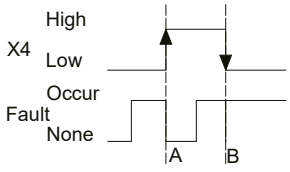
</td><td> 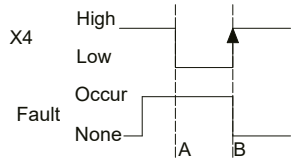
</td></tr>
<tr><td>1) X4 at LOW, alarm NOT cleared
2) At point A, X4 changes from LOW to HIGH, alarm cleared
3) At point B, X4 transitions from high to low, the alarm does not clear</td><td>1) X4 is HIGH, alarm NOT cleared
2) At point A, X4 changes from HIGH to LOW, alarm NOT cleared
3) At point B, X4 changes from LOW to HIGH, alarm cleared</td></tr>
<tr><td>3
(default)</td><td colspan="2">General purpose input</td></tr>
</table>

Software Configuration

On the drive configuration page ----- Input & Output select X4 functions to setup.

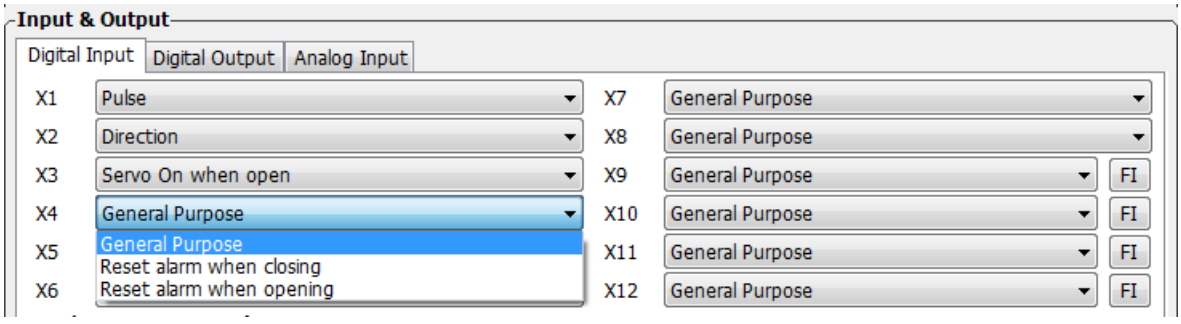

7.1.3 CW/CCW limit

In order to prevent damage that might be caused by mechanical hardware accidentally moving out of range, it is highly recommended that the CW/CCW position limits be configured by using external end-of-travel sensors connected to inputs X5 and X6.

P-64 (DL)	Description	Condition	Signal Name	Function
1,4	X5 sets CW limit X6 sets CCW limit Stops motion when X5/X6 is closed	Closed	X5	Stops motion in CW direction, CW limit warning ON
			X6	Stops motion in CCW direction, CCW limit warning ON
		Open	X5	Rotates in CW direction as normal
			X6	Rotates in CCW direction as normal
2,5	X5 sets CW limit X6 sets CCW limit Stops motion when X5/X6 is open	Closed	X5	Rotates in CW direction as normal
			X6	Rotates in CCW direction as normal
		Open	X5	Stops motion in CW direction, CW limit warning ON
			X6	Stops motion in CCW direction, CCW limit warning ON
3,6,13,16	X5, X6 as general purpose input (default)			
7	X5 sets CW limit Stops motion when X5 is closed X6 as general purpose input	Closed	X5	Stops motion in CW direction, CW limit warning ON
		Open	X5	Rotates in CW direction as normal
8	X5 sets CW limit Stops motion when X5 is open X6 as general purpose input	Closed	X5	Rotates in CW direction as normal
		Open	X5	Stops motion in CW direction, CW limit warning ON
9	X6 sets CCW limit Stops motion when X6 is closed X5 as general purpose input	Closed	X6	Stops motion in CCW direction, CCW limit warning ON
		Open	X6	Rotates in CCW direction as normal
10	X6 sets CCW limit Stops motion when X6 is closed X5 as general purpose input	Closed	X6	Rotates in CCW direction as normal
		Open	X6	Stops motion in CCW direction, CCW limit warning ON
11,13	X6 sets CW limit X5 sets CCW limit Stops motion when X5 is closed	Closed	X6	Stops motion in CCW direction, CCW limit warning ON
			X5	Stops motion in CCW direction, CCW limit warning ON
		Open	X6	Rotates in CW direction as normal
			X5	Rotates in CCW direction as normal
12,16	X6 sets CW limit X5 sets CCW limit Stops motion when X5 is open	Closed	X6	Rotates in CW direction as normal
			X5	Rotates in CCW direction as normal
		Open	X6	Stops motion in CW direction, CW limit warning ON
			X5	Stops motion in CCW direction, CCW limit warning ON
17	X6 sets CW limit Stops motion when X6 is closed X5 as general purpose input	Closed	X6	Stops motion in CW direction, CW limit warning ON
		Open	X6	Rotates in CW direction as normal
18	X6 sets CW limit Stops motion when X6 is open X5 as general purpose input	Closed	X6	Rotates in CW direction as normal
		Open	X6	Stops motion in CW direction, CW limit warning ON
19	X5 sets CW limit Stops motion when X5 is closed X6 as general purpose input	Closed	X5	Stops motion in CCW direction, CCW limit warning ON
		Open	X5	Rotates in CCW direction as normal
20	X5 sets CCW limit Stops motion when X5 is open X6 as general purpose input	Open	X5	Rotates in CCW direction as normal
		Open	X5	Stops motion in CCW direction, CCW limit warning ON

Software Configuration

In drive configuration page-----Input & Output X5/X6 to select corresponding functions

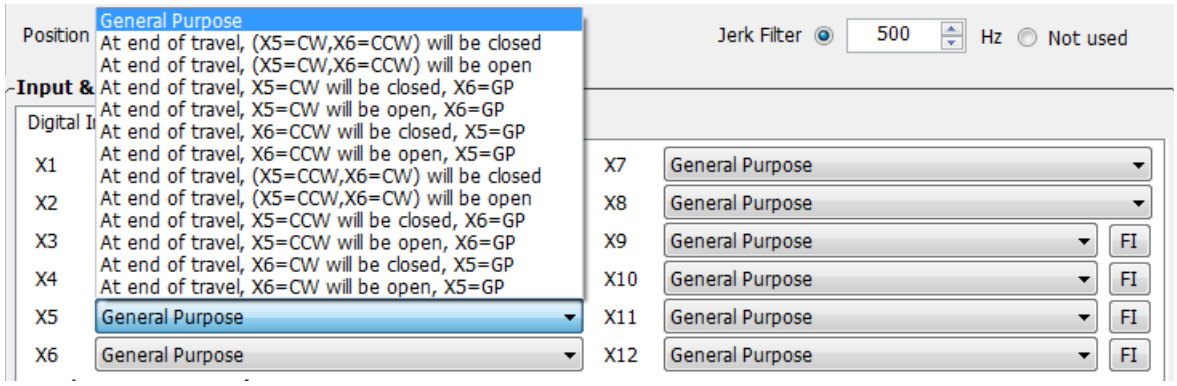

7.1.4 Global Gain Switch Function

Use input X7 for the Global Gain selection. This gain selection function is used to dynamically configure the servo drive to run the motor with the least time delay and close as possible to the host command. When load characteristics change significantly, change of this gain value will reduce the motor's settling time and motor vibration. It can be used to optimize the motor's overall performance. The two global gain parameters are: P-00 (KP), and P-01 (KG).

In factory default mode, this function is disabled. It can be set via SVX ServoSUITE® or P-65 (MI) first digit (from right to left) in parameter setting mode directly from the drive.

Signal Name	PIN	P-65 (MI)	Condition	Function
X7	X7+ (39) X7- (38)	1	Closed	Use global gain 1------P-00 (KP)
			Open	Use global gain 2------P-01 (KG)
		2	Closed	Use global gain 2------P-01 (KG)
			Open	Use global gain 1------P-01 (KP)
		3 (default)		Always use global gain 1----P-00(KP)

Software Configuration

In drive configuration page-------Input/Output select X7 input to setup.

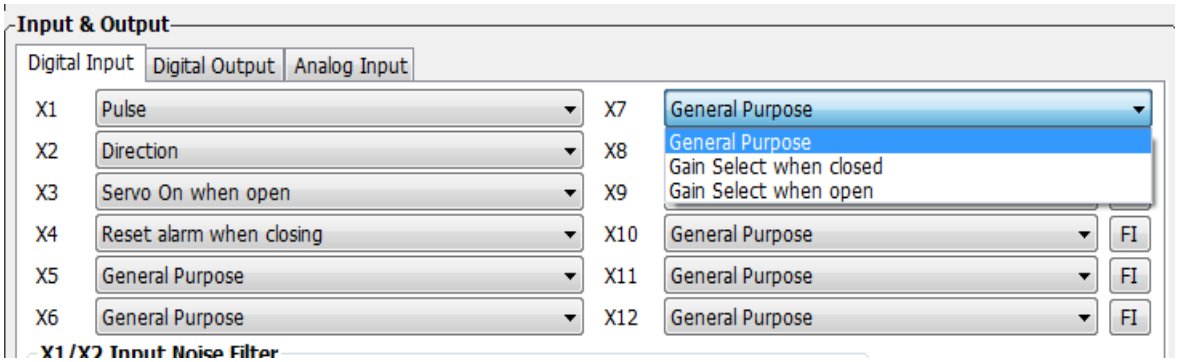

7.1.5 Control Mode Switch

SV200 series AC servo drives allow the choice of 2 types of control modes to be selected by using external input X8. The control modes can be configured via two parameters P-12 (CM) and P-13 (CN).

In factory default mode, the control mode switch function is disabled. It can be configured via SVX ServoSUITE® or P-65 (MI) third digit (from right to left) in parameter setting mode on the drive's control panel.

Signal Name	PIN	P-65 (MI)	Condition	Function
X8	X8+ (12) X8- (32)	□1□□	Closed	Use Control mode 1-------P-12 (CM)
			Open	Use Control mode 2-------P-13 (CN)
		□2□□	Closed	Use Control mode 2-------P-13 (CN)
			Open	Use Control mode 1-------P-12 (CM)
		□3□□ (Default)		Always use control mode 1---P-12(CM)

Software Configuration

In drive configuration page-------Input & Output; select X8 function to set up.

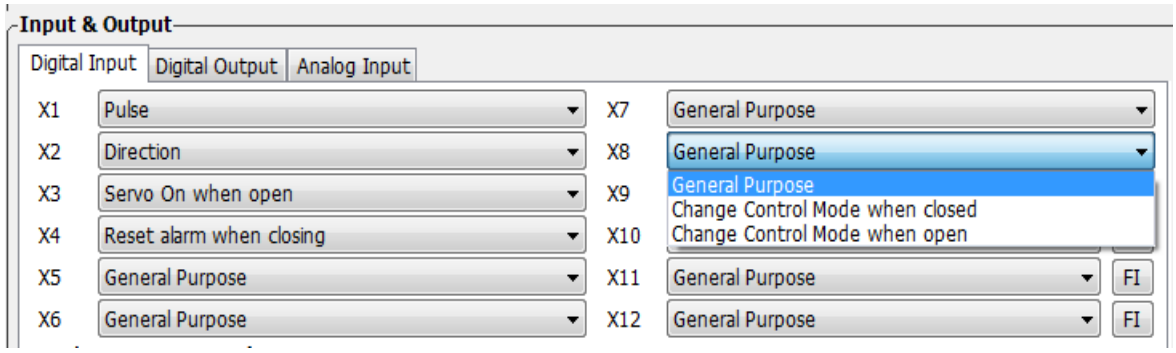

7.1.6 Drive On Fault Output

When faults occur, the drive will send an “on-fault” output and will also disable the drive immediately.

Faults include: position error, encoder error, over temperature, over voltage, low voltage, internal voltage fault, STO warning, FPGA error, over current, over velocity limit, bad hall sensor. The “On-Fault” output signal can be set by P-65 (AO), on the drive’s control panel.

Signal Name	PIN	P-65 (AO)	Condition	Function
Y1	Y1+ (37) Y1- (36)	□2□□	Closed	When no warning, output is closed
			Open	When warning occurs, output is open
		□1□□	Closed	When warning occurs, output is closed
			Open	When no warning, output is open
		□3□□ (Default)		General purpose output, function disabled

Software Configuration

In drive configuration page-------Input & Output; select Y1 function to setup.

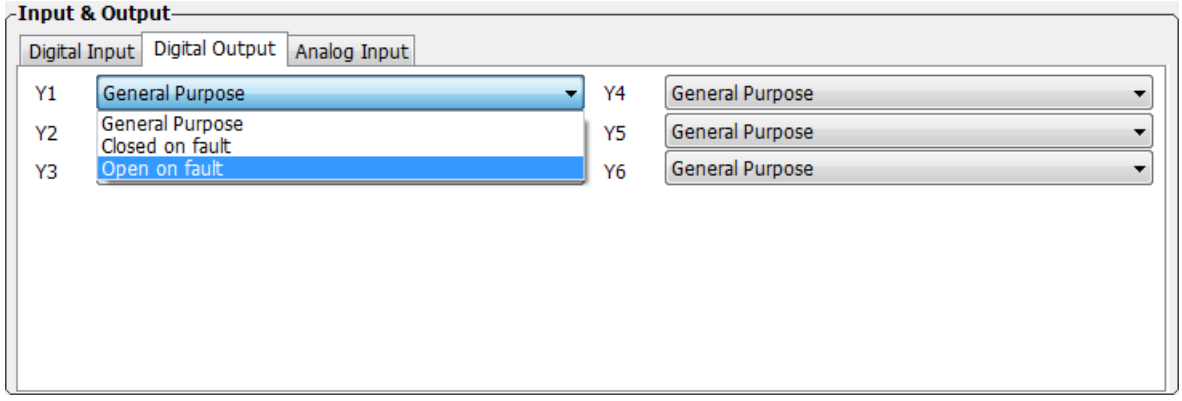

7.1.7 Motor Brake Control

A servo motor brake is only to be used for holding the load when the motor is disabled or powered OFF. It ensures that the motor's rotor (and connected load) will NOT move due to gravity or any other external forces.

In order to prevent damage to the brake, there are delay sequences that are executed during the brake operation. Use caution when setting up the brake operation sequence.

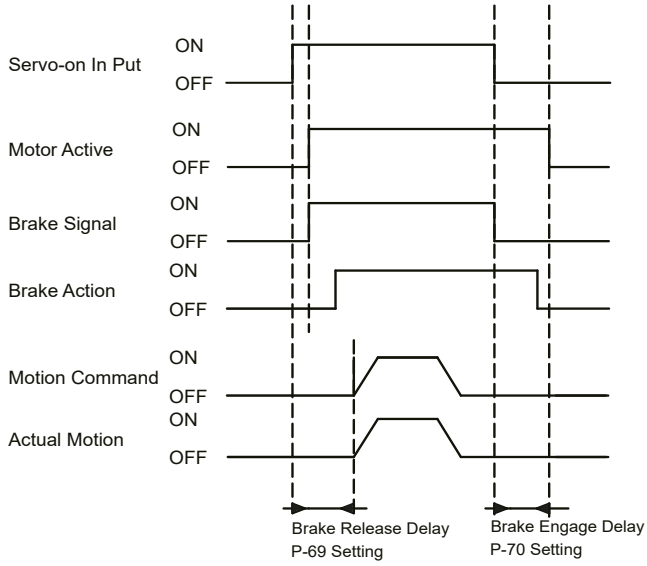

The Brake Output (BO) setting can be configured with the SVX Servo Suite software or with parameter P-67(BO), as shown in the table below. Brake disengage delay and engage delay times can be configured via SVX ServoSUITE®, or by changing parameters P-69 (BD) and P-70 (BE) directly from the drive.

To avoid accidental damage to the motor brake, it is highly recommended that these brake output settings be configured in the software.

NOTE: Do not wire brake directly to drive's brake output because it is only rated for 100mA max. See relay wiring diagram in Electromagnetic Brake section.

Name	PIN	P-67(BO)	Condition	Function
Y2	Y2+ (11) Y2- (10)	2	Closed	Engage brake, brake holds the motor shaft
			Open	Release brake, brake releases the motor shaft
		1	Closed	Release brake, brake releases the motor shaft
			Open	Engage brake, brake holds the motor shaft
		3 (default)		General purpose input, output function disabled

Software Configuration

In drive configuration page------Input & Output; select Y2 function to setup.

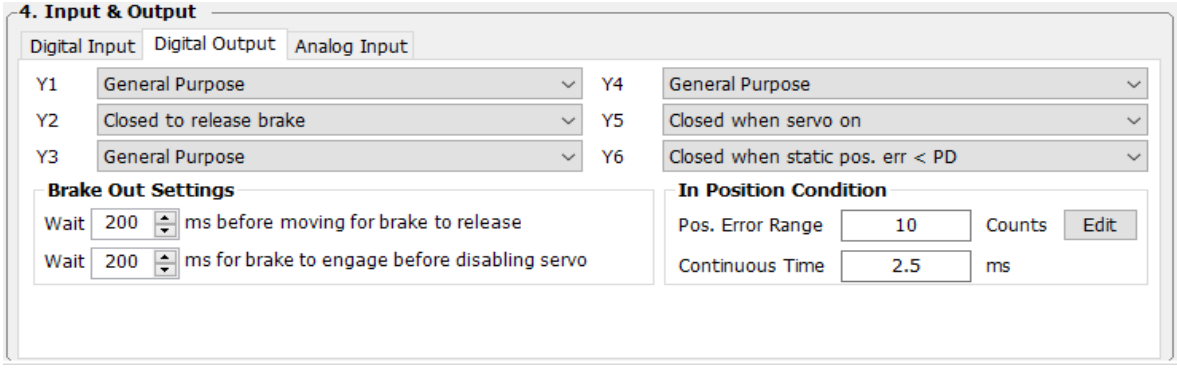

7.1.8 Servo Ready Output

When the servo drive is powered on, if no faults are present, the Y3 output can be configured output a "servo ready" signal.

This servo ready function can be configured via SVX Servo Suite software, or by changing parameter P-68 (MO) the first digit (from right to left) on the drive's control panel.

Signal Name	PIN	P-68(MO)	Condition	Function
Y3	Y3 (42) OUT- (33)	□□□E	Closed	Closed when servo is not ready
			Open	Open when servo is ready
		□□□D (default)	Closed	Closed when servo is ready
			Open	Open when servo is not ready
		□□□3		General purpose, function disabled

Software Configuration

On the Drive Configuration page - Input & Output select Y5 output to set up.

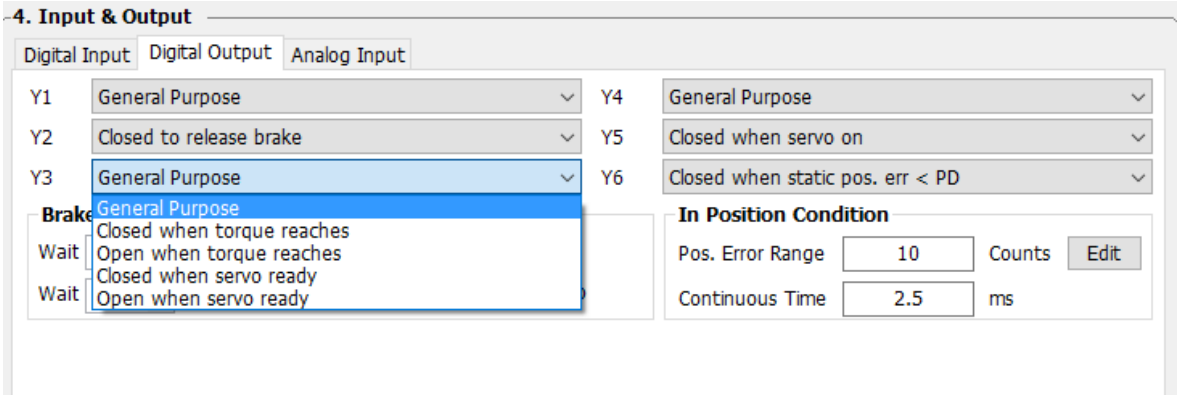

7.1.9 Servo On Status Output

Output signal Y5 can be configured as Servo-ON Status signal

When the Drive is at Servo-ON status, the signal will have a output signal

This servo ready function can be configured via SVX Servo Suite software, or by changing parameter P-68 (MO) the third digit (from right to left) on the drive's control panel.

Signal Name	PIN	P-68(MO)	Condition	Function
Y5	Y5+ (40) Y5- (41)	□2□□	Closed	Closed when servo is not ready
			Open	Open when servo is ready
		□1□□ (default)	Closed	Closed when servo is ready
			Open	Open when servo is not ready
		□3□□ (default)		General purpose, function disabled

Software Configuration

On the Drive Configuration page - Input & Output select Y5 output to set up.

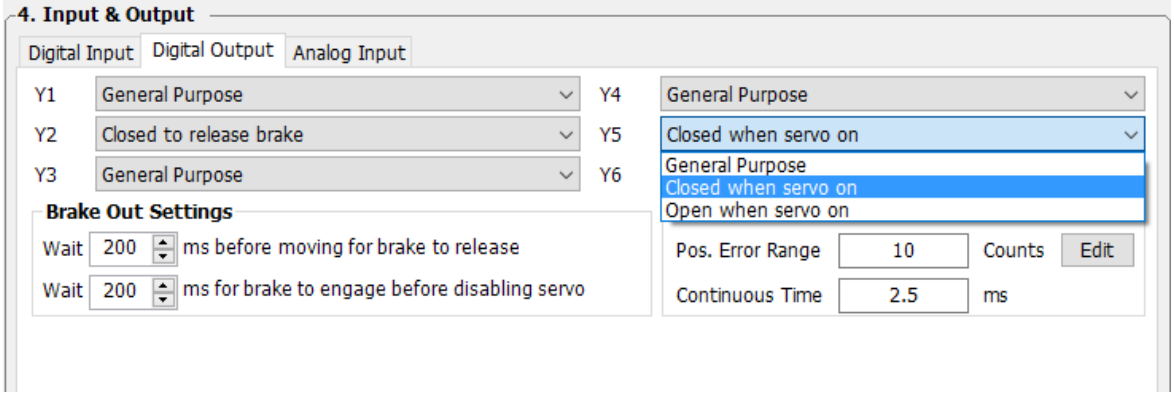

7.1.10 Timing Diagram

7.1.10.1 Timing Diagram at Power up

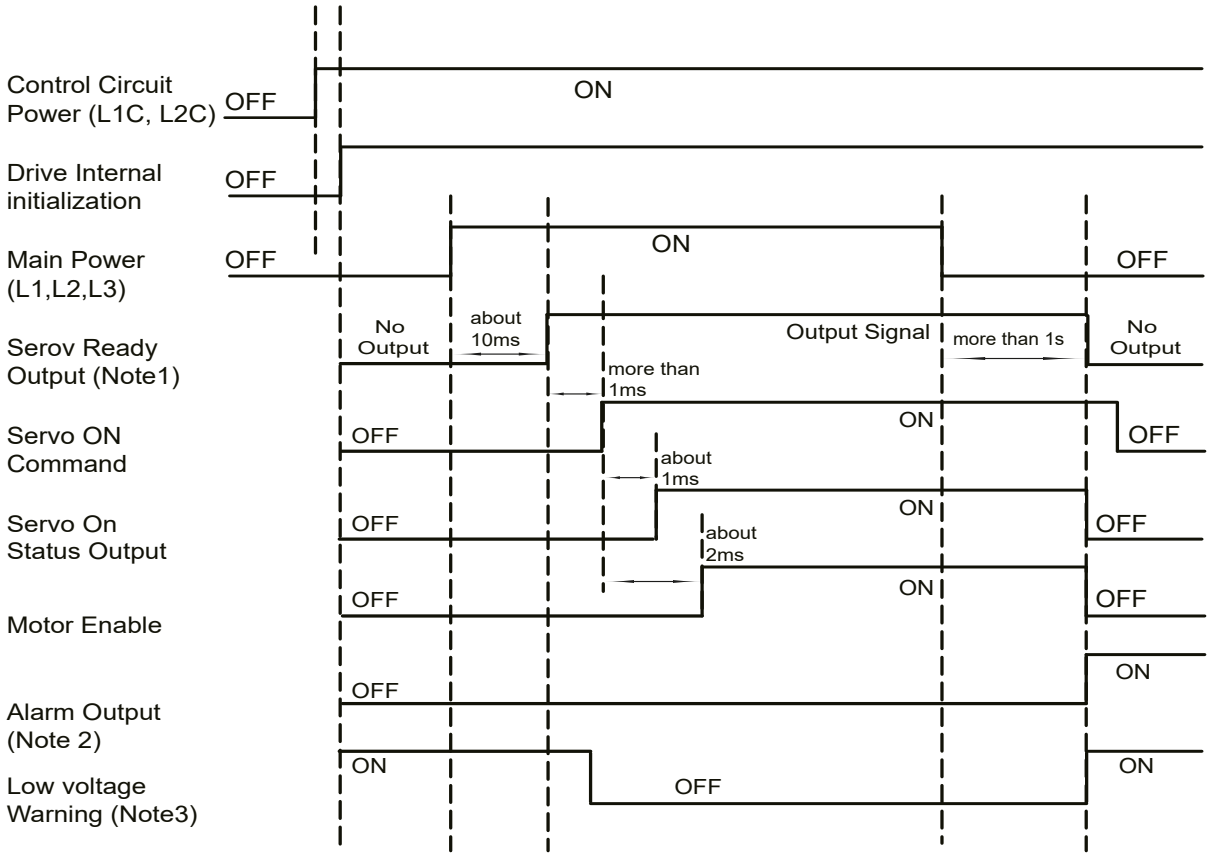

Note 1: When the Main power circuit is powered off, it will take more than 1 second for the internal capcatior to discharge befre Servo Ready signal is OFF

Note 2: If the dirve main Power Circuit is powered off during Servo ON status. There might be serial alaem shown from the drive: Volateg warning (warning), Low Voltage Fault (Fault), Position Error (Fault) if motor was in motion before Power off.

Note 3: If main power is not turned on, Drive will not be in Servo ready mode, Low voltage warning will also shown from the drive.

7.1.10.2 Timing Diagram for Fault alarm

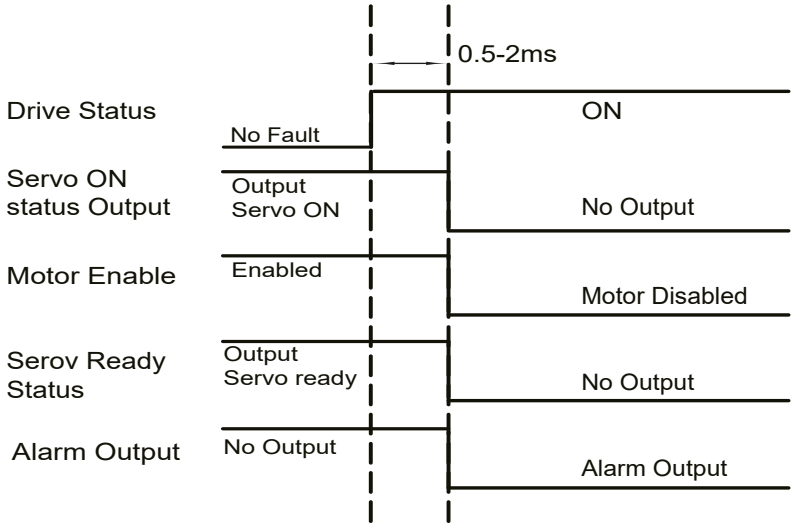

7.2 Position Mode

Position mode is widely used in applications where precise positioning is required. In SV200 series AC servo drives there are 3 types of position mode: digital pulse position mode, analog position mode and position table mode.

Mode	Control Signal	P-12 (CM) definitions	Description
Digital pulse position mode	Pulse & Direction CW/CCW Pulse A/B Quadrature	7	Up to 500KHz open collector input signal or up to 2MHz differential input signal
Analog position mode	+10V~-10V Analog signal	22	Use analog voltage signal for position control
Position table	Digital input signal	25	Two motion control modes: linear motion with maximum of 64 position set points, and rotary motion with maximum of 32 position division points

NOTE: Configuration setting by SVX Servo Suite is recommended.

7.2.1 Digital Pulse Position Mode Connection Diagram

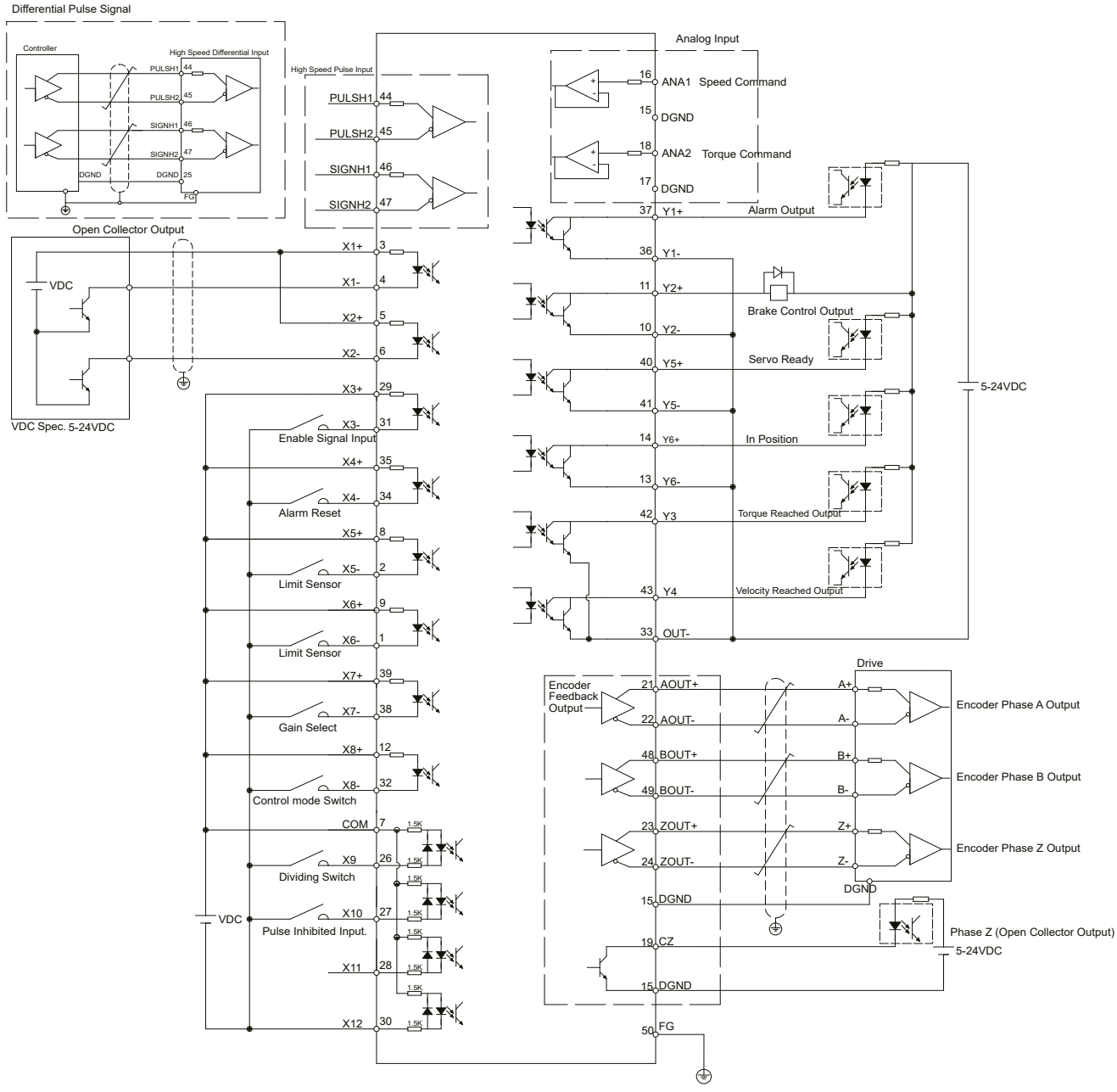

7.2.2 Input Pulse Type And Input Noise Filter

There are three types of pulse modes: STEP & Direction; CW/CCW Pulse; A/B Quadrature.

Parameter P-43 (SZ) uses decimal numbers to define pulse input type, polarity and input filter frequency. Transferred into a binary number, the HIGHER 8 bits of the number defines input filter frequency, and the LOWER 8 bits defines pulse input type and polarity.

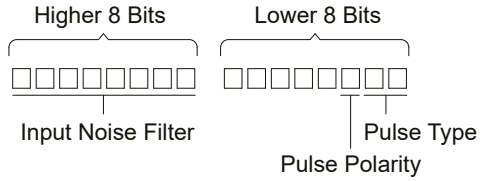

7.2.3 Input Pulse Type Setting

Parameter	Pulse	CW direction setting	CW	CCW	setting value decimal
P-42 (SZ) Lower 8 bits	Step & Direction	X2 on	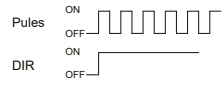	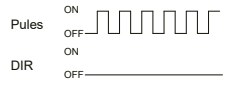	0
		X2 Off	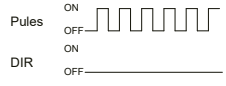	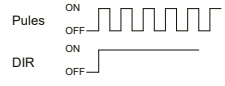	4
	CW/CCW	Pulse On X1	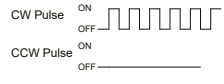	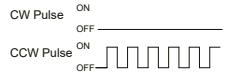	1
		Pulse On X2	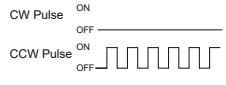	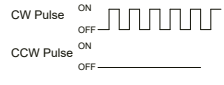	5
	A/B Quadrature	X1 Lead X2	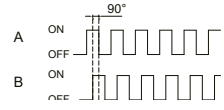	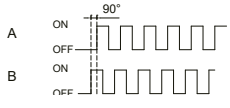	2
		X2 Lead X1	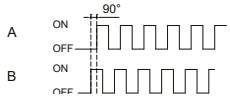	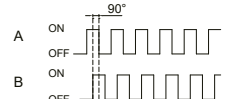	6

7.2.4 Input Noise Filter Setting

The input noise filter is a low pass filter. When the pulse input and output duty cycle is set to 50%, the P-43 (SZ) setting values are as follows:

Parameter	setting value (decimal)	Filter Frequency	setting value (decimal)	Filter Frequency
P-42 (SZ) Higher 8 bits	25344	100K	4864	500K
	16640	150K	3072	750K
	12544	200K	2304	1M
	9984	250K	1792	1.2M
	8192	300K	1280	1.5M
	6144	400K	1024	2M

Parameter P-43 (SZ) Setting

Parameter P-43 (SZ)'s higher 8 digits and lower 8 digits set the definition for input filter frequency and pulse type, the setting values are as shown in table below:

Filter Frequency	pulse type	CW/CCW condition	P-43 (SZ) setting value	Filter Frequency	pulse type	CW/CCW condition	P-43 (SZ) setting value
100K	Step & Direction	X2 on	25344	500K	Step & Direction	X2 on	4864
		X2 Off	25348			X2 Off	4868
	CW/CCW	Pulse On X1	25345		CW/CCW	Pulse On X1	4865
		Pulse On X2	25349			Pulse On X2	4869
	A/B Quadrature	X1 Lead X2	25346		A/B Quadrature	X1 Lead X2	4866
		X2 Lead X1	25350			X2 Lead X1	4870
150K	Step & Direction	X2 on	16640	750K	Step & Direction	X2 on	3072
		X2 Off	16644			X2 Off	3076
	CW/CCW	Pulse On X1	16641		CW/CCW	Pulse On X1	3073
		Pulse On X2	16645			Pulse On X2	3077
	A/B Quadrature	X1 Lead X2	16642		A/B Quadrature	X1 Lead X2	3074
		X2 Lead X1	16646			X2 Lead X1	3078
200	Step & Direction	X2 on	12544	1M	Step & Direction	X2 on	2304
		X2 Off	12548			X2 Off	2308
	CW/CCW	Pulse On X1	12545		CW/CCW	Pulse On X1	2305
		Pulse On X2	12549			Pulse On X2	2309
	A/B Quadrature	X1 Lead X2	12546		A/B Quadrature	X1 Lead X2	2306
		X2 Lead X1	12550			X2 Lead X1	2310
250K	Step & Direction	X2 on	9984	1.2M	Step & Direction	X2 on	1792
		X2 Off	9988			X2 Off	1796
	CW/CCW	Pulse On X1	9985		CW/CCW	Pulse On X1	1793
		Pulse On X2	9989			Pulse On X2	1797
	A/B Quadrature	X1 Lead X2	9986		A/B Quadrature	X1 Lead X2	1794
		X2 Lead X1	9990			X2 Lead X1	1798
300K	Step & Direction	X2 on	8192	1.5M	Step & Direction	X2 on	1280
		X2 Off	8196			X2 Off	1284
	CW/CCW	Pulse On X1	8193		CW/CCW	Pulse On X1	1281
		Pulse On X2	8197			Pulse On X2	1285
	A/B Quadrature	X1 Lead X2	8194		A/B Quadrature	X1 Lead X2	1282
		X2 Lead X1	8198			X2 Lead X1	1286
400K	Step & Direction	X2 on	6144	2.0M	Step & Direction	X2 on	1024
		X2 Off	6148			X2 Off	1028
	CW/CCW	Pulse On X1	6145		CW/CCW	Pulse On X1	1025
		Pulse On X2	6149			Pulse On X2	1029
	A/B Quadrature	X1 Lead X2	6146		A/B Quadrature	X1 Lead X2	1026
		X2 Lead X1	6150				1030

Software Configuration

On the software motor configuration page----use the Control Mode Settings area to select pulse input type. The Input Noise Filter setting can be found at the bottom of the Input & Output area.

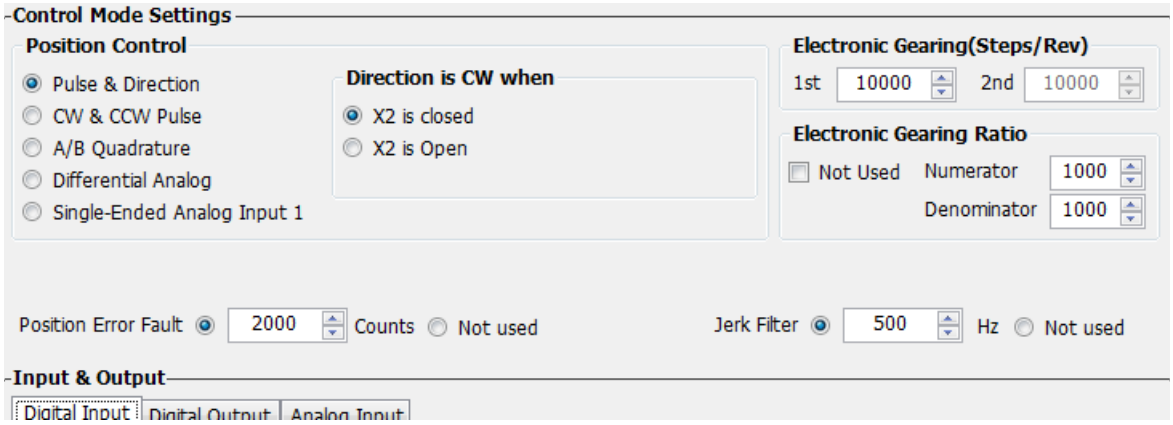

7.2.5 Input Pulse Dividing Ratio Setting and Dividing Switch

Input X9 is used as the control pulse dividing switch function. When this function is on, it will allow the drive to change the number to encoder counts per motor revolution

7.2.5.1 The pulse dividing ratio setting

The pulse dividing ratio sets the number of pulse input count per motor revolution.

The first pulse dividing ratio is set via parameter P-39 (EG), the second pulse dividing ratio is set via P-40 (PV).

Note: if you using drive's control panel for configuration, please refer to the follow :

Drive Display value = EG x 2

Where **EG** is the target pluse count per rev, unit counts

Software Configuration

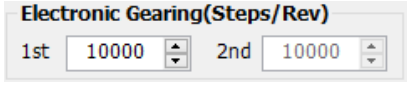

7.2.5.2 Control Pulse Dividing Switch Function

Input X9 is used as the control pulse dividing switch function. When this function is on, it will allow the drive to change the number to encoder counts for per motor revolution. The first pulse dividing ratio is set via parameter P-39 (EG), the second pulse dividing ratio is set via P-40 (PV). The second digit of P-65 (MI) (right to left) is used to set switching conditions.

In factory default mode, pulse dividing switch is disabled. It can be set by SVX ServoSUITE® or parameter P-65 (MI) directly from the drive's panel.

Signal Name	PIN	P-65 (MI)	Condition	Function
X9	X9 (26)	□□1□	Closed	Use 1st pulse dividing ratio ------ P-39 (EG)
			Open	Use 2nd pulse dividing ratio ------ P-40 (PV)
		□□2□	Closed	Use 2nd pulse dividing ratio ------ P-40 (PV)
			Open	Use 1st pulse dividing ratio ------ P-39 (EG)
		□□3□ (default)		Always use 1st pulse diving ratio ----P-39(EG)

NOTE: ONLY set the pulse dividing ratio function when no pulse command is being sent into the drive

(i.e. when motor is NOT moving).

Software Configuration

In drive configuration page-------Input & Output; select X9 function to setup pulse dividing switch function.

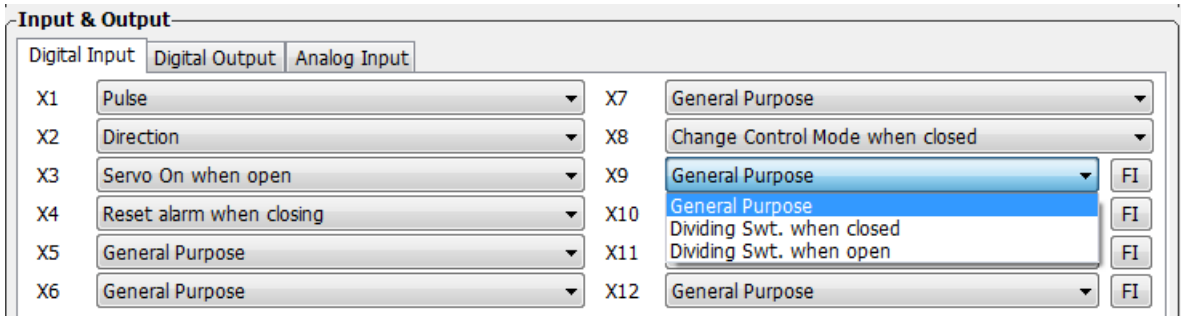

7.2.6 Pulse Inhibit Function

The Pulse Inhibit function uses external input X10 in digital pulse position mode. When external input X10 is triggered, it will force the drive to stop receiving pulses input from any source, and stop the servo motor immediately.

In factory default mode, this function is disabled. It can be set via SVX ServoSUITE® or P-65 (MI) directly from the drive's control panel.

Signal Name	PIN	P-65 (MI)	Condition	Function
X10	X10 (27)	2□□□	Closed	Allow input pulse
			Open	Disallow input pulse
		1□□□	Closed	Disallow input pulse
			Open	Allow input pulse
		3□□□ (default)		General purpose input, function disabled

Software Configuration

In drive configuration page-------Input & Output; select X10 function to setup pulse Inhibit function.

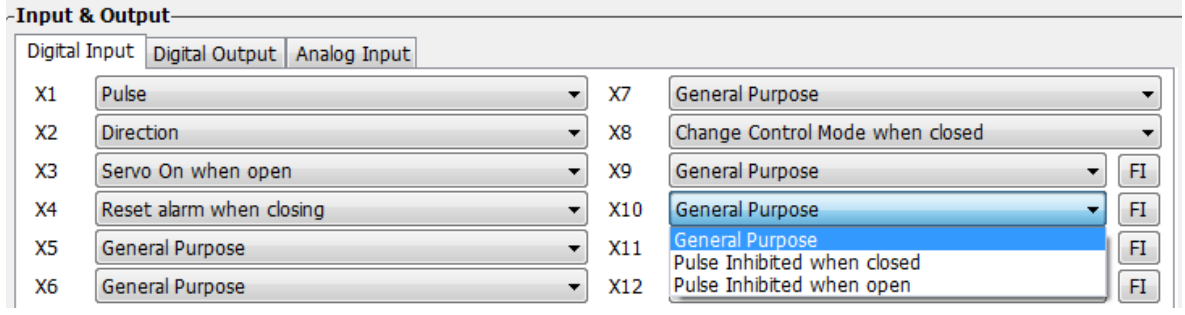

7.2.7 Electronic Gearing Ratio

The host command pulse count per revolution times the electronic gearing ratio set on drive will result in the actual number of pulses per revolution at the motor shaft. This feature allows more freedom and setup flexibility when a certain pulse count or moving counter is required.

For instance, the step pulse per revolution is 10000 pulse/rev and the electronic gearing ratio is set to 1. In this case, when the host sends 10000 pulses, the motor will turn 1 revolution. If the electronic gearing ratio is set to 1/2, then the motor will move only 1 pulse position for every 2 pulses the drive receives from the host (i.e. 20000 pulses for 1 motor revolution). In some cases, the electronic gearing ratio can simplify the calculation for the host when sending pulse commands.

Linear Actuator Example

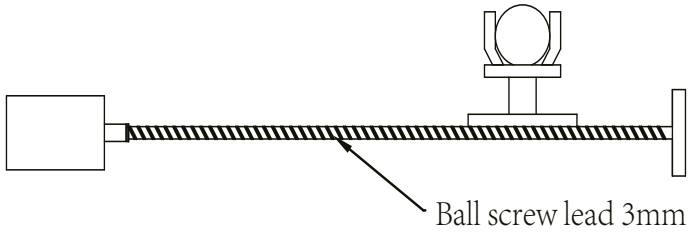

Distance for screw lead move requirement = 4mm.

If no electronic gearing is used, the following pulse count example illustrates the dilemma:

Because the screw lead is 3mm (i.e. when the motor rotates 1 rev, the load moves 3mm), when a move distance of 4mm, it is 4/3 of rev.

Pulse Count Requirement:

If 1 motor rev requires 10000 pulses, then $10000 \times \frac{4}{3} = 13333.33333\cdots$ pulses

This leads to an infinitely repeating number with cumulative error in the pulse counter.

If using an electronic gearing ratio:

If 1 pulse is set to 1um, and there are 10000 pulses per rev, the Electronic gearing ratio can be set as follows:

$$\frac{3000}{10000} \times \frac{a}{b} = 1um$$

If the Electronic gearing ratio is set to $\frac{a}{b} = \frac{10}{3}$, then 1 pulse sent by the host, leads to 1um of movement at the load.

Parameter Settings

Parameter	Name	Data Range	Default	LED Display	Description
P-39 (EG)	Required pulse per rev	200~51200	10000	5000	Set Required pulse per rev
P-40 (PV)	Secondary Required pulse per rev	200~51200	20000	10000	Set secondary Required pulse per rev
P-41 (EN)	Electronic gearing Ratio Numerator	1~1000	1000	1000	Set Electronic gearing Ratio Numerator
P-42 (EU)	Electronic gearing Ratio Denominator	1~1000	1000	1000	Set Electronic gearing Ratio Denominator

7.2.8 Jerk Smoothing Filter

Applying this dynamic filter on speed and direction signals can significantly smooth motor rotary motion, and minimize wear on mechanical system components.

Jerk smoothing filter effects are as follows:

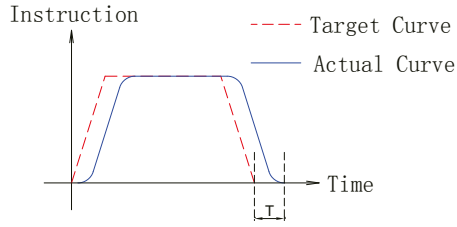

1) The smaller value of P-07 (KJ), the stronger the effect it will be.

2) Jerk smoothing filter will cause command delay time T, but it will not effect in position accuracy.

Parameter Setting

Parameter	Name	Data Range	Default	LED Display	Description
P-07 (KJ)	Jerk Filter Frequency	0~5000	5000	5000	Set jerk smoothing filter parameter

NOTE: Setting to 0, means no filter effect.

7.2.9 In-Position Error Output

In position mode, using the "in-position error output" function can help the user define the motor's in-position status. When the difference between drive's total pulses received and motor's actual rotating pulse count is within the in position error range, the drive will send out a motor in position signal.

The forth digit of parameter P-68 (MO) defines Y6 output function. parameter P-46 (PD) defines the in- position error range. P-47 (PE) defines in position error time duration. If the in position error is within the P-46 (PD) range for more than the time duration of P-47 (PE) setting, the drive will output the motor in position signal.

Signal Name	PIN	P-68 (MO)	Condition	Function
Y6	Y6+ (14) Y6- (13)	5□□□	Closed	Closed means motor not in position
			Open	Open means motor in position
		4□□□	Closed	Close means motor in position
			Open	Open means motor not in position
		3□□□ (default)		General purpose output, function disabled

Parameters Setting

Parameter	Name	Data Range	Default	LED Display	Description
P-46 (PD)	In position error range	0~32000	10	10	This parameter sets the in position error range, when in position error count is less than the range, drive will indicate motor in position.
P-47 (PE)	In position duration count	0~32000	10	10	If the position error is in the in-position range and lasts longer than the duration time, the motion is considered to be complete and the motor is in position. If the time value is set to 100 the position error must remain in the range for 100 processor cycles before the motion is considered to be complete. One processor cycle is 250μsec.

7.2.10 Gain Parameters For Position Control Mode

In position mode, proper gain parameters will cause the servo system to run and stop more smoothly and accurately, thereby optimizing its performance.

In most the cases, SVX ServoSUITE® software's auto tuning function will help to automatically tune these parameters. However, in some cases the fine tuning function from the software or parameter setting mode on the drive may be needed to optimize performance.

Parameter	Name	Data Range	Default	LED Display
P-00(KP)	Global gain 1	0~32767	8000	8000
P-01(KG)	Global gain 2	0~32767	12000	12000
P-02(KF)	Proportional Gain	0~32767	10000	10000
P-03(KD)	Derivational Gain	0~32767	2000	2000
P-04(KV)	Damping Gain	0~32767	8000	8000
P-05(KI)	Integrator gain	0~32767	500	500
P-06(KK)	Inertia Feedforward Constant	0~32767	800	800
P-07(KJ)	Jerk Filter Frequency	0~32767	5000	5000
P-10(KE)	Deriv Filter factor	0~32767	15000	15000
P-11(KC)	PID Filter factor	0~32767	20000	20000

7.2.11 Software Configuration For Position Mode

The SVX ServoSUITE® allows for easy configuration of the drive and motor, as well as optimization of tuning parameters.

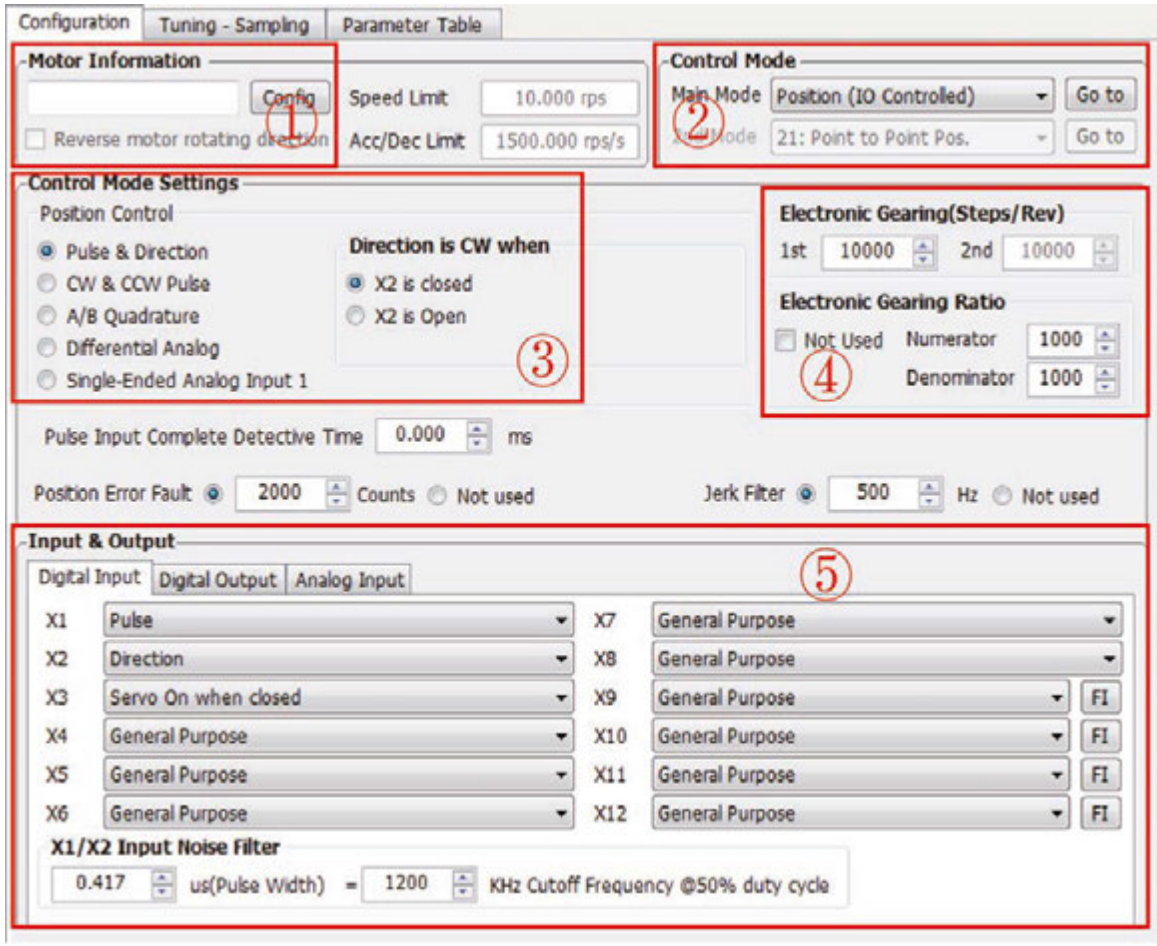

Step	Operation	Description
1st	Configure motor	Choose your motor model. Please refer to 2.3 motor number for details.
2nd	Choose control mode	In control mode, choose “Position” for position mode.
3rd	Control mode configuration	Choose specified input pulse type, Please refer to 4.8.3 CN2 input signal connections and and 7.2 position mode.
4th	Set electronic gearing ratio	Please refer to 7.2.5 for electronic gearing ratio settings.
5th	Setup Input and Output functions	Refer to 4.8.3 CN2 connections, and 7.2 position mode and 7.1 general function settings.

7.3 Velocity Mode

The velocity control mode is used for applications that require precise velocity control. For SV200 AC servo drives, there are 4 types of velocity control: fixed-speed mode, analog command mode, SCL control mode and multi-velocity control mode. Fixed-speed mode will set the motor running at a constant speed. For analog command mode, velocity is controlled by external voltage input. SCL is a unique software command tool designed by Applied Motion. For multi-velocity control mode, the drive uses external inputs to set up different velocity values. There are up to 8 different velocity values that can be set.

Mode	Control Signal	P-12 (CM) Definitions	Description
Analog velocity mode	+10~-10V Analog signal	11	Analog velocity mode, NO run/stop signal, X2 is direction switch.
Analog velocity mode	+10~-10V Analog signal	12	Analog velocity mode, X1 is run/stop signal, X2 is direction switch.
Velocity Mode	Digital input signal	15	Profile velocity mode, after drive is enabled. The drive will run at velocity set by P-22 (JS). NO run/stop signal, X2 is direction switch
Velocity Mode	Digital input signal	16	Profile velocity mode, after drive is enabled. The drive will run at velocity set by P-22 (JS). X1 is run/stop switch, X2 is direction switch
In-position error output	Digital output signal	17	Profile velocity mode, NO run/stop signal. X2 is direction switch. X10, X11, X12 is speed selection switch.
In-position error output	Digital output signal	18	Profile velocity mode, X1 is run/stop switch. X2 is direction switch. X10, X11, X12 is speed selection switch.

NOTE: It is highly recommended that the SVX ServoSUITE ® software be used to configure velocity mode.

7.3.1 Velocity Mode Connection Diagram

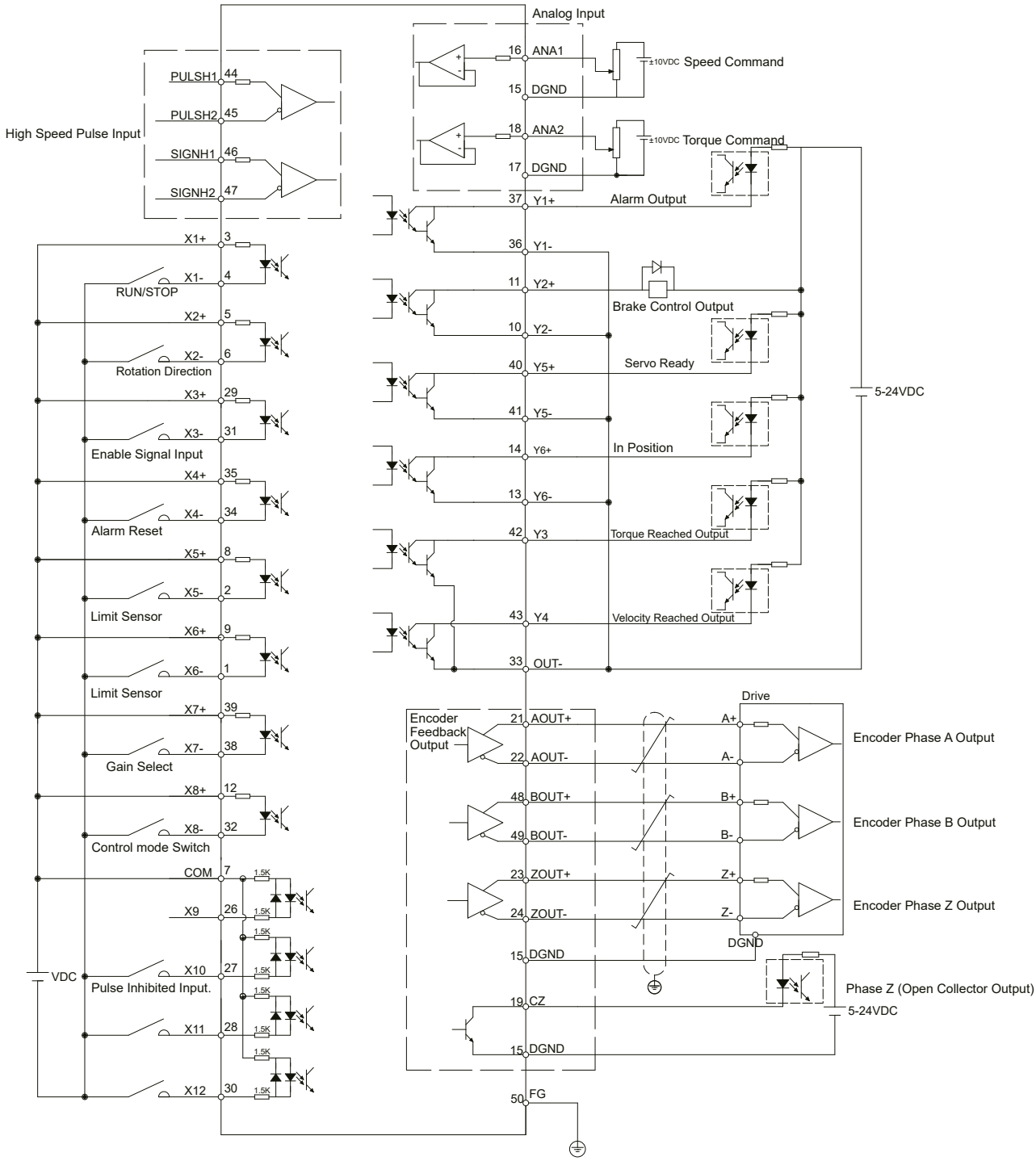

7.3.2 Parameter Settings For Analog Velocity Control Mode

SV200 series AC servo drive has two (2) 12-bit analog A/D converters. When a single-ended input signal is used, analog input 1 (ANA1) is used for the velocity command and analog input 2 (ANA2) is used for the torque limit setting. Differential input via ANA1/ ANA2 is also available. In addition, a low pass filter, analog offsets and deadband values can be set in the drive.

Parameter	Name	Data Range	Default	Unit	LED Display	Description
P-12 (CM)	Main control mode	1~8,10~18,21,22	7		7	Drive's main control mode selection
P-13 (CN)	Secondary control mode	1~8,10~18,21,22	21		21	Drive's secondary control mode selection
P-15(JM)	Jog mode	1~2	2		2	choose velocity control mode
P-50 (AG)	Analog Velocity Gain	-100~100	20	Rps	4800	Motor rotating velocity when analog voltage is 10VDC
P-51 (AN)	Analog Torque Gain	-20~20	1(note 2)	A	100	Motor rotating torque when analog voltage is 10VDC
P-52 (AV1)	Analog voltage offset 1	-10~10	0	V	0	Set analog voltage input 1 offset value
P-53 (AV2)	Analog voltage offset 2	-10~10	0	V	0	Set analog voltage input 2 offset value
P-54 (AV3)	Analog voltage offset (differential)	-10~10	0	V	0	Set differential analog voltage input offset value
P-55 (AS)	Analog input type	0~1	0		0	Analog input type
P-56 (AD1)	Analog deadband 1	0~255	0	mV	0	Set analog input 1 deadband offset value
P-57 (AD2)	Analog deadband 2	0~255	0	mV	0	Set analog input 2 deadband offset value
P-58 (AD3)	Analog deadband (differential)	0~255	0	mV	0	Set analog differential input deadband offset value
P-59 (AF)	Analog input low pass filter	1~15990	500		14418	Analog input noise filter
P-60 (AT)	Analog trigger point	-10~10	0.000	V	0.000	
P-61 (FA1)	Define Analog input 1 function	1~3	3		□3	Define Analog input 1 function
P-61 (FA2)	Define Analog input 2 function	1~3	3		3□	Define Analog input 2 function

NOTE:

1. **The units shown in the table above might be different from the LED display units on the drive. Please refer to Chapter 8 for details.**
2. **Default might be different based on Drive models**

7.3.3 Basic Settings For Analog Velocity Control Mode

7.3.3.1 Command Signal For Analog Velocity Mode

In Analog input velocity mode, both single-ended and differential connection types are acceptable.

A. Single Ended Analog Input

PIN type	Signal	PIN number	Function
Input	ANA1	16	Analog velocity input signal
	DGND	15	Analog velocity input signal reference (digital ground)

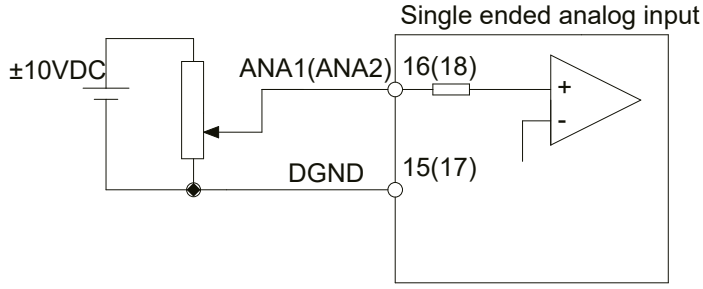

B. Differential Analog Input

PIN type	Signal	PIN number	Function
Input	ANA1	16	Analog velocity input for differential input signal
	ANA2	18	
	DGND	15	Analog velocity input signal reference (digital ground)

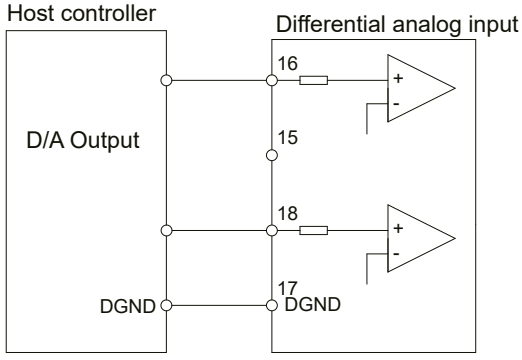

7.3.3.2 Analog Velocity Gain

Analog input voltage range is between -10V~+10V. In analog velocity mode, setting the velocity value and corresponding input voltage value is required. This can be set via SVX ServoSUITE® or P-50 (AG) from the drive's control panel.

Parameter	Name	Data Range	Default	Unit	LED Display	Description
P-50 (AG)	Analog Velocity Gain	-100~100	20	rps	4800	The corresponding motor rotary velocity for 10vdc analog input voltage.

NOTE: When viewing or setting the velocity value on drive's control panel, please refer to following calculation:

Drive display value= ***V*** x 240

V is target setting velocity in rev/second (rps)

Setting Via Software:

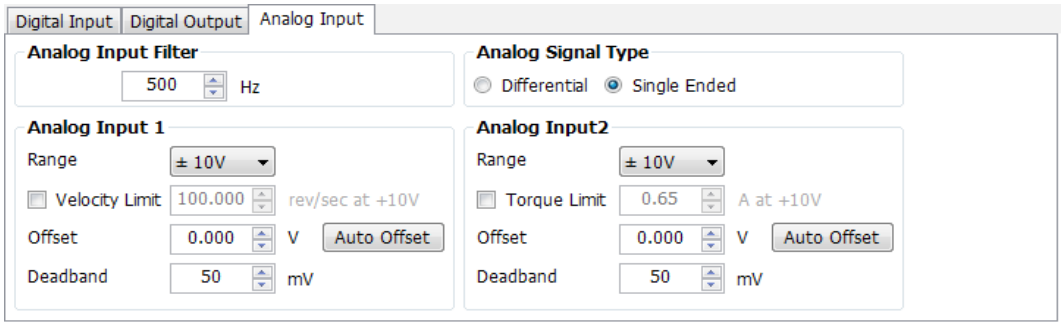

7.3.3.3 Analog Input Voltage Offset

In some cases, even when the host controller sets the analog command to 0V, the servo motor might still rotate slowly. This is caused by a voltage bias from the analog voltage supply. SVX ServoSUITE® can automatically offset the analog voltage bias, or users can manually adjust the voltage offset value by changing parameter P-52 (AV1) and P-53 (AV2).

Parameter	Name	Data Range	Default	Unit	LED Display	Description
P-52 (AV1)	Analog input 1 offset	-10~10	0	V	0	Set Analog input 1 offset
P-53 (AV2)	Analog input 2 offset	-10~10	0	V	0	Set Analog input 2 offset
P-54(AV3)	Differential Analog offset	-10 - 10	0	V	0	Set differential analog input offset

NOTE: To display play or change the value on the driver's LED display, please refer to following calculations:

Drive display value= ***A*** x 2730

A is target setting offset, unit Voltage (V)

Setting Via Software

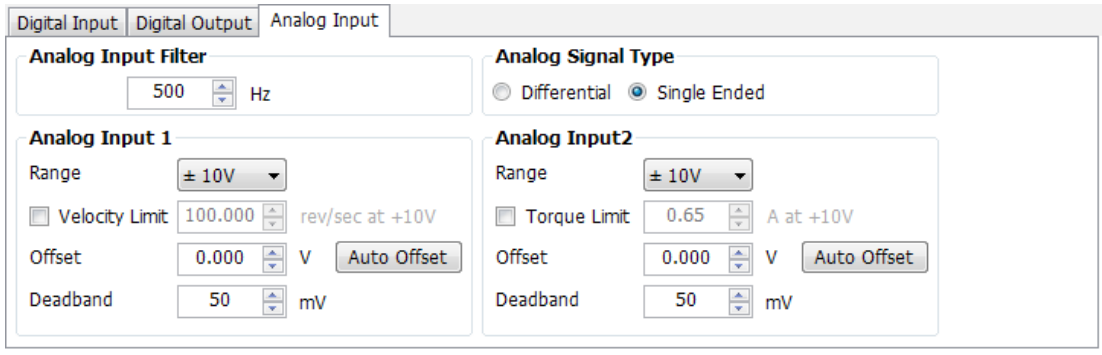

7.3.3.4 Analog Input Deadband

In analog control mode, even when the input voltage is 0V, it is almost impossible to ensure that the input voltage is absolutely 0V due to external interference. In some cases, this might cause the motor to turn slowly in either direction. Therefore, it is recommended that a reasonable deadband value be set to prevent this issue.

The analog input deadband can be configured via SVX ServoSUITE® or parameter P-56 (AD1) directly from the drive's control panel.

Parameter	Name	Data Range	Default	Unit	LED Display	Description
P-56 (AD1)	Deadband for analog input 1	0~255	0	mV	0	Set deadband for analog input 1
P-56 (AD3)	Differential analog Deadband	0~255	0	mV	0	Set deadband for differential analog input

Setting Via Software

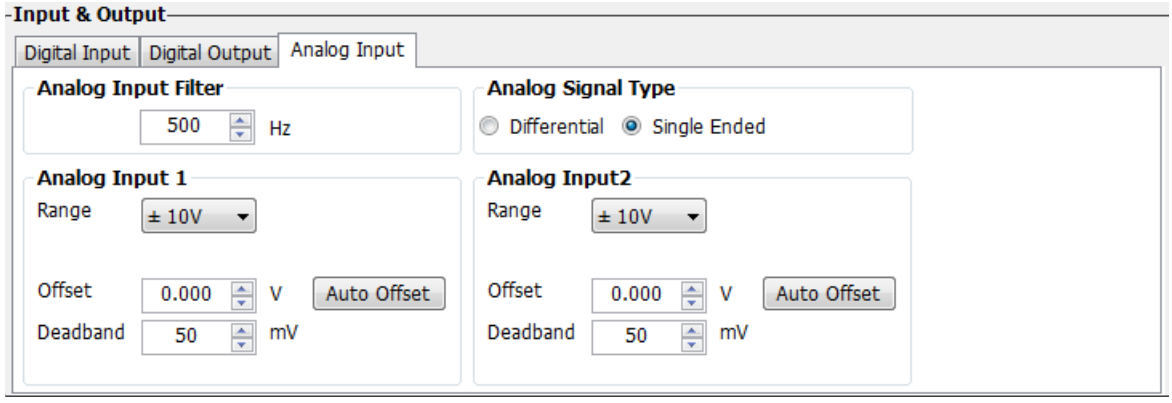

7.3.3.5 Run/Stop And Direction Signal

In analog velocity mode, external input X1 can be set as the run/stop switch and X2 can set as the direction switch.

Signal Name	PIN	Signa	Function	Description
X1	X1+ (3)	Closed	Velocity mode run/stop switch	Motor running, analog voltage value defines rotary velocity.
	X1- (4)	Open		When switch is open, Motor stops rotary regardless of analog input voltage.
X2	X2+ (5)	Closed	Velocity mode run/stop switch	Change motor rotating direction.
	X2+ (5)	Open		Not in use.

Setting Via Software

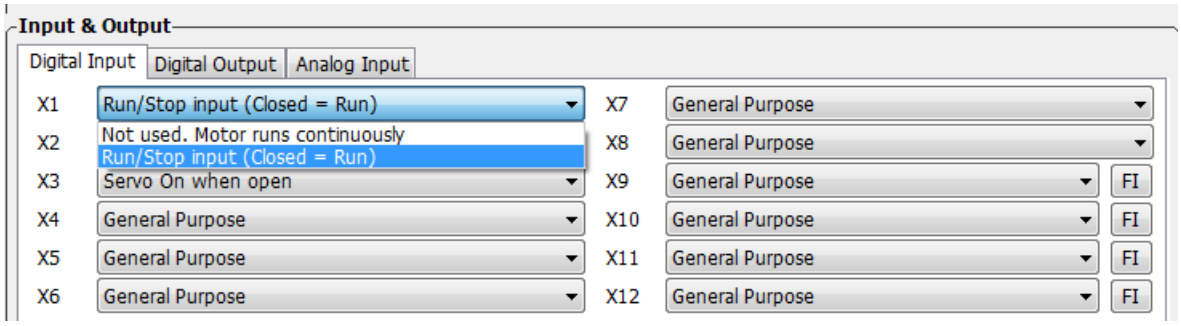

7.3.3.6 Torque Limit

In single-ended analog mode, analog input 2 (ANA2) can used to set the motor's output torque.

Parameter	Name	Data Range	Default value	Unit	LED Display	Description
P-55 (AS)	Analog type	0~1	0		1	Analog input type 0: Single ended input 1: Differential input
P-62 (FA2)	Analog 2 function setting	1~3	3		3□	Analog input port 2 function setting□ 2: Torque limit setting 3: Not in use
P-51 (AN)	Analog Torque Gain	Based on drive's output ability	1	A	100	Sets corresponding torque output value against 10VDC input voltage.

NOTE: When viewing or setting this value on drive's control panel (P-51 (AN)), please refer to following calculation:

$$\text{Drive display value} = \underline{\boldsymbol{A}} \times 100$$

where $\underline{\boldsymbol{A}}$ is target torque output value

Setting Via Software

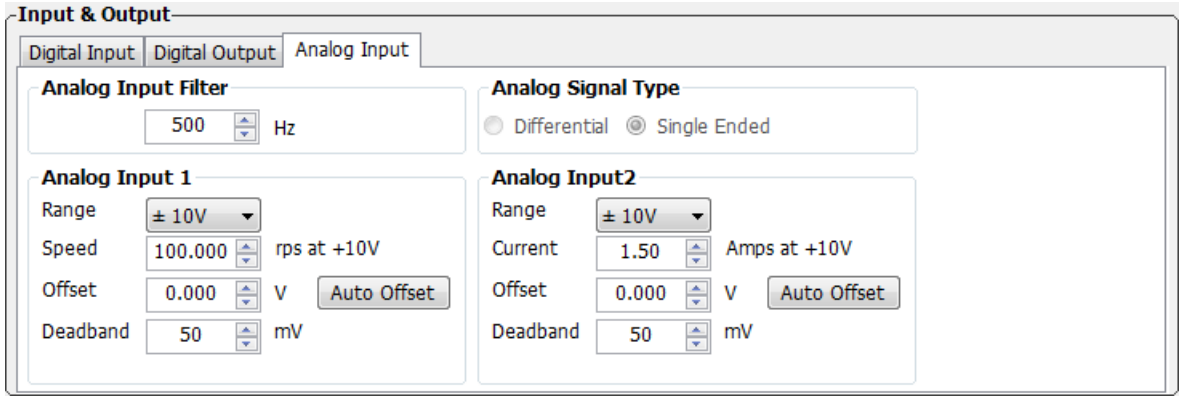

7.3.3.7 Target Velocity Reached

In velocity mode, when the motor's actual velocity and commanded target velocity are the same, the "velocity reached" output signal can be sent by output Y4 .

The second digit (from right to left) of parameter P-68 (MO) defines the output signal Y4.

Signal Name	PIN	P-68 (MO)	Condition	Function
Y4	Y4 (43) OUT- (33)	□□B□	Closed	Closed means target speed not reached
			Open	Open means reach output speed
		□□A□	Closed	Close means reach output speed
			Open	Open means target speed not reached
		□□3□ (default)		General purpose signal, function disabled.

7.3.3.8 Velocity Mode Control Type

In Velocity mode, there are two control types:

1. Position over time control type
2. Speed only control type

Both control type and parameters are different, it can be configured by SVX Servo Suite, or parameter P-15(JM)

Parameter Settings

Parameter	Name	Data Range	Default value	LED Display	Description
P-15 (JM)	Jog Mode velocity control mode type	1, 2	2	2	To set velocity mode control type: 1. Postion Over time control mode 2. Speed Only control mode

Setting Via Software

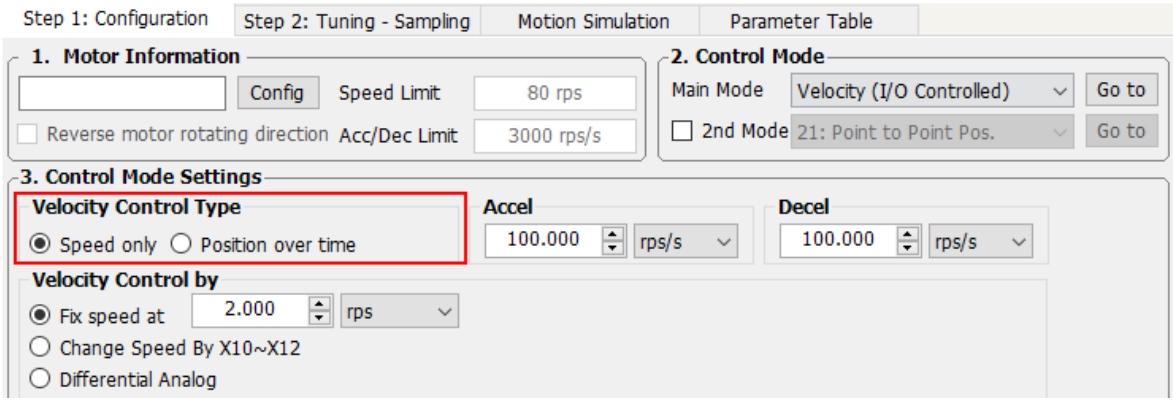

A. Position Over Time control mode

In Position Over Time control mode, velocity control will use position loop gain parameters for speed and position control, i.e., Proportional Gain (KF), Derivative Gain (KD), Damping Gain (KV), Integrator Gain (KI), Inertia Feedforward Constant (KK), Follow Factor (KL), Damping Filter (KE), PID Filter (KC). Servo Tuning is recommended.

Please Refer to Servo Tuning Gain for more details.

B. Speed Only control Mode

In Speed Only control mode, it is only using the PI velocity control loop, parameters are Velocity Loop Proportional Gain (VP), and Velocity Loop Integral Gain (VI).

Parameter	Name	Data Range	Default value	LED Display	Description
P-08 (VP)	Velocity Loop Proportional Gain	0~32767	15000	15000	To set velocity loop proportional gain in speed only control mode
P-09 (VI)	Velocity Loop Integral Gain	0~32767	1000	1000	To set velocity loop Integral gain in speed only control mode

7.3.3.9 Velocity ripple range

Parameter Setting

Parameter	Name	Data Range	Default value	Unit	LED Display	Description
P-85 (VR)	Ripple range setting for velocity reached	0~136	0.000	Rps	0	The acceptable velocity ripple value around the target velocity. If the difference between the actual velocity and targeted velocity is within the ripple value, the drive will then report that the actual velocity meets the target velocity value.

NOTE: When viewing or setting this value on drive's control panel, please refer to following calculation:

Velocity ripple range = LED display value x 240

Unit for Velocity ripple range is revolution per second (rps)

Setting Via Software

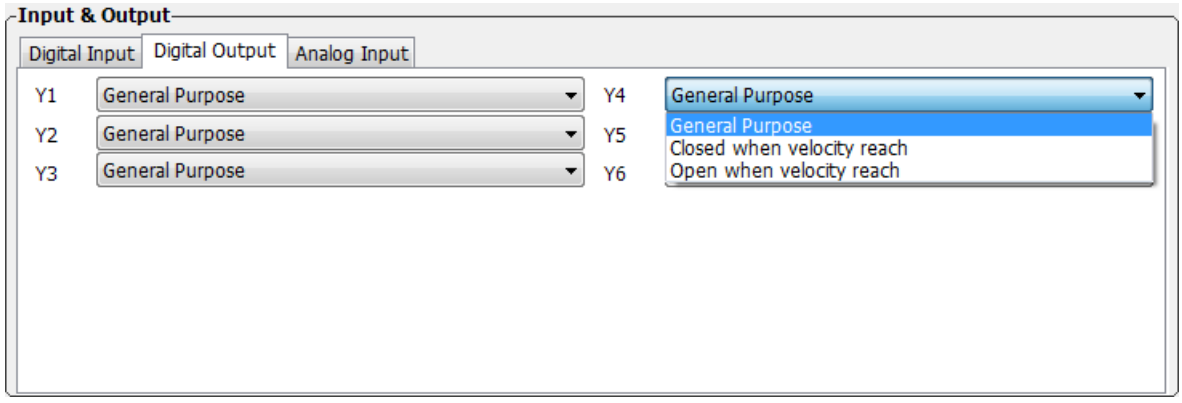

7.3.4 Analog Input Filter

When the analog input is used, there can be external signal interference that will affect the accuracy of the analog input voltage. In some cases this will cause the motor to turn unexpectedly, or cause unstable torque output. Therefore, use of the analog input filter is recommended. This filter is designed as a digital low pass filter; a proper filter frequency setting can significantly improve the motor performance.

To setup the analog input filter directly from the drive, please refer to the following calculation:

$$\text{Display analog input value} = = \frac{72090}{\frac{1400}{x} + 2.2}$$

Where X is input filter frequency, units are in Hz

Setting Via Software

In drive configuration page-------Input & Output; analog input 1 & 2 settings

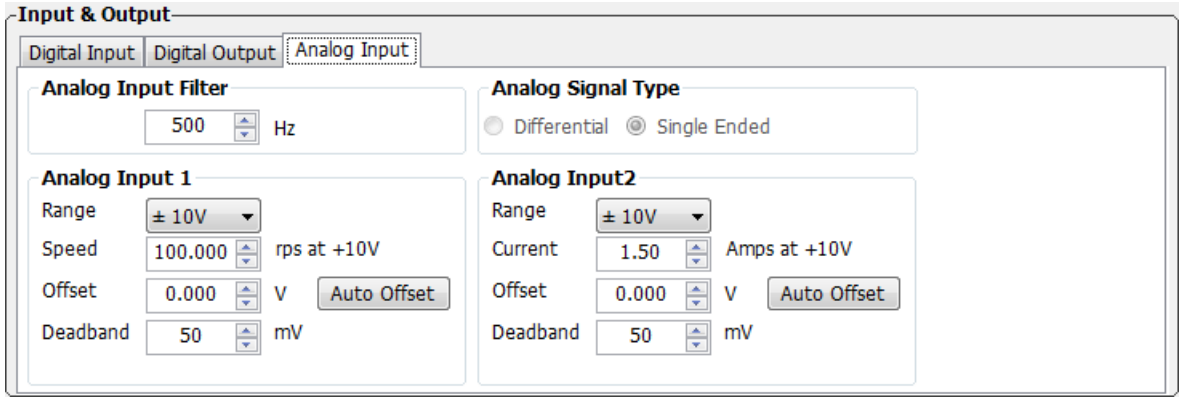

7.3.5 Software Configuration For Analog Velocity Mode

The SVX ServoSUITE® can help you easily configure the drive and motor and optimize the tuning parameters.

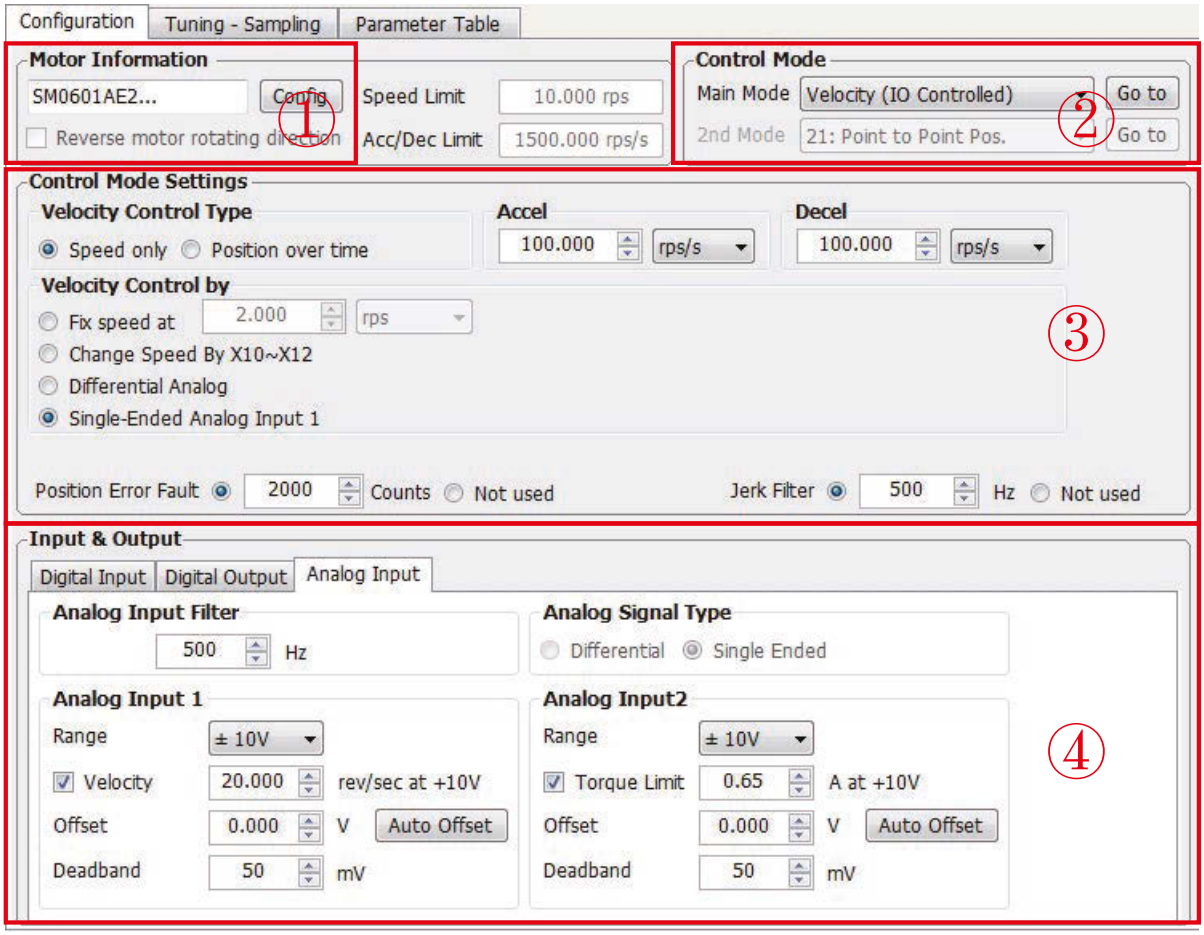

Step	Operation	Description
1st	Configure motor	choose your motor model. Refer to 2.3 motor number for details
2nd	Choose control mode	In control mode area, choose “velocity” for Velocity mode
3rd	Control mode configuration	choose specified velocity analog type, Refer to 7.3 analog velocity mode and 7.6 command velocity.
4th	Set analog signal	function, or digital input/output functions in Input/Output functions to setup. Refer to 4.8.3 CN2 connections, and 7.3 velocity mode and 7.1 general function settings.

7.4 Torque Mode

Torque mode is normally used for applications that require precise torque control. For SV200 series AC servo drives, they are 2 types of torque control: analog input torque mode and SCL command mode. For analog command mode, torque is controlled by external voltage input. SCL is a unique software command tool, designed by Applied Motion, which uses serial communication commands to control the motor.

Mode	Control Signal	P-12 (CM) Definition	Description
Analog input torque mode	+10~-10V Analog signal	2	Analog torque mode: No run/stop signal, No direction signal
Analog input torque mode	+10~-10V Analog signal	5	Analog torque mode: X1 for run/stop signal, No direction signal
Analog input torque mode	+10~-10V Analog signal	3	Analog torque mode: no run/stop signal; X2 is closed, motor will change its current rotary direction.
Analog input torque mode	+10~-10V Analog signal	4	Analog torque mode: no run/stop signal; X2 is open, motor will change its current rotary direction.
Analog input torque mode	+10~-10V Analog signal	6	Analog torque mode: X1 for run/stop signal; X2 is open, motor will change its current rotary direction.
Analog input torque mode	+10~-10V Analog signal	8	Analog torque mode: X1 for run/stop signal; X2 is close, motor will change its current rotary direction.
SCL torque control mode	SCL command	1	

7.4.1 Analog Torque Mode Connection Diagram

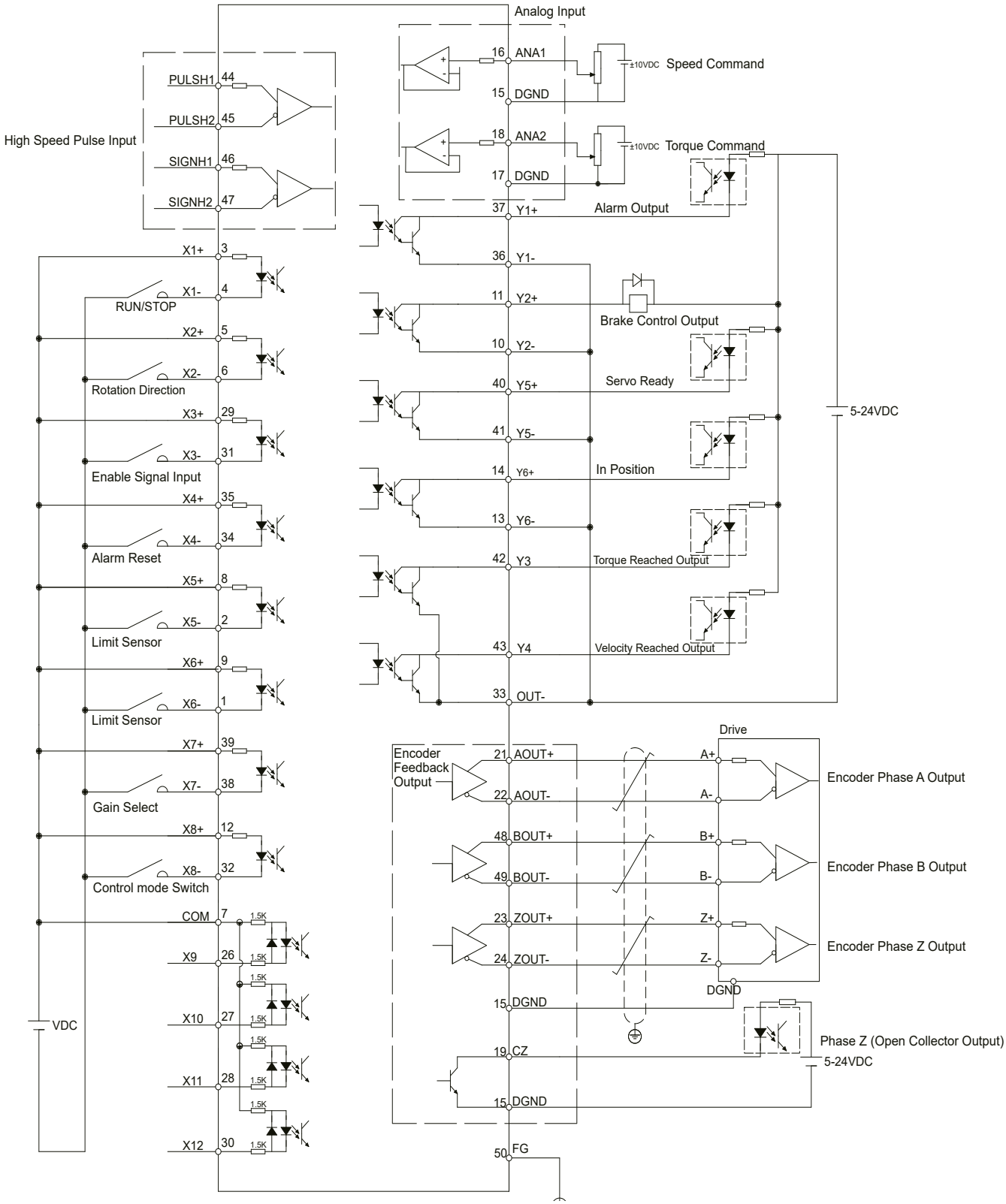

7.4.2 Parameters For Analog Torque Mode

SV200 series AC servo drives have two 12bit analog ADC converters. When single ended input signal is used, analog input 1 (ANA1) is used for velocity command, analog input 2 (ANA2) is used for rotating toque command. Differential input via ANA1/ANA2 is also available. In addition, low pass filter, offset and deadband can also be set to the drive.

Parameter	Name	Data Range	Default value	Unit	LED Display	Description
P-12 (CM)	Main control mode	1~8,10~18,21,22	7		7	Drive's main control mode selection
P-13 (CN)	Secondary control mode	1~8,10~18,21,22	21		21	Drive's secondary control mode selection
P-50 (AG)	Analog velocity setting	-100~100	20	Rps	4800	Motor rotating velocity when analog voltage is 10VDC
P-51 (AN)	Analog torque setting	-20~20	1	A	100	Motor rotating torque when analog voltage is 10VDC
P-52 (AV1)	Analog voltage offset 1	-10~10	0	V	0	Set analog voltage input 1 offset value
P-53 (AV2)	Analog voltage offset 2	-10~10	0	V	0	Set analog voltage input 2 offset value
P-54 (AV3)	Analog voltage offset (differential)	-10~10	0	V	0	Set analog differential voltage input offset value
P-55 (AS)	Analog input type	0~1	0		0	Set Analog input type
P-56 (AD1)	Analog deadband 1	0~255	0	mV	0	Set analog deadband offset 1 value
P-57 (AD2)	Analog deadband 2	0~255	0	mV	0	Set analog deadband offset 2 value
P-58 (AD3)	Analog deadband (differential)	0~255	0	mV	0	Set analog differential deadband offset value
P-59 (AF)	Analog input low pass filter	1~15990	500		14418	Analog input noise filter
P-60 (AT)	Analog trigger point	-10~10	0	V	0	
P-61 (FA1)	Define Analog value 1	1~3	3		□3	Set Analog input 1 function
P-61 (FA2)	Define Analog value 2	1~3	3		3□	Set Analog input 2 function

NOTE:This parameter unit in table above might be different from the LED display unit on the drive. Please refer to parameter 9 for details

7.4.3 Basic Settings For Analog Torque Mode

7.4.3.1 Command Signal For Analog Torque Mode

In Analog input torque mode, both single ended and differential signal are acceptable.

A. Single Ended Analog Input

Pin Type	Signal Name	Connector pin allocation	Function
Input	ANA2	18	Analog torque input signal
	DGND	17	Analog torque input signal grounding

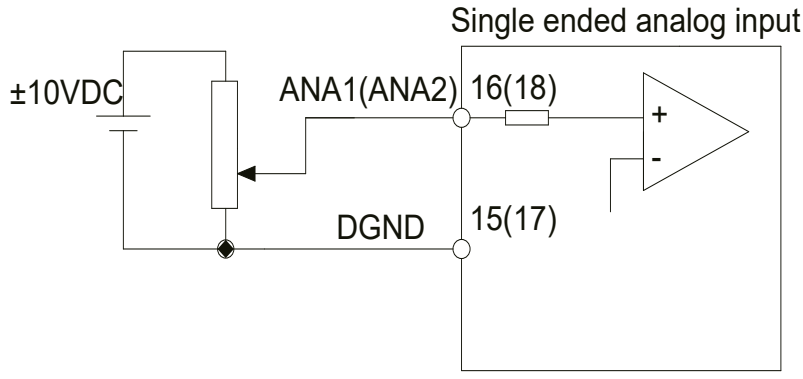

B. Differential Analog Input

Pin Type	Signal Name	Connector pin allocation	Function
Input	ANA1	16	Analog torque input for differential input signal
	ANA2	18	
	DGND	15	Analog torque input signal grounding

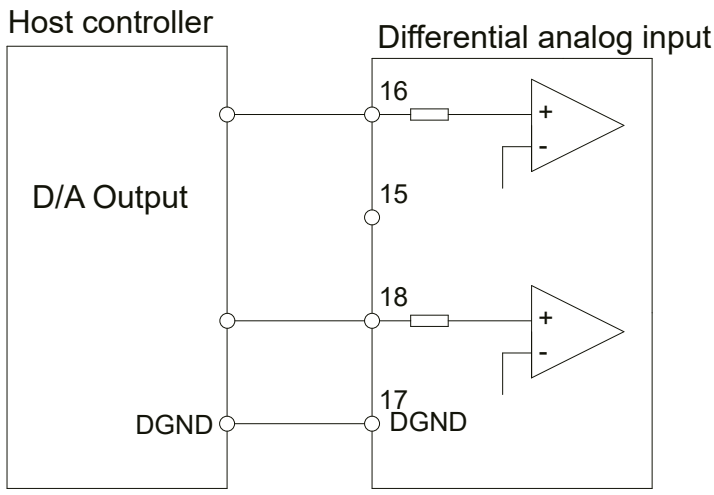

7.4.3.2 Analog Torque Gain

Analog input voltage range is between -10V~+10V. In analog torque mode, you must tell the drive how much current you want it to produce for a given analog input voltage. It can be configured via SVX ServoSUITE® software or parameter P-51 (AN) directly from the drive.

Parameter	Name	Data Range	Default value	Unit	Description
P-51 (AN)	Analog Torque Gain	-20~20	depend on current motor	A	Set the analog torque value corresponding to 10VDC.

NOTE: if you need to view or set this value on drive's control panel, please refer to following calculation:

Drive display value= ***a*** x 100

Where is target torque value unit ***a*** amps

Setting Via Software - in the example below, we've set the drive to produce 1.5A motor current with a 10V analog input

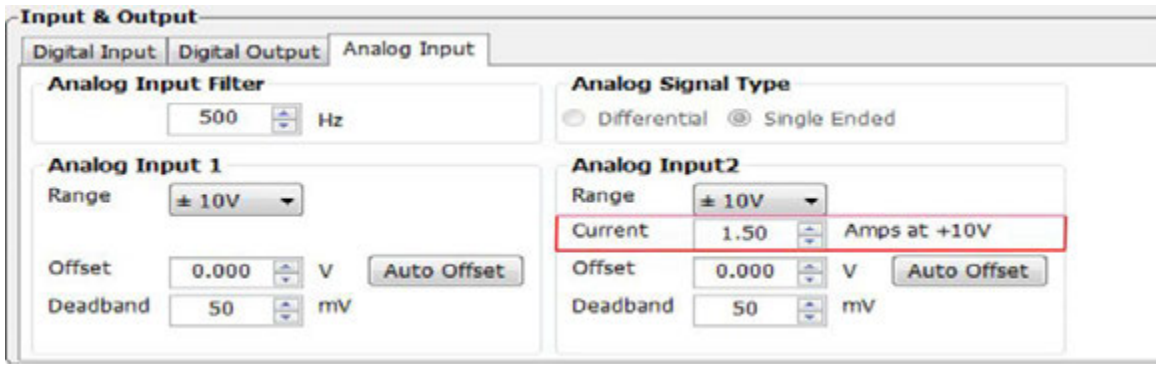

7.4.3.3 Analog Input Offset

In some cases, when a host controller sets the analog command to 0V, the servo motor might still rotate slowly. This is caused by voltage bias from the analog device. SVX ServoSUITE® can automatically offset the analog voltage bias, or customers can manually tune the offset by changing parameter P-53 (AV2).

Parameter	Name	Data Range	Default value	Unit	LED Display	Description
P-53 (AV2)	Analog input 2 offset	-10~10	0	V	0	Set Analog input 2 offset
P-54 (AV1)	Differential Analog offset	-10 - 10	0	V	0	Set differential analog input offset

NOTE: if you need to view or set the offset voltage value on drive's control panel, please refer to following calculation:

$$\text{Drive display value} = \underline{\boldsymbol{A}} \times 2730$$

Where $\underline{\boldsymbol{A}}$ is target setting offset, unit Volts (V)

Setting Via Software

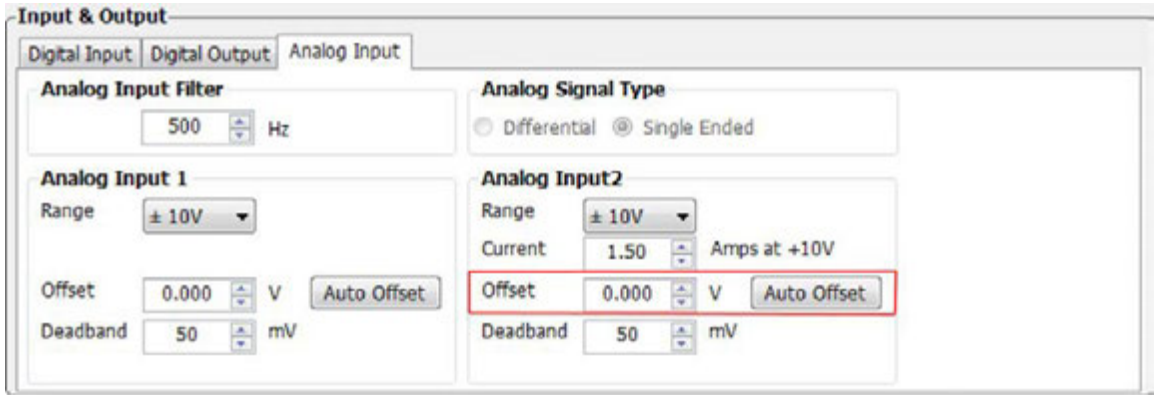

7.4.3.4 Analog Deadband

In analog control mode, even when the input voltage is 0V, it is impossible to ensure that the input voltage is absolutely zero due to external interference. In some cases, it might cause the motor to turn slowly in either direction. Therefore, it is highly necessary to setup a reasonable deadband value to prevent this issue.

It can be set by SVX ServoSUITE® software and P-57 (AD2) directly from the drive.

Parameter	Name	Data Range	Default value	Unit	LED Display	Description
P-57 (AD2)	Deadband for analog input 2	0~255	0	mV	0	Set deadband for analog input 2
P-58 (AD3)	Differential analog Deadband	0 - 255	0	mV	0	Set deadband for differential analog input

Setting Via Software

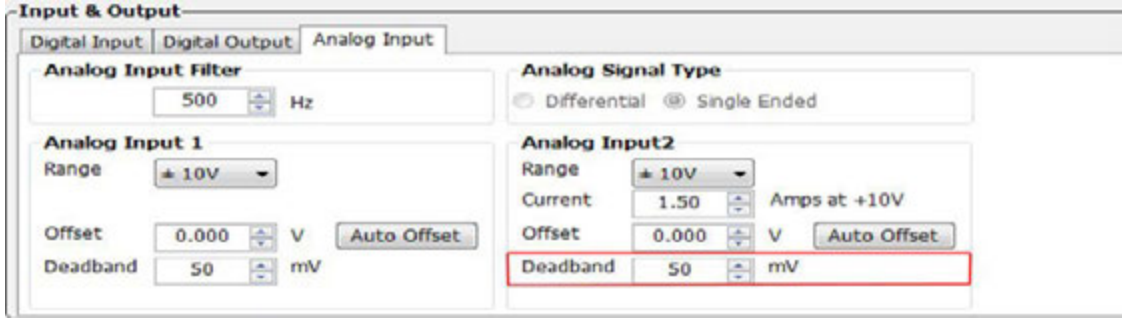

7.4.3.5 Run/Stop and Direction signal

In analog torque mode, external input X1 can be set as run/stop switch, X2 can be set as direction switch.

Signal Name	PIN	Condition	Function	Description
X1	X1+ (3)	Closed	Torque mode run/stop switch	When motor running, analog voltage defines motor output torque
	X1+ (4)	Open		In this mode, even with analog input, motor will not turn
X2	X2+ (5)	Closed	Torque mode direction switch	Change current motor rotary direction
	X2+ (5)	Open		Function not used

Setting Via Software

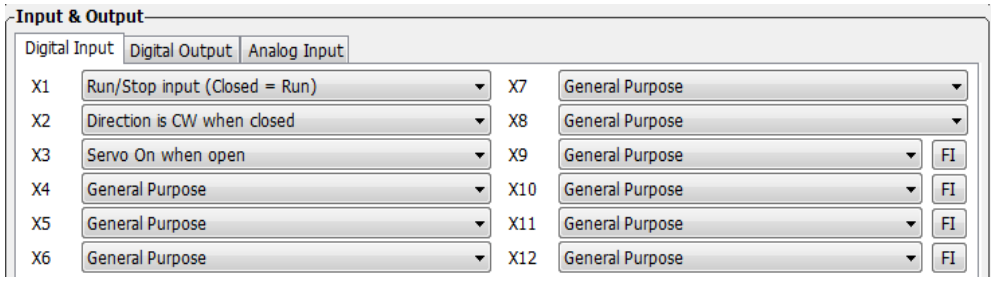

7.4.3.6 Velocity Limit

In analog torque mode, if no limit is set on motor's velocity, and the load inertia is small, the motor's velocity will be very fast, and it might cause damage to the machinery. Therefore, it is very important to set a velocity limit.

The velocity limit for torque mode can be set via analog input 1 (ANA1).

Parameters Setting

Parameter	Name	Data Range	Default value	Unit	LED Display	Description
P-55 (AS)	Analog type	0~1	0		0	analog input type: 0: single ended input 1:differential input
P-61 (FA1)	Analog 2 function setting	1~3	3		□3	analog input 1 function type: 1: velocity limit 3: not in use
P-50 (AG)	Analog Velocity Gain	-100~100	10	Rps	4800	Sets correspondent velocity value against 10VDC input voltage.

Setting Via Software

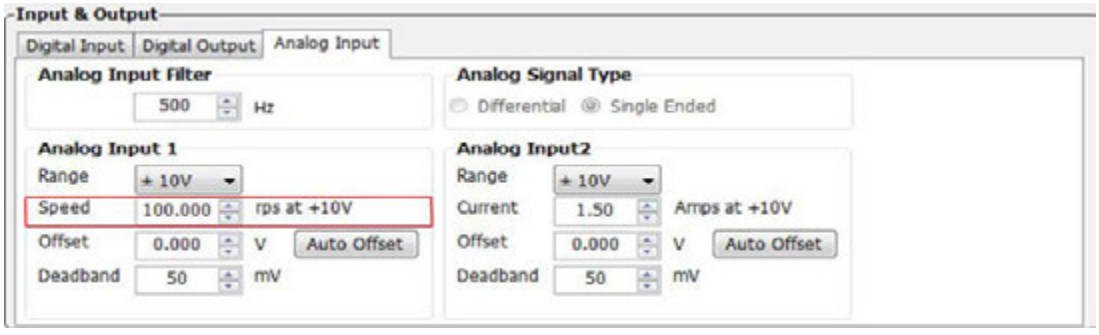

NOTE: if you need to view or set this value on the drive's control panel, refer to the following calculation:

LED display value = V X 100

V is speed setting, unit rps (rev/s)

7.4.3.7 Torque Reached

In torque mode, when the motor's actual torque and commanded torque are the same, a "torque reached" output signal can be sent via Y3 output.

The first digit (from right to left) of parameter P-68 (MO) from the drive defines the output signal Y3.

Signal Name	PIN	P-68 (MO)	Condition	Function
Y3	Y3 (42) OUT- (33)	□□□9	Closed	Closed means target torque not reached
			Open	Open means reach output torque
		□□□8	Closed	Close means reach output torque
			Open	Open means target torque not reached
		□□□3 (default)		General purpose signal, function disabled.

Parameters Setting

Parameter	Name	Data Range	Default value	Unit	LED Display	Description
P-87 (TV)	Torque within ripple range, when torque reach function in use.	0.00~3.00	0.00	A	0	When actual torque output and command torque are the same, and within the velocity ripple range. There will be torque reach output signal.

NOTE: if you need to view or set this value on drive's control panel P-86 (TV), please refer to following calculation:

LED display value = Torque ripple range X 100

Unit for torque ripple range is A (amps)

Setting Via Software

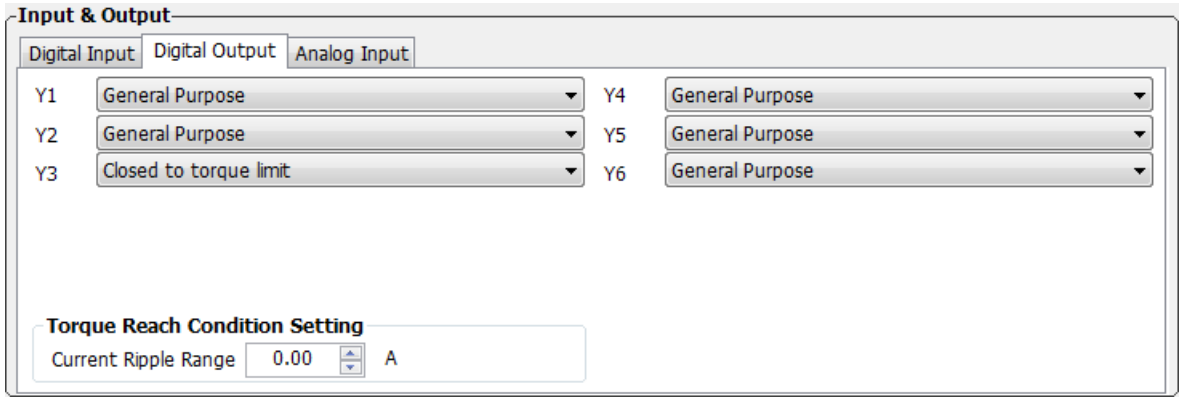

7.4.4 Software Configuration For Analog Torque Mode

The SVX ServoSUITE® can help you easily configure the drive and motor, and set the tuning parameters.

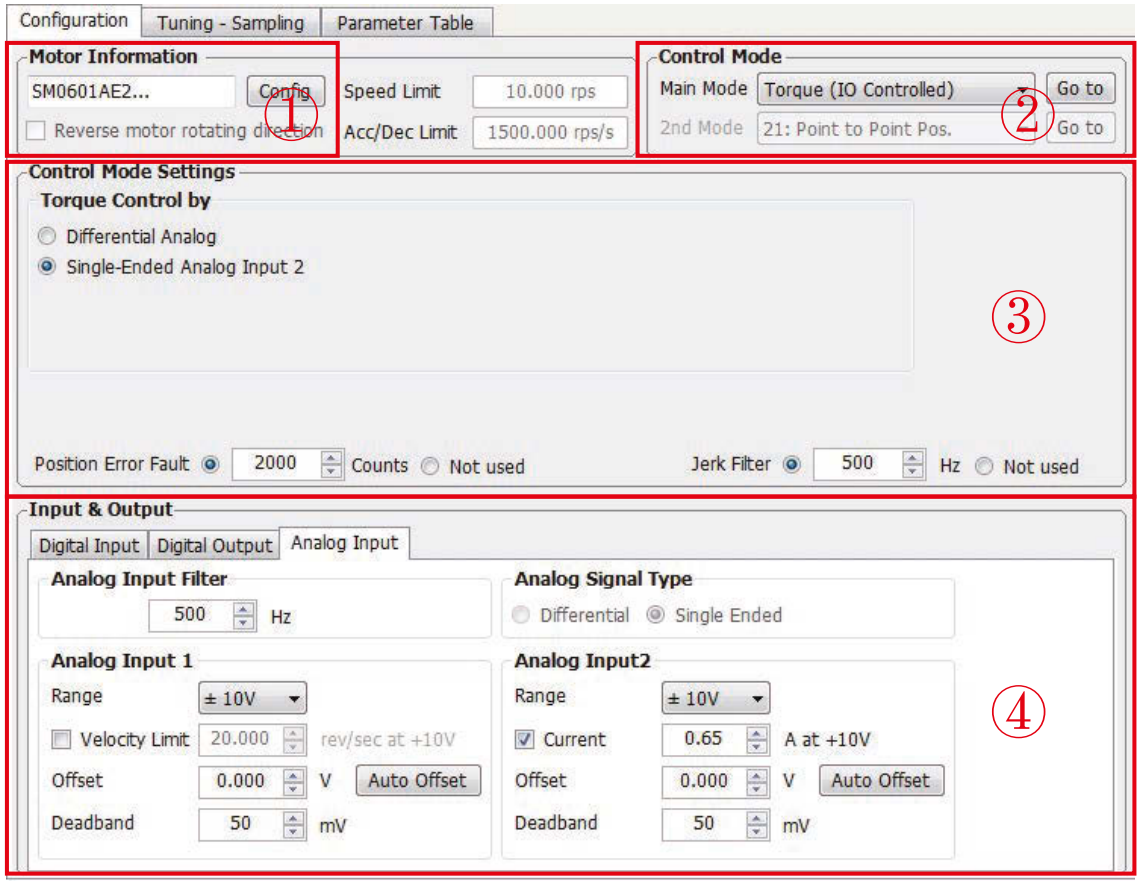

Step	Operation	Description
1st	Configure motor	Choose your motor number. Please refer to 2.3 Motor number for details.
2nd	Choose control mode	In control mode, choose “torque” for torque mode.
3rd	Control mode configuration	Choose specified torque analog type, please refer to 7.4 Analog torque mode.
4th	Set analog signal function, or digital input/output functions	In Input/Output functions to setup. Please refer to 4.8.3 CN2 connections, and 7.4 torque mode and 7.1 general function settings.

8 Parameters and Functions

8.1 Parameter Category

SV200 servo drives have four display modes.

type	Function	Example	Details
n---status monitoring setting	Select LED monitoring status type		5.4 status monitoring selection mode
F---Function mode setting	Select drive function to execute		5.5 function mode control
P---Parameter setting mode	Selection and editing the parameter on the drive		5.6 parameter setting mode
r---warning&fault display	Display the warning or fault message When they occur		5.8 warning and fault display

8.2 Parameter List

parameter number	Type	SCL command	LED display	Function	Default value	Unit	LED Display
P00	PID	KP		Global gain 1	8000		8000
P01	PID	KG		Global gain 2	12000		12000
P02	PID	KF		Proportional gain	10000		10000
P03	PID	KD		Deriv gain	2000		2000
P04	PID	KV		Damping gain	8000		8000
P05	PID	KI		Integrator gain	150		150
P06	PID	KK		Inertia Feedforward Constant	500		500
P07	PID	KJ		Jerk Filter Frequency	5000		5000
P08	PID	VP		Velocity Loop Proportional Gain	15000		15000
P09	PID	VI		Velocity Loop Integral Gain	600		600
P10	PID	KE		Deriv Filter factor	15000		15000
P11	PID	KC		PID Filter factor	25000		25000
P12	Control mode	CM		Main control mode	7		7
P13	Control mode	CN		Secondary control mode	21		21
P14	Control mode	PM		Power-up mode	2		2
P15	Control mode	JM		Jog mode	2		2
P16	Current config	GC		Current Command of Torque Mode	0	0.01A	0
P17	Current config	CC		Rated Maximum current	0.5 *	A	50

P18	Current config	CP		Peak current	1.5 *	A	150
P19	Current config	HC		Hard Stop Homing Current	1	A	100
P20	Profile	VM		Maximum velocity	800	rps	19200
P21	Profile	AM		Maximum acceleration/ deceleration	3000	rps/s	18000
P22	Profile	JS	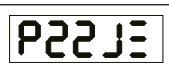	Jog speed	10.000	rps	2400
P23	Profile	JA	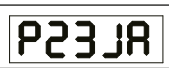	Jog acceleration	100.00	rps/s	600
P24	Profile	JL		Jog deceleration	100	rps/s	600
P25	Profile	VE		Point to point Velocity	5	rps	1200
P26	Profile	AC		Point to point acceleration	100.00	rps/s	600
P27	Profile	DE		Point to point deceleration	100.00	rps/s	600
P28	Profile	VC		Point to point secondary velocity	2.000	rps	480
P29	Profile	JC1		Jog mode speed 1	2.000	rps	480
P30	Profile	JC2		Jog mode speed 2	10.000	rps	2400
P31	Profile	JC3		Jog mode speed 3	20.000	rps	4800
P32	Profile	JC4		Jog mode speed 4	25.000	rps	6000
P33	Profile	JC5		Jog mode speed 5	30.000	rps	7200
P34	Profile	JC6		Jog mode speed 6	35.000	rps	8400
P35	Profile	JC7		Jog mode speed 7	40.000	rps	9600
P36	Profile	JC8		Jog mode speed 8	50.000	rps	12000
P37	Config	ER		Encoder resolution	10000	counts/rev	1250
P39	Config	EG		Electronic gearing	10000	counts/ rev	5000
P40	Config	PV		Secondary Electronic gearing	10000	counts/ rev	10000
P41	Config	EN		Numerator of electronic gearing ratio	1000		1000
P42	Config	EU		Denominator of electronic gearing ratio	1000		1000
P43	Config	SZ		Input Pulse Setting	1792		1792
P44	Config	PF		Position Fault limit	2000	counts	2000
P45	Config	PL		Dynamic Position error Range	10	counts	10
P46	Config	PD		In Position Error Range	10	counts	10

P47	Config	PE		In position duration count	10	counts	10
P48	Config	TT		Pulses Input Completion count	2	ms	2
P49	Analog	AP		Analog Position Gain	8000	counts	8000
P50	Analog	AG		Analog Velocity Gain	20.000	rps	4800
P51	Analog	AN		Analog Torque Gain	0.50	A	50
P52	Analog	AV1		Analog input1 offset	0.000	V	0.000
P53	Analog	AV2		Analog input2 offset	0.000	V	0.000
P54	Analog	AV3		Differential analog input offset	0.000	V	0.000
P55	Analog	AS		Analog type	0		0
P56	Analog	AD1		Analog input1 deadband	0	mv	0
P57	Analog	AD2		Analog input2 deadband	0	mv	0
P58	Analog	AD3		Differential analog deadband	0	mv	0
P59	Analog	AF		Analog input low pass filter value	500	Hz	14418
P60	Analog	AT		Analog threshold	0.000	V	0.000
P61	Analog	FA		Analog 1/2 function	33		33
P62	I/O	SI		Servo enable input setting	2		2
P63	I/O	AI		Alarm Reset input setting	1		1
P64	I/O	DL		End-of –travel limit Setting	3		3
P65	I/O	MI		X7, X8, X9, X10 input function setting	3333		3333
P66	I/O	AO		Alarm output function setting	1		1
P67	I/O	BO		Motor brake control setting	1		1
P68	I/O	MO		Y3, Y4, Y5, Y6 output function setting	413D		413D
P69	I/O	BD		Brake disengage Delay	200	ms	200
P70	I/O	BE		Brake engage delay	200	ms	200
P71	I/O	FI1		Input X9 noise filter	0		0
P72	I/O	FI2		Input X10 noise filter	0		0
P73	I/O	FI3		Input X11 noise filter	0		
P74	I/O	FI4		Input X12 noise filter	0		
P76	communication	PR		Communication protocol	15		

P77	communication	TD		Transmit delay	2		2
P78	communication	BR		Baud rate	1		1
P79	communication	DA		RS-485 Address	32		0
P80	communication	CO		CANopen Node ID or IP address Index selection	1		1
P81	communication	CB		CANopen Baudrate	0		0
P82	Regeneration	ZR		Regen resistor value	40	Ω	200
P83	Regeneration	ZC		Regen resistor continuous wattage	200	w	40
P84	Regeneration	ZT		Regen resistor peak time	125.00	ms	5000
P85	Other	VR		Ripple range setting for velocity reach	0.000	rps	0
P86	Other	TO		Tach out counts	0		0
P87	Other	TV		Ripple range setting for torque reach	0.00	A	0
P88	Other	PK		Parameter lock on the drive's control panel	0		0
P89	Other	DD		LED Default status monitor type	0		
P90	Other	MA		LED Warning Display Mask Code	65535		-1
P91	Other	HA1		Accel of seeking end-of-travel limit during homing	100	rps/s	600
P92	Other	HA2		Accel of seeking homing switch during homing	100	rps/s	600
P93	Other	HA3		Accel of feeding to homing switch during homing	10	rps/s	60
P94	Other	HO1		Decel of seeking end-of-travel limit during homing	100	rps/s	600
P95	Other	HO2		Decel of seeking homing switch during homing	100	rps/s	600
P96	Other	HO3		Decel of feeding to homing switch during homing	10	rps/s	60
P97	Other	HV1		Velocity of seeking end-of-travel limit during homing	10	rps	2400
P98	Other	HV2		Velocity of seeking homing switch during homing	5	rps	1200
P99	Other	HV3		Velocity of feeding to homing switch during homing	0.5	rps	120
P100	Other	KL		Follow factor	0		0
P101	Other			Select Motor Rotation Direction	0		0

* : This parameter depends on motor models.

8.3 Parameter Description

P-00 (KP)	Global gain 1	Data Range	Default	Unit	LED Display
		0~32767	10000	------	8000

Sets or requests the servo control proportional gain term. Gain value is relative: “0” meaning no gain, “32767” meaning full gain. This parameter is the primary gain term for minimizing the position error. Larger KP value means higher stiffness, and fast response. However, if gain value is too high, it will lead to vibration.

Use input X7 for global gain selection. When gain selection function is used, it helps the servo drive to run the motor with least time delay and as close as possible to the host command requirement. Especially in the cases, when load characteristic changes significantly, change of gain value will reduce motor’s settling time, motor vibration and so on. It will highly optimize motor’s overall performance. The two global gain parameters are: P-00 (KP), and P-01 (KG).

P-01 (KG)	Global gain 2	Data Range	Default	Unit	LED Display
		0~32767	12000	------	12000

Sets or requests the secondary servo control proportional gain term. Gain value is relative: “0” meaning no gain, “32767” meaning full gain. This parameter is the primary gain term for minimizing the position error. Larger KP value means higher stiffness, and fast response. However, if gain value is too high, it will lead to vibration.

P-02 (KF)	Proportion gain	Data Range	Default	Unit	LED Display
		0~32767	10000	------	10000

The servo control proportional gain term. Gain value is relative: “0”meaning no gain, “32767” meaning full gain. This parameter is the primary gain term for minimizing the position error. Increase of KF will increase stiffness and reduce in position time duration. However, it might cause vibration if gain is too large.

P-03 (KD)	Deriv gain	Data Range	Default	Unit	LED Display
		0~32767	3000	------	2000

The servo control differential gain. Gain value is relative: “0” meaning no gain, “32767” meaning full gain. It works to damp low speed oscillations.

P-04 (KV)	Damping gain	Data Range	Default	Unit	LED Display
		0~32767	10000	------	8000

The servo control Proportional gain term of the velocity error. Gain value is relative: 0 = no gain, 32767 = full gain. KV minimizes the velocity error, and vibration in position control mode.

P-05 (KI)	Integrator gain	Data Range	Default	Unit	LED Display
		0~32767	500	------	150

The servo control integrator gain term. Gain value is relative: “0” meaning no gain, “32767”meaning full gain. It minimizes (or may even eliminate) position errors especially when holding position.

P-06 (KK)	Inertia Feedforward Constant	Data Range	Default	Unit	LED Display
		0~32767	800	------	500

The servo control inertia feed forward gain. Gain value is relative: “0” meaning no gain, “32767”meaning full gain. KK improves acceleration control by compensating for the load inertia.

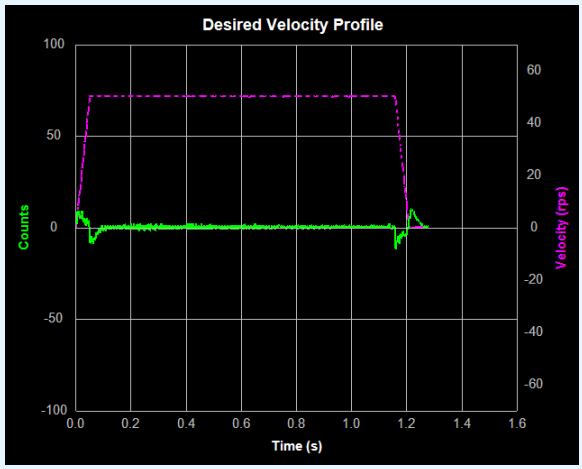

Without KK parameter, Inertia Feedforward Constant.
Red Line (Dash) : Actual velocity
Green Line (solid) : Position error

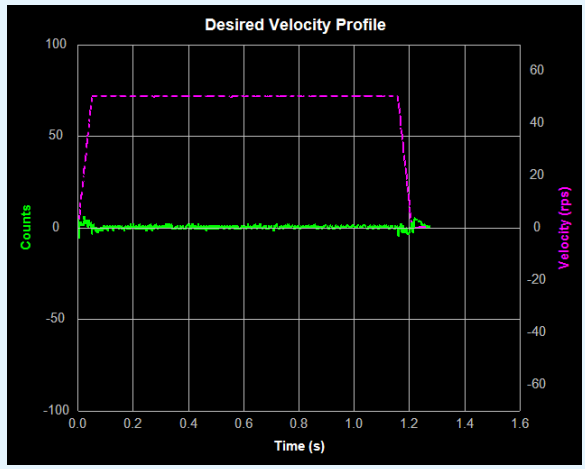

With KK parameter, Inertia Feedforward Constant.
Red Line (Dash) : Actual velocity
Green Line (solid) : Position error

P-07 (KJ)	Jerk Filter Frequency	Data Range	Default	Unit	LED Display
		0~5000	5000	------	5000

This parameter sets the Jerk Filter frequency in Hz . The lower the frequency value the more pronounced the S-curve profile will be. Setting the value to 0 will disable the filter.

S-curve acceleration/deceleration ramps are beneficial in positioning systems where instantaneous changes in speed may cause the load to jerk excessively. One example is when the load is connected to the motion actuator via a long moment arm. If the arm is not sufficiently rigid, changes in speed at the actuator can result in undesirable oscillations and increased settling time at the load. Smoothed transitions in speed changes, can alleviate this unwanted motion and reduce settling time.

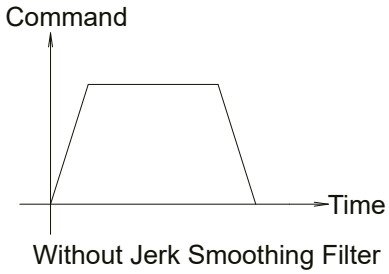

Without Jerk Smoothing Filter

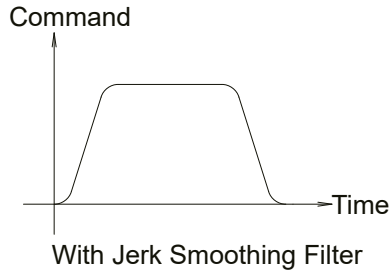

With Jerk Smoothing Filter

P-08 (VP)	Velocity Loop Proportional Gain	Data Range	Default	Unit	LED Display
		0~32767	15000	------	15000

The velocity-mode servo control Proportional gain term. Gain value is relative: 0 = no gain, 32767 = full gain. VP minimizes velocity error when in velocity mode 2 (JM2).

P-09 (VI)	Velocity Loop Integral Gain	Data Range	Default	Unit	LED Display
		0~32767	1000	------	600

The velocity-mode (JM2) servo control integrator gain term. Gain value is relative: 0 = no gain, 32767 = full gain. VI minimizes steady state velocity errors.

P-10 (KE)	Deriv Filter factor	Data Range	Default	Unit	LED Display
		0~32767	15000	------	15000

The differential control parameters filter frequency. The filter is a simple one-pole, low-pass filter intended for attenuating high frequency oscillations. The value is a constant that must be calculated from the desired roll off frequency.

P-11 (KC)	PID Filter factor	Data Range	Default	Unit	LED Display
		0~32767	25000	------	20000

The servo control overall filter frequency. The filter is a simple one-pole, low-pass filter intended for attenuating high frequency oscillations. The value is a constant that must be calculated from the desired roll off frequency.

P-12 (CM)	Main control mode	Data Range	Default	Unit	LED Display
		1~8, 10~18, 21, 22, 25	7	------	7

Parameter P-12 (CM) is used to set drive's control mode.

Parameter mode list are as follows:

Mode	Control Signal	P-12 (CM)	Description
SCL torque mode	SCL command	1	Use SCL command to control motor's output torque
Analog input torque mode	+10~-10V Analog signal	2	Use external analog voltage input signal to control motor's output torque. Analog torque mode: No run/stop signal, No direction signal.
Analog input torque mode	+10~-10V Analog signal	3	Analog torque mode: no run/stop signal; X2 is closed, motor will change its current rotary direction.
Analog input torque mode	+10~-10V Analog signal	4	Analog torque mode: no run/stop signal; X2 is open, motor will change its current rotary direction.
Analog input torque mode	+10~-10V Analog signal	5	Analog torque mode: X1 for run/stop signal, No direction signal.
Analog input torque mode	+10~-10V Analog signal	6	Analog torque mode: X1 for run/stop signal; X2 is open, motor will change its current rotary direction.
Analog input torque mode	+10~-10V Analog signal	8	Analog torque mode: X1 for run/stop signal; X2 is close, motor will change its current rotary direction.
Digital pulse position mode	STEP & Direction; CW/CCW Pulse; A/B Quadrature.	7	Up to 500KHz open collector input signal or up to 2MHz differential input signal.
Command velocity mode	SCL command	10	Use SCL command to control motor rotation velocity.
Analog velocity mode	+10~-10V Analog signal	11	Using external analog voltage input to motor velocity. Analog velocity mode, NO run/stop signal, X2 is direction switch.
Analog velocity mode	+10~-10V Analog signal	12	Analog velocity mode, X1 is run/stop signal, X2 is direction switch
Velocity mode	Digitial input signal	15	Profile velocity mode, after drive is enabled. The drive will run at velocity set by P-21 (JS). NO run/stop signal, X2 is direction switch.
Velocity mode	Digitial input signal	16	Profile velocity mode, after drive is enabled. The drive will run at velocity set by P-21 (JS). NO run/stop signal, X2 is direction switch.
Multi velocity mode	Digitial input signal	17	Profile velocity mode, NO run/stop signal. X2 is direction switch. X10, X11, X12 is speed selection switch.
Multi velocity mode	Digitial input signal	18	Profile velocity mode, X1 is run/stop switch. X2 is direction switch. X10, X11, X12 is speed selection switch.
Point to point positioning	SCL command	21	Use SCL command to control point to point position mode.
Analog position mode	+10~-10V Analog signal	22	Use analog input voltage signal for position control .
Position table	Internal position mode	25	2 control mode types: linear motion with maximum of 64 position set points, and rotary motion with maximum of 48 position division points. Available on -P models only.

P-13 (CN)	Secondary control mode	Data Range	Default	Unit	LED Display
		1~8, 10~18, 21, 22, 25	21	------	21

Servo drive's secondary control mode. Please refer to P-12 (CM) main control mode, and 7.1.5 control mode selection.

P-14 (PM)	Power-up mode	Data Range	Default	Unit	LED Display
		2, 5, 7	2	------	2

The power-up mode of the drive. PM determines how the drive is configured for serial communications at power-up. For example, for SCL applications set PM=2 or PM=5. The power-up mode is also set when configuring the drive with SVX ServoSUITE®. PM2 (Q / SCL) is the same as PM7 (Q Program Mode), except the program is not automatically executed at power up.

P-15 (JM)	Jog mode	Data Range	Default	Unit	LED Display
		1, 2	2	-----	2

There are two Jog modes available:

JM 1: Jog Mode 1 uses position control that moves the target position which causes the motor to move at the set velocity. Jog Mode 1 will cause the servo motor to always move the same distance over time. A drawback is that the servo can fault if the position error during the move exceeds the value set by the PF (Position Fault) command.

JM 2: uses velocity control that applies torque to the motor to maintain velocity. This method functions better with high inertia loads because it ignores the value set by the PF (Position Fault) command. It also allows the drive to function in a "torque-limited velocity" mode or a "velocity-limited torque" mode. Jog Mode 2 also uses a different set of control parameters, VI and VP, for "tuning" the velocity mode.

P-16 (GC)	Current Command of Torque Mode	Data Range	Default	Unit	LED Display
		Based on drive's output ability	0	0.01A	0

The immediate current for the servo motor and drive when the servo drive is set for Command Torque Mode.

NOTE: if you need to view or set this value on drive's control panel P-16 (GC), please refer to following calculation:

LED display value = ***B*** x 100

Where ***B*** is target setting current, Unit for is A (amps)

P-17 (CC)	Rated Maximum current	Data Range	Default	Unit	LED Display
		Depends on motor model	0.5	A	50

The continuous (RMS) current setting of the servo drive.

NOTE: In normal operation, please DO NOT change this parameter.

NOTE: if you need to view or set this value on drive's control panel P-16 (CC), please refer to following calculation:

LED display value = ***B*** x 100

Where ***B*** is target setting current, Unit for is A (amps)

P-18 (CP)	Peak current	Data Range	Default	Unit	LED Display
		Depends on motor model	1.5	A	150

CP sets the peak (RMS) current setting of the servo drive. Peak current sets the maximum current that should be used with a given motor. When the motor position requires more than the continuous value, the peak current time calculation is done using i^2t which integrates current values for more accurate modeling of drive and motor heating. The servo drive will allow peak current for up to one second. After one second of operation at peak current the current is reduced to the continuous current setting (see CC command).

NOTE: In normal operation, please DO NOT change this parameter.

NOTE: if you need to view or set this value on drive's control panel P-18(CP), please refer to following calculation:

LED display value = ***B*** x 100

Where ***B*** is target setting current, Unit for is A (amps)

P-20 (VM)	Maximum velocity	Data Range	Default	Unit	LED Display
		0.025~100	80	rps	19200

The maximum motor velocity in rev/sec. Used in all control modes to limit the maximum speed of the drive.

NOTE: if you need to view or set this value on drive's control panel P-20 (VM), please refer to following calculation:

LED display value = ***V*** x 240

Where ***V*** is target velocity setting, Unit is rps (rev/sec).

P-21 (AM)	maximum acceleration/deceleration	Data Range	Default	Unit	LED Display
		0.167~5000	3000	rps/s	18000

The maximum acceleration/deceleration allowed. When the targeted acceleration/deceleration excels the maximum value, the actual acceleration/deceleration will limit to the maximum value.

Also sets the deceleration rate used when an end-of-travel limit is activated during a move or when an ST (Stop) or SK (Stop & Kill) command is sent.

NOTE: if you need to view or set this value on drive's control panel P-21 (AM), please refer to following calculation:

LED display value = ***B*** x 6

Where ***B*** is target maximum acceleration/deceleration setting, Unit is rps/s .

P-22 (JS)	Jog velocity	Data Range	Default	Unit	LED Display
		0.025~100	10	rps	2400

The speed for Jog moves in rev/sec.

NOTE:If you need to view or set this value on drive's control panel P-22 (JS), please refer to following calculation:

LED display value = ***V*** x 240

Where = ***V*** is target velocity setting, Unit is rps (rev/sec) .

P-23 (JA)	Jog acceleration	Data Range	Default	Unit	LED Display
		0.167~5000	100	rps/s	600

The accel/decel rate for Jog moves and velocity control mode in rev/sec/sec. Setting JA overwrites the both the last JA and JL values. This means that to have different jog accel and jog decel values, you should first send JA to set the jog accel and then send JL to set the jog decel.

NOTE: if you need to view or set this value on drive's control panel P-23 (JA), please refer to following calculation:

LED display value = ***B*** x 6

Where ***B*** is jog acceleration/deceleration setting, Unit is rps/s .

P-24 (JL)	Jog deceleration	Data Range	Default	Unit	LED Display
		0.167~5000	100	rps/s	600

The accel/decel rate for Jog moves and velocity control mode in rev/sec/sec. Setting JA overwrites the both the last JA and JL values. This means that to have different jog accel and jog decel values, you should first send JA to set the jog accel and then send JL to set the jog decel.

NOTE: if you need to view or set this value on drive's control panel P-23 (JA), please refer to following calculation:

LED display value = ***B*** x 6

Where ***B*** is jog acceleration/deceleration setting, Unit is rps/s .

P-25 (VE)	Point to point Velocity	Data Range	Default	Unit	LED Display
		0.025~100	10	rps	1200

The shaft speed for point-to-point move commands like FL, FP, FS, FD, SH, etc.

NOTE: if you need to view or set this value on drive's control panel P-25 (VE), please refer to following calculation:

LED display value = ***V*** x 240

Where = ***V*** is target velocity setting, Unit is rps (rev/sec) .

P-26 (AC)	Point to point acceleration	Data Range	Default value	Unit	LED Display
		0.167~5000	100	rps/s	600

The acceleration rate used in point-to-point move commands in rev/sec/sec.

NOTE: if you need to view or set this value on drive's control panel P-26 (AC), please refer to following calculation:

LED display value = ***B*** x 6

Where ***B*** is point to point move acceleration setting, Unit is rps/s .

P-27 (DE)	Point to point deceleration	Data Range	Default	Unit	LED Display
		0.167~5000	100	rps/s	600

The deceleration rate used in point-to-point move commands in rev/sec/sec.

NOTE: if you need to view or set this value on drive's control panel P-27 (DE), please refer to following calculation:

LED display value = ***B*** x 6

Where ***B*** is point to point move deceleration setting, Unit is rps/s .

P-28 (VC)	speed change	Data Range	Default	Unit	LED Display
		0.025~100	2	rps	480

The secondary speed for FC and FD moves.

NOTE: if you need to view or set this value on drive's control panel P-28 (VC), please refer to following calculation:

LED display value = ***V*** x 240

Where = ***V*** is target velocity setting, Unit is rps (rev/sec) .

P-29 (JC)	Jog mode speed 1	Data Range	Default	Unit	LED Display
		0.025~100	2	rps	480

The first speed used in velocity mode. This only applies to control modes 15, 16, 17, and 18.

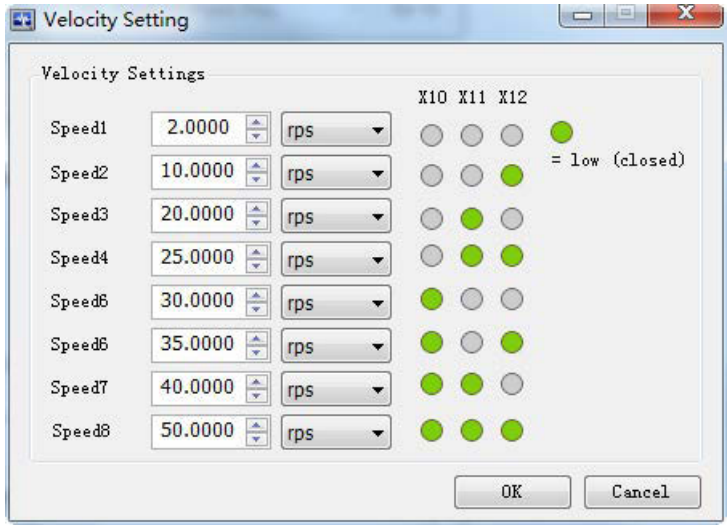

P-30 (JC)	Jog mode speed 2	Data Range	Default	Unit	LED Display
		0.025~100	10	rps	2400

The second speed used in velocity mode. This only applies to control modes 13, 14, 17, and 18.

P-31 (JC)	Jog mode speed 3	Data Range	Default	Unit	LED Display
		0.025~100	20	rps	4800

The third speed used in velocity mode. This only applies to control modes 13, 14, 17, and 18.

P-32 (JC)	Jog mode speed 4	Data Range	Default	Unit	LED Display
		0.025~100	25	rps	6000

The fourth speed used in velocity mode. This only applies to control modes 13, 14, 17, and 18.

P-33 (JC)	Jog mode speed 5	Data Range	Default	Unit	LED Display
		0.025~100	30	rps	7200

The fifth speed used in velocity mode. This only applies to control modes 13, 14, 17, and 18.

P-34 (JC)	Jog mode speed 6	Data Range	Default	Unit	LED Display
		0.025~100	35	rps	8400

The sixth speed used in velocity mode. This only applies to control modes 13, 14, 17, and 18.

P-35 (JC)	Jog mode speed 7	Data Range	Default	Unit	LED Display
		0.025~100	40	rps	9600

The seventh speed used in velocity mode. This only applies to control modes 13, 14, 17, and 18.

P-36 (JC)	Jog mode speed 8	Data Range	Default	Unit	LED Display
		0.025~100	50	rps	12000

The eighth speed used in velocity mode. This only applies to control modes 13, 14, 17, and 18.

P-37 (ER)	Encoder resolution	Data Range	Default	Unit	LED Display
		200~12800	2500	counts	1250

Sets the encoder resolution in quadrature counts. For example, if the motor connected to the drive has an 10000count (2500 line) per revolution encoder, set the encoder resolution to 8000.

NOTE: for AMP motor please DONOT change this parameter

NOTE: if you need to view or set this value on the drive's control panel, refer to the following calculation:

LED display value = V x 6

Where **V** number of Encoder lines

P-39 (EG)	Electronic gearing	Data Range	Default	Unit	LED Display
		200~32000	10000	counts	5000

EG defines the pulses per revolution for electronic gearing. For example, with an EG value of 10000 the servo drive will require 10000 pulses from the master pulse source to move the servo motor 1 revolution.

NOTE: if you need to view or set this value on the drive's control panel, refer to the following calculation:

LED display value = EG / 2

Where **EG** is electronic gearing ratios, units counts.

P-40 (PV)	Secondary Electronic gearing	Data Range	Default	Unit	LED Display
		200~32000	10000	counts	10000

PV defines the pulses per revolution for secondary electronic gearing. Please refer to 7.2.3 control pulse dividing switch function

P-41 (EN)	Numerator of electronic gearing ratio	Data Range	Default	Unit	LED Display
		1~1000	1000		1000

Defines the numerator of electronic gearing ratio.

NOTE:

1. For firmware 1.00K or lower, if you need to view or set this value on the drive's control panel, refer to the following calculation:

LED display value = V x 32

Where **V** is electronic gearing ratios, units counts.

2. For Firmware 1.00L or above, no calculation is needed

Please refer to 7.2.5 Electronic gearing ratio

P-42 (EU)	Denominator of electronic gearing ratio	Data Range	Default	Unit	LED Display
		1~1000	1000		1000

Defines the denominator of electronic gearing ratio. Please refer to 7.2.5 Electronic gearing ratio

NOTE:

1. For firmware 1.00K or lower, if you need to view or set this value on the drive's control panel, refer to the following calculation:

LED display value = V x 32

Where **V** is electronic gearing ratios, units counts.

2. For Firmware 1.00L or above, no calculation is needed

P-43 (SZ)	Input Pulse Setting	Data Range	Default	Unit	LED Display
		0~65535	1792		1792

Pulse counter configuration and digital filter parameters in digital position control mode.

Bit0~bit1: pulse type

0 = STEP/DIR

1 = CW/CCW

2 = A/B quadrature

bit2: count direction

Bit8~bit15: digital filter parameter

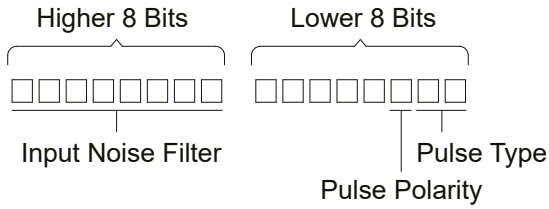

Please refer to 7.2.2 input pulse type and input noise filter

P-44 (PF)	Position Fault limit	Data Range	Default	Unit	LED Display
		0~32000	20000		20000

The Position Fault limit in encoder counts. This value defines the limit threshold, in encoder counts, reached between actual position and commanded position before the system produces a position

fault error. On drive's LED display, it will  if a Position Limit fault occurs.

P-45 (PL)	Dynamic Position error Range	Data Range	Default	Unit	LED Display
		0~32000	10		10

Define the usage of input X10 as inhibiting the pulse input.

PI1: Inhibit the pulse input when input X10 is closed.

PI2: Inhibit the pulse input when input X10 is open.

PI3: Input X10 is used as general purpose input.

P-46 (PD)	In-Position Error Range	Data Range	Default	Unit	LED Display
		0~32000	10		10

This parameter is used to set in-position error range. For example, motor is in position when the actual position is within the target In-position error range for the time that is longer than PE specified timing. Then the drive will define the motion complete or motor is in position. Refer to P-47 (PE).

Please refer to 7.2.7 in position error output

P-47 (PE)	In-Position duration count	Data Range	Default	Unit	LED Display
		0~32000	10	250us	10

PE sets the timing counts for In-Range determination. For example, if In-Position error P-46 (PD) is defined, PE sets the time duration for the test, if In-Position is reached within the time duration, drive will define motor as in-position.

Time is counted as processor cycles, one cycle refers to 250μsec.

Please refer to 7.2.7 in position error output

P-48 (TT)	Pulses Input Completion count	Data Range	Default	Unit	LED Display
		0~2500	2	ms	16

This parameter is used to define a time duration. It is used to determine whether the driver has finished receiving all pulses or not.

One count equivalent to 125μs

NOTE: if you need to view or set this value on the drive's control panel, refer to the following calculation:

LED display value = V / 0.125

Where **V** is time of pulse input completion count unit(ms)

P-49 (AP)	Analog Position Gain	Data Range	Default	Unit	LED Display
		0~32000	8000	counts	8000

AP sets the analog Input gain for motor position when the drive is in analog position command mode. Gain value sets the commanded position when the analog input is at the full scale value.

P-50 (AG)	Analog Velocity Gain	Data Range	Default	Unit	LED Display
		-100.000~100.000	20.000	rps	4800

Analog gain value used in analog velocity modes. The gain value is used to establish the relationship between the analog input and the motor speed. The units are 0.25 rpm. For example, if the analog input is scaled to 0 - 5 volt input and the gain is set to 2400, when 5 volts is read at the analog input the motor will spin at 10 rps.

TIP: To set the analog velocity gain to the desired value, multiply the desired motor speed in rps by 240, or the desired motor speed in rpm by 4.

NOTE: if you need to view or set this value on drive's control panel P-50 (AG), please refer to following calculation:

LED display value = **V** x 240

Where **V** is target velocity setting, Unit is rps (rev/sec).

P-51 (AN)	Analog Torque Gain	Data Range	Default	Unit	LED Display
		Drive's maximum current output ability	1.00	A	50

This parameter sets the analog Input gain that relates to motor torque when the drive is in analog torque control mode. Analog torque gain value sets the commanded torque when the analog input is at the configured full scale value (±10V)

NOTE: if you need to view or set this value on the drive's control panel, refer to the following calculation:

LED display value = A x 100

Where **A** is target toruqe setting, Unit is A (Amp)

P-52 (AV)	Analog input1 offset	Data Range	Default	Unit	LED Display
		-10.000~+10.000	0.000	A	0

The offset value of analog input 1 in volts. In some cases, even when the host sets the analog command to 0V, the servo motor might still rotate slowly. This is caused by voltage bias from the analog voltage supply. This can be adjusted by this offset value.

NOTE: if you need to view or set this value on drive's control panel, please refer to following calculation:

LED display value = **A** x 2730

Where **A** is voltage offset, Unit is V.

P-53 (AV)	Analog input2 offset	Data Range	Default	Unit	LED Display
		-10.000~+10.000	0.000	A	0

The offset value of analog input 2 in volts. Please refer to 7.4.3.3 analog input offset.

P-54 (AV)	Differential analog input offset	Data Range	Default	Unit	LED Display
		-10.000~+10.000	0.000	A	0

The offset value of differential analog input in volts. Please refer to 7.4.3.3 analog input offset.

P-55 (AS)	Analog type	Data Range	Default	Unit	LED Display
		0~1	1	-----	0

This is the analog input scaling setting. This is a code that determines what type of analog input scaling is desired.

0: single ended input

1: differential input

P-56 (AD)	Analog input1 deadband	Data Range	Default	Unit	LED Display
		0~255	0	mV	0

The analog deadband value of the analog input 1 in millivolts. The deadband value is the zone around the "zeroed"value of the analog input. This deadband defines the area of the analog input range that the drive should interpret as "zero". The deadband is an absolute value that is applied to either side of the zero point.

P-57 (AD)	Analog input2 deadband	Data Range	Default	Unit	LED Display
		0~255	0	mV	0

The analog deadband value of the analog input 2 in millivolts. The deadband value is the zone around the "zeroed" value of the analog input. This deadband defines the area of the analog input range that the drive should interpret as "zero". The deadband is an absolute value that is applied to either side of the zero point.

P-58 (AD)	Differential analog deadband	Data Range	Default	Unit	LED Display
		0~255	0	mV	0

The analog deadband value of the differential analog input in millivolts. The deadband value is the zone around the "zeroed"value of the analog input. This deadband defines the area of the analog input range that the drive should interpret as "zero". The deadband is an absolute value that is applied to either side of the zero point.

P-59 (AF)	Analog input filter value	Data Range	Default	Unit	LED Display
		1~15990	500	----	14418

Applies a digital filter to the analog input (s). This is a simple single pole filter that rolls off the analog input. When analog input is used, there might be external interferences that affect the accuracy of the analog input voltage. In some cases, it will cause the motor to turn unexpectedly, or unstable torque output. Therefore, analog input filter is recommended. It is designed as a digital low pass filter; reasonable filter frequency can significantly improve the motor performance. Please refer to 7.3.4 analog input filter

P-60 (AT)	Analog threshold	Data Range	Default	Unit	LED Display
		-10.000~10.000	0.000	V	0

This sets the analog Input Threshold that is used by the "Feed to Sensor" command. The threshold value sets the Analog voltage that determines a sensor state or a trigger value.

NOTE: if you need to view or set this value on drive's control panel P-60 (AT), please refer to following calculation:

LED display value = $\underline{A}$ x 1000

Where $\underline{A}$ is target voltage value, Unit is V (volts).

P-61 (FA)	Analog 1/2 function	Data Range	Default	Unit	LED Display
		00-33	33	---	33

Defines the function of the single analog input X1 and X2. It is defined by two digits, first from the right is X1, the other is X2

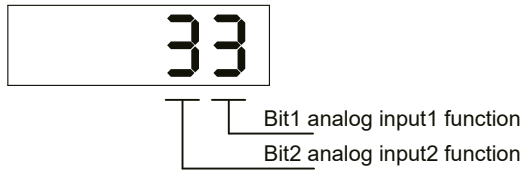

X1:

1: Analog input X1 is used as velocity or position reference input.

2: Not used.

3: Analog input X1 is used as general purpose analog input.

X2:

1: Not used.

2: Analog input X2 is used as torque reference input.

3: Analog input X2 is used as general purpose analog input.

In SVX ServoSUITE® parameter table, it is divided into 2 commands, FA1 for first bit, and FA2 for second bit (from right to left)

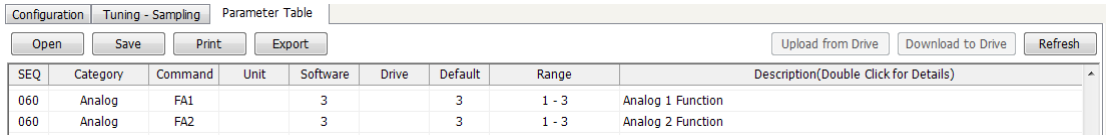

P-62 (SI)	Servo enable input setting	Data Range	Default	Unit	LED Display
		1, 2, 3	2	---	2

The usage of the Enable input. Input X3 is the default Enable input on all drives. There are 3 possible usage states for the Enable function:

SI1: Drive is enabled when X3 is open.

SI2: Drive is enabled when X3 is closed.

SI3: Input X3 is used as general purpose inputs.

Please refer to 7.1.1 servo on settings.

P-63 (AI)	Alarm Reset input setting	Data Range	Default	Unit	LED Display
		1, 2, 3	3	---	1

Defines the function of the X4 input. This input can be used to clear a drive fault and reset the Alarm Code (see AL command).

Please refer to 7.1.2 alarm reset

P-64 (DL)	End-of –travel limit Setting	Data Range	Default	Unit	LED Display
		1, 2, 3	3	---	3

CW and CCW end-of-travel limits are available on all drives and can be used to define the boundaries of acceptable motion in a motor/drive system.

For example, define inputs X5 and X6 as dedicated end-of-travel limits. If one of these inputs is activated while defined as an end-of-travel limit, motor rotation will stop in that direction, and an alarm code will show at the drive's status LEDs.

If not needed, X5 and X6 can be redefined as general purpose inputs. Please refer to 7.1.3 CW/CCW limit

P-65 (MI)	X7, X8, X9, X10 input function setting	Data Range	Default	Unit	LED Display
		1111~3333	3333	---	3333

Defines the functions for X7, X8, X9, X10 based on the number of digits from right to left .

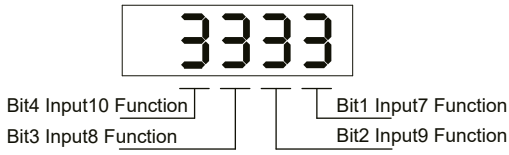

Bit1 defines X7 for control global gain selection function

1: When input X7 is open select parameter KG, close for parameter KP.

2: When input X7 is open select parameter KP, close for parameter KG.

3: X7 uses as general purpose, parameter KP is used.

Bit2 defines X9 for electronic gearing selection

1: When input X9 is open select parameter EG for electronic gearing, close for parameter PV for electronic gearing.

2: When input X9 is open select parameter PV for electronic gearing, close for parameter EG for electronic gearing.

3: X9 as general purpose, use parameter EG for electronic gearing.

Bit3 defines X8 control selection function

1: When input X8 is open select CN control mode, close for CM control mode.

2: When input X8 is open select CM control mode, close for CN control mode.

3: X8 as general purpose.

Bit4 defines X10 for pulse Inhibit function

1: When X10 is closed pulse Inhibit function is on

2: When X10 is open pulse Inhibit function is on

3: Input X10 set as general purpose

In SVX ServoSUITE® parameter table section, it is divided into 4 parameters, GS represents bit 1, DS represents bit 2, MS represents bit 3. PI represents bit 4

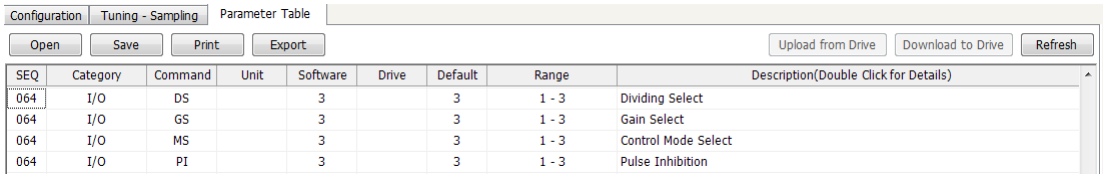

Please also refer to 7.1.4 gain selection function, 7.1.5 control mode selection, 7.2.3 input electronic gearing selection, and 7.2.4 pulse Inhibit function

P-66 (AO)	Alarm output function setting	Data Range	Default	Unit	LED Display
		1~3	1	---	1

Defines usage of digital output Y1. Normally this output is used to indicate an Alarm caused by a Drive Fault. This output can being reconfigured as a general purpose output for use with other types of output commands. There are three states that can be defined: AO1: Output Y1 is closed (active, low) when a Drive Fault is present. AO2: Output Y1 is open (inactive, high) when an Drive Fault is present. AO3: Output Y1 is not used as an Alarm Output and can be used as a general purpose output.

P-67 (BO)	Motor brake control setting	Data Range	Default	Unit	LED Display
		1~3	1	---	1

BO defines usage of digital output Y2 as the Brake Output, which can be used to automatically activate and deactivate a holding brake. Output Y2 can also be configured as a general purpose output for use with other types of output commands. There are three states that can be defined:

BO1: Output Y2 is closed (energized) when drive is enabled, and open when the drive is disabled.

BO2: Output Y2 is open (de-energized) when drive is enabled, and closed when the drive is disabled.

BO3: Output Y2 is not used as a Brake Output and can be used as a general purpose output.

Please also refer to 7.1.7 motor brake control

P-68 (MO)	Y3, Y4, Y5, Y6 output function setting	Data Range	Default	Unit	LED Display
			413D	---	413D

P-68 (MO) defines Y3, Y4, Y5, Y6 output functions. It is based on digits from right to left as viewed from front panel of SV200 drive.

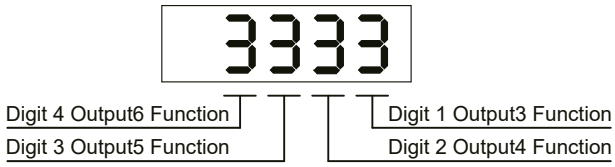

Defines the drive's Motion Output digital output function on output Y3. There are three Motion Output states that can be defined:

8: When the output torque reached the targeted torque, output Y3 is closed

9: When the output torque reached the targeted torque, output Y3 is open

3: Output Y3 is used as general output.

Defines the drive's Motion Output digital output function on output Y4. There are five Motion Output states that can be defined:

6: When the dynamic position error is within the range specified by PL command, output Y4 is closed.

7: When the dynamic position error is within the range specified by PL command, output Y4 is open.

A:When the actual velocity reached the targeted velocity, output Y4 is closed.

B:When the actual velocity reached the targeted velocity, output Y4 is open.

3: Output Y4 is used as general output.

Defines the drive's Motion Output digital output function on output Y5. There are 3 Motion Output states that can be defined:

1: When the drive is enabled, output Y5 is closed.

2: When the drive is enabled, output Y5 is open.

3: Output Y5 is used as general output.

Defines the drive's Motion Output digital output function on output Y6. There are 4 Motion Output states that can be defined:

4: When the motion is completed and the motor is in position, output Y6 is closed.

5: When the motion is completed and the motor is in position,, output Y6 is open.

C:When the motor is running, Y6 is set for tach output.

3: Output Y6 is used as general output.

In SVX ServoSUITE® parameter function, it is divided into 4 functions. MO1 for bit 1, MO2 for Bit 2, MO3 for bit 3, MO4 for bit 4

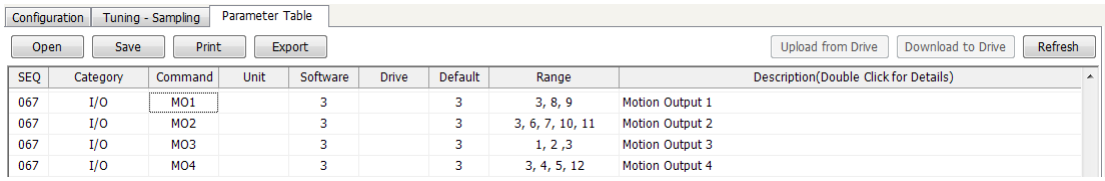

SEQ	Category	Command	Unit	Software	Drive	Default	Range	Description(Double Click for Details)
067	I/O	MO1		3		3	3, 8, 9	Motion Output 1
067	I/O	MO2		3		3	3, 6, 7, 10, 11	Motion Output 2
067	I/O	MO3		3		3	1, 2 ,3	Motion Output 3
067	I/O	MO4		3		3	3, 4, 5, 12	Motion Output 4

P-69 (BD)	Brake disengage Delay	Data Range	Default	Unit	LED Display
		0~32000	200	ms	200
P-70 (BE)	Brake engage delay	Data Range	Default	Unit	LED Display
		0~32000	200	ms	200

BD only takes effect if the BO command is set to 1 or 2. After a drive is enabled this is the time value that may delay a move waiting for the brake to disengage. When beginning a move the delay value must expire before a move can take place. The delay timer begins counting down immediately after the drive is enabled and the brake output is set. The BD command sets a time in milliseconds that a move may be delayed.

This Only takes effect if the BO command is set to 1 or 2. After a drive is commanded to be disabled,

this is the time value that delays the actual disabling of the driver output. When using the dedicated brake output

(see BO command) the output is activated immediately with the disable command, then the drive waits the delay

time before turning off the motor current.

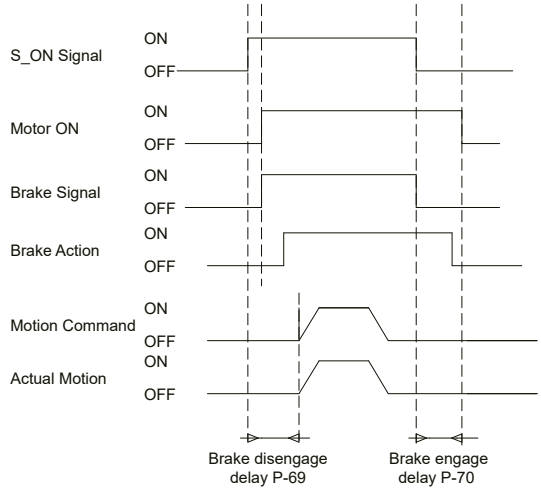

P-71 (FI)	Input X9 noise filter	Data Range	Default	Unit	LED Display
		0~32767	0	---	0

Applies a digital filter to the input X9. The digital input must be at the same level for the time period specified by the FI command before the input state is updated. For example, if the time value is set to 100 the input must remain high for 100 processor cycles before high is updated as the input state. One processor cycle is 250µsec. A value of “0” disables the filter.

P-72 (FI)	Input X10 noise filter	Data Range	Default	Unit	LED Display
		0~32767	0	---	0

Applies a digital filter to the input X10. The digital input must be at the same level for the time period specified by the FI command before the input state is updated. For example, if the time value is set to 100 the input must remain high for 100 processor cycles before high is updated as the input state. One processor cycle is 250µsec. A value of “0” disables the filter.

P-73 (FI)	Input X11 noise filter	Data Range	Default	Unit	LED Display
		0~32767	0	---	0

Applies a digital filter to the input X11. The digital input must be at the same level for the time period specified by the FI command before the input state is updated. For example, if the time value is set to 100 the input must remain high for 100 processor cycles before high is updated as the input state. One processor cycle is 250µsec. A value of “0” disables the filter.

P-74 (FI)	Input X12 noise filter	Data Range	Default	Unit	LED Display
		0~32767	0	---	0

Applies a digital filter to the input X12. The digital input must be at the same level for the time period specified by the FI command before the input state is updated. For example, if the time value is set to 100 the input must remain high for 100 processor cycles before high is updated as the input state. One processor cycle is 250µsec. A value of "0" disables the filter.

P-76 (PR)	Communication protocol	Data Range	Default	Unit	LED Display
		1-127	15	---	15

The serial communication protocol settings. There are a number of settings that can be turned on or off in the PR command. Each setting is assigned a bit in a 8-bit binary word. The parameter of the PR command is the decimal equivalent of this word. If you send the PR command without a parameter the drive will respond with the decimal equivalent of the word as well. The different protocol settings and their bit assignments are shown below.

Bit 0 = Default ("Standard SCL")

bit 1 = Always use Address Character

bit 2 = Ack/Nack

bit 3 = Checksum (RESERVED)

bit 4 = RS-485 Adaptor

bit 5 = 3-digit numeric register addressing

bit 6 = Checksum Type

bit 7 = Little endian or big endian used in MODBUS type drive

bit 8 = Four wires/two wires for RS-485 communication

P-77 (TD)	Transmit delay	Data Range	Default	Unit	LED Display
		0~100	2	---	2

The time delay used by the drive when responding to a command that requests a response. Typically this is needed when using the 2-wire RS-485 interface (Half-duplex). Because the same wires are used for both receive and transmit a time delay is usually needed to allow transition time.

P-78 (BR)	Baud rate	Data Range	Default	Unit	LED Display
		1~5	1	---	1

This parameter sets the bit rate (baud) for serial communications. At power up a drive will send its power-up packet detected after 1 second and the drive is configured for SCL or Q operation (see PM command) the drive will setthe baud rate according to the value stored in the Baud Rate NV parameter. A Host system can set the baud rate anytime using this command.

1 = 9600bps

2 = 19200bps

3 = 38400bps

4 = 57600bps

5 = 115200bps

P-79 (DA)	RS-485 Address	Data Range	Default	Unit	LED Display
		1~32	32	---	0

The individual drive address character for multi-drop RS-485/MODBUS communications. This command is not required for single-axis (point-to-point) or RS-232 communications

Modbus Address	SCL Address		Modbus Address	SCL Address
1	1		17	!
2	2		18	"
3	3		19	#
4	4		20	$
5	5		21	%
6	6		22	&
7	7		23	'
8	8		24	(
9	9		25	)
10	:		26	*
11	;		27	+
12	<		28	,
13	=		29	-
14	>		30	.
15	?		31	/
16	@		32	0

P-80 (CO)	CANopen Node ID or IP address Index Number	Data Range	Default	Unit	LED Display
		1~127	1	---	1

The CANopen NODE-ID forCANOpen type drives. Also used for IP address selection on Ethernet drives

P-80(CO)	IP Address	P-80(CO)	IP Address
0	10.10.10.10	8	192.168.0.80
1	192.168.1.10	9	192.168.0.90
2	192.168.1.20	A	192.168.0.100
3	192.168.1.30	B	192.168.0.110
4	192.168.0.40	C	192.168.0.120
5	192.168.0.50	D	192.168.0.130
6	192.168.0.60	E	192.168.0.140
7	192.168.0.70	F	DHCP

P-81 (CB)	CANopen Baudrate	Data Range	Default	Unit	LED Display
		0-7	0	---	0

CANopen drive supports 8 types for baud rate.

Setting value	Baud rate	Setting value	Baud rate
0	1M	4	125K
1	800K	5	50K
2	500K	6	25K
3	250K	7	12.5K

P-82 (ZR)	Regen resistor value	Data Range	Default	Unit	LED Display
		0-1000	40	Ω	200

The regeneration resistor value. SV200 dynamically calculate the continuous wattage induced into an external regeneration resistor and must know the value of the regen resistor to do this effectively.

P-83 (ZC)	Regen resistor continuous wattage	Data Range	Default	Unit	LED Display
		0-32000	200	W	40

This is used to calculate the continuous wattage induced into an external regeneration resistor and must know the continuous wattage rating of the regen resistor to do this effectively.

P-84 (ZT)	Regen resistor peak time	Data Range	Default	Unit	LED Display
		0-8000	250	ms	5000

The regeneration resistor time constant. Decides the peak time that the resistor can tolerate full regeneration voltage. The time is scaled as period count. One period is 250us.

NOTE: if you need to view or set this value on the drive's control panel refer to the following calculation:

LED display value = V x 4

Where **V** regeneration time, units (ms)

P-85 (VR)	Ripple range setting for velocity reached	Data Range	Default	Unit	LED Display
		0-136	0.000	rps	0

The velocity ripple value around the targeted velocity. If the difference between the actual velocity and targeted velocity is within the ripple value. The driver will then define actual velocity meets its target velocity value.

NOTE: if you need to view or set this value on the drive's control panel refer to the following calculation:

LED display value = V x 240

Where **V** is target veloicty, unit rps (rev/s), minimum value 1/240.

Please refer to 7.3.3.7 target velocity reached

P-86 (TO)	Tach out counts	Data Range	Default	Unit	LED Display
			0	---	0

The count value of tach out per revolution.

0 = 1 * pole pairs

1 = 2 * pole pairs

2 = 4 * pole pairs

3 = 8 * pole pairs

4 = 16 * pole pairs

5 = 32 * pole pairs

6 = 64 * pole pairs

7 = 128 * pole pairs

Note: For J series motors, pole pairs = 4.

P-87 (TV)	Ripple range setting for torque reached	Data Range	Default	Unit	LED Display
		0.00-1.50	0.00	A	0

The torque ripple value around the targeted torque. If the difference between the actual torque and targeted torque is within the ripple value. The driver will then define actual torque meets its target torque value.

NOTE: if you need to view or set this value on the drive's control panel refer to the following calculation:

LED display value = A x 100

Where **A** target torque value, unit A (amp)

Please refer to 7.4.3.7 torque reached for more details.

P-88 (PK)	Parameter lock on the drive's control panel	Data Range	Default	Unit	LED Display
		0-1	0		0

This parameter determines whether the parameters of the driver can be modified directly from the push bottoms on the driver.

0 = Yes

1 = No

P-89 (DD)	LED Default status monitor type	Data Range	Default	Unit	LED Display
		0~14	0		0

Sets or requests the default monitor status on the driver's LEDs display.

P-90 (MA)	LED Warning Display Mask Code	Data Range	Default	Unit	LED Display
		0~65535	65535		-1

This parameter setting can mask some unwanted warnings from driver's LED display. In order to avoid the constant flashing from the driver's display. However, it is limited to these warnings: CCW/CW Limits; under voltage; move while disabled; current foldback; blank Q segments, flash memory; Comm error.

P-91 (HA)	Accel of seeking end-of-travel limit during homing	Data Range	Default	Unit	LED Display
		0.167~5000	100	rps/s	600

In homing mode, this parameter sets the acceleration rate for seeking the end of travel limit.

Please refer to the graph below.

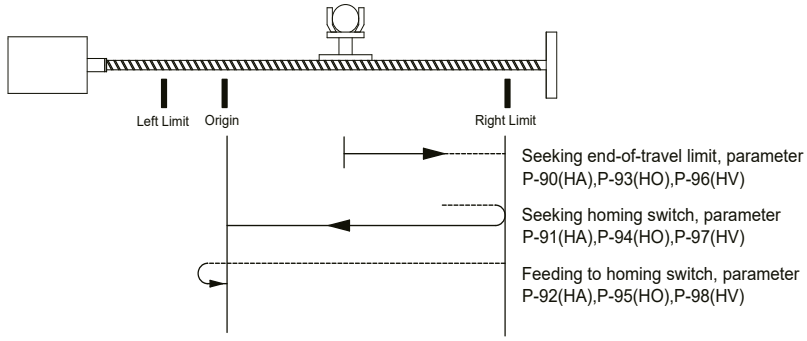

P-92 (HA)	Accel of seeking homing switch during homing	Data Range	Default	Unit	LED Display
		0.167~5000	10	rps/s	60

In homing mode, after end of travel is reached, this sets the acceleration rate for seeking the homing switch.

Please refer to parameter P-91 (HA)

P-93 (HA)	Accel of feeding to homing switch during homing	Data Range	Default	Unit	LED Display
		0.167~5000	10	rps/s	60

In homing mode, after the homing switch is reached it sets the acceleration rate for feed back to the homing switch.

Please refer to parameter P-91 (HA)

P-94 (HO)	Decel of seeking end-of-travel limit during homing	Data Range	Default	Unit	LED Display
		0.167~5000	100	rps/s	600

In homing mode, this parameter sets the deceleration rate for seeking the end of travel limit.
Please refer to parameter P-91 (HA)

P-95 (HO)	Decel of seeking homing switch during homing	Data Range	Default	Unit	LED Display
		0.167~5000	10	rps/s	600

In homing mode, after end of travel is reached, this sets the deceleration rate for seeking the homing switch.
Please refer to parameter P-91 (HA)

P-96 (HO)	Decel of feeding to homing switch during homing	Data Range	Default	Unit	LED Display
		0.167~5000	10	rps/s	60

In homing mode, after the homing switch is reached it sets the deceleration rate for feed back to the homing switch.
Please refer to parameter P-91 (HA)

P-97 (HV)	Velocity of seeking end-of-travel limit during homing	Data Range	Default	Unit	LED Display
		0.167~5000	10	rps/s	2400

In homing mode, this parameter sets the velocity rate for seeking the end of travel limit.
Please refer to parameter P-91 (HA)

P-98 (HV)	Velocity of seeking homing switch during homing	Data Range	Default	Unit	LED Display
		0.167~5000	10	rps/s	1200

In homing mode, after end of travel is reached, this sets the velocity rate for seeking the homing switch.
Please refer to parameter P-91 (HA)

P-99 (HV)	Velocity of feeding to homing switch during homing	Data Range	Default	Unit	LED Display
		0.167~5000	10	rps/s	120

In homing mode, after the homing switch is reached it sets the velocity rate for feed back to the homing switch.
Please refer to parameter P-91 (HA)

P-100 (KL)	Follow factor	Data Range	Default	Unit	LED Display
		-32000~+32000	0		0

Servo follow factor: Higher value will reduce system noise, eliminate the overshoot, but it will reduce the system dynamic following performance. Lower value will raise system stiffness, but may cause system noise.

P-101 (RD)	Select Motor Rotation	Data Range	Default	Unit	LED Display
		0 , 1	0		0

Motor Rotation	Value
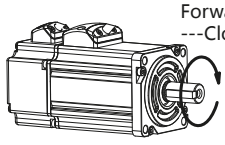 Forward direction ---Clockwise	0
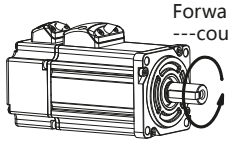 Forward direction ---counterclockwise	1

9 Communication

SV200 series servo drives are available with several choices of communication interface, represented by a character in the model number

Model type	Communication
SV2xx-Q-AE	RS-232
SV2xx-Q-RE	RS-485
SV2xx-C-CE	CANopen
SV2xx-IP-EE	EtherNet/IP
SV2xx-Q-EE	Ethernet

9.1 RS-232 communication

For Q type drives, port CN6 is used for RJ-11 communication port, it is used for RS-232 communication. Customers can use serial communication command SCL to control the drive.

9.1.1 What is SCL

SCL or serial command language, provides a simple way to control a motor drive via a serial port. This eliminates the need for separate motion controllers or to supply control signals, like Pulse & Direction, to your step and servo motor drives. It also provides an easy way to interface to a variety of other industrial devices like PLCs, industrial computers, and HMIs, which most often have standard or optional serial ports for communicating to other devices.

NOTE: For more details about SCL command, please download Host Command Reference manual.

9.1.2 RS-232 Connections

For servo drive port CN6, RJ-11 pin definitions are as follows:

PIN	Definition
1, 3, 6	Not used
2	RX
4	TX
5	GND

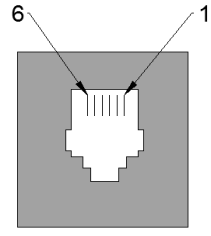

9.2 RS-485 Communication

R type drive uses port CN6 and CN7 for standard RJ45 (8p8C) design. This can be used to build RS-485 daisy chain networks. In addition to the SCL command controlling methods, customers can also use ModBUS/RTU to control the drive.

9.2.1 RS-485 PIN definition

For RS-485 communication, use the dual RJ45 connectors (CN6 & CN7) on the side of the drive to build the daisy chain network system.

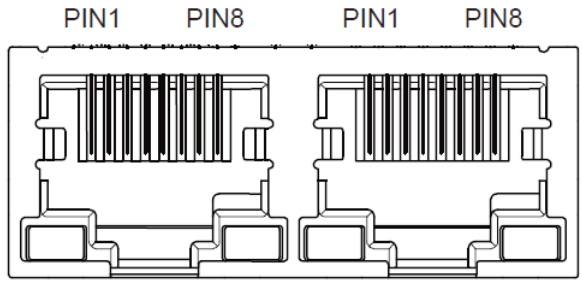

Pin definitions as follows:

PIN	Definition
4, 5, 7, 8	GND
1	RX+
2	RX-
3	TX+
6	TX-

NOTE: Do not connect mini USB (CN1) and RS-485 connections (CN6 & CN7) at the same time. Communication is only possible through one or the other, but not both.

9.2.2 RS-485 Connection Method

RS-422/485 communication allows connection of more than one drive to a single host PC, PLC, HMI or other computer. It also allows the communication cable to be long. The use of Category 5 cable is recommended as it is widely used for computer networks, inexpensive, easily obtained and certified for quality and data integrity.

The SV200 series drives can be used with either Two-Wire or Four-Wire RS-422/485 implementation. The connection can be point-to-point (i.e. one drive and one host) or a multi-drop network (one host and up to 32 drives).

Four-Wire Configuration

Four-Wire Systems utilize separate transmit and receive wires. One pair of wires must connect the host's transmit signals to each drive's RX+ and RX- terminals. The other pair connects the drive's TX+ and TX- terminals to the host's receive signals. A logic ground terminal is provided on each drive and can be used to keep all drives at the same ground potential. This terminal connects internally to the DC power supply return (V-), so if all the drives on the RS-422/485 network are powered from the same supply it is not necessary to connect the logic grounds. One drive's GND terminal should still be connected to the host computer ground.

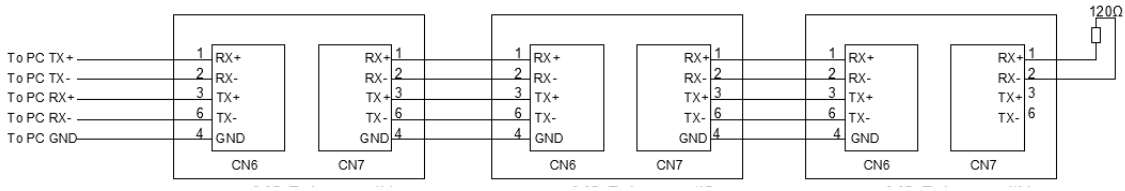

Two-Wire Configuration

In a 2-wire system, the host must disable its transmitter before it can receive data. This must be done quickly before a drive begins to answer a query. The SV200 series drives include a transmit delay parameter that can be adjusted to compensate for a host that is slow to disable its transmitter. This adjustment can be made over the network using the TD command, or it can be set using the SVX ServoSUITE®. It is not necessary to set the transmit delay in a four wire system.

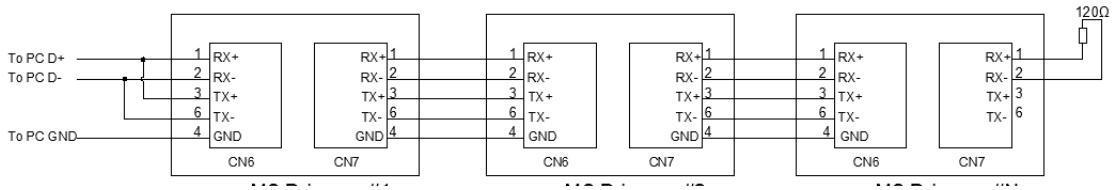

NOTE: For the 120 ohm terminating resistor, we recommend crimping the resistor leads into an RJ45 8 pin modular plug.

9.3 ModBUS/RTU Communication

SV200 servo drives support the Modbus/RTU protocol over RS-485 connections only. Modbus is a popular communication standard for HMI's and PLC's. Sample code and application notes are available at http://www.applied-motion.com/support/application-notes

9.3.1 Data Encoding

Big-endian: The most significant byte (MSB) value is stored at the memory location with the lowest address; the next byte value in significance is stored at the following memory location and so on. This is akin to Left-to-Right reading in hexadecimal order.

For example: To store a 32bit data 0x12345678 into register address 40031 and 40032. 0x1234 will be defined as MSB, and 0x5678 as LSB. With big-endian system

Register 40031 = 0x1234

Register 40032 = 0x5678

When transfer 0x12345678, the first word will be 0x1234, and the second word will be 0x5678

Little-endian: The most significant byte (MSB) value is stored at the memory location with the highest address; the next byte value in significance is stored at the following memory location and so on. This is akin to Left-to-Right reading in hexadecimal order.

For example: To store a 32bit data 0x12345678 into register address 40031 and 40032. 0x5678 will be defined as MSB, and 0x1234 as LSB. With little-endian system

Register 40031 = 0x5678

Register 40032 = 0x1234

When transfer 0x12345678, the first words will be 0x5678, and the second words will be 0x1234

SV200 drive parameter P-75 (PR) defines data transfer type

P-75 (PR) = 5 represents Big-Endian

P-75 (PR) = 133 represents Little-Endian

9.3.2 Communication Address

In the network system, each drive requires a unique drive address. Only the drive with the matching address will responded to the host command. In ModBUS network, address "0" is the broadcast address. It cannot be used for individual drive's address. ModBUS RTU/ ASCII can set drive address from 1 to 31.

9.3.3 Communication Baud Rate And Framing

SV200 series servo drives have fixed communication data framing: 8 data bits, one stop bit, no parity.

Parameter P-77 (BR) defines the communication baud rate.

In serial communication, the change of baudrate will NOT effect immediately, it will ONLY effects at next power up of the drive.

1 = 9600bps

2 = 19200bps

3 = 38400bps

4 = 57600bps

5 = 115200bps

9.3.4 Power Up Mode

Parameter P-14 (PM) sets the power up mode for the drive. For current SV200 series servo drives, these are the power up modes:

8 = Modbus/RTU mode when powered up.

9 = Q mode with Modbus/RTU communication, stored Q program auto-executes when powered up.

9.3.5 Modbus/RTU Data Framing

ModBUS RTU is a master and slave communication system. The CRC checking code includes from drive's address bits to data bits. This standard data framing are as follows:

Address	Function	Data	CRC

based on data transfer status, there can be two types of response code:

Normal ModBUS response:

response function code = request function code

ModBUS error response:

response function code = request function code + 0x80

providing an error code to indicate the error reasoning.

9.3.6 SV200 Series AC Servo Drive Register Address And Function List:

Modbus Register Table				
Register	Access	Data Type	SCL Register	Description
40001	Read Only	SHORT	Alarm Code (AL)	f
40002	Read Only	SHORT	Status Code (SC)	s
40003	Read Only	SHORT	Drive Digital output	
40004	Read Only	SHORT	Drive Digital output	i
40005..6	Read Only	LONG	Encoder Position (IE, EP)	e
40007..8	Read Only	LONG	Immediate Absolute Position(IP)	I
40009..10	Write	LONG	Absolute Position Command(SP)	P(Capital)
40011	Read Only	SHORT	Immediate Actual Velocity (IVO)	v
40012	Read Only	SHORT	Immediate Target Velocity (IV1)	w
40013	Read Only	SHORT	Immediate Drive Temperature (IT)	t
40014	Read Only	SHORT	Immediate Bus Voltage (IU)	u
40015..16	Read Only	LONG	Immediate Position Error (IX)	x
40017	Read Only	SHORT	Immediate Analog Input Value (IA)	a
40018	Read Only	SHORT	Q Program Line Number	b
40019	Read Only	SHORT	Immediate Current Command (IC)	c
40020..21	Read Only	LONG	Relative Distance (ID)	d
40022..23	Read Only	LONG	Sensor Position	g
40024	Read Only	SHORT	Condition Code	h
40025	Read Only	SHORT	Analog Input 1 (IA1)	j
40026	Read Only	SHORT	Analog Input 2 (IA2)	k
40027	Read Only	SHORT	Command Mode (CM)	m
40028	R/W	SHORT	Point-to-Point Acceleration (AC)	A
40029	R/W	SHORT	Point-to-Point Deceleration (DE)	B
40030	R/W	SHORT	Velocity (VE)	V
40031..32	R/W	LONG	Point-to-Point Distance (DI)	D
40033..34	R/W	LONG	Change Distance (DC)	C
40035	R/W	SHORT	Change Velocity (VC)	U
40036	Read Only	SHORT	Velocity Move State	n
40037	Read Only	SHORT	Point-to-Point Move State	o
40038	Read Only	SHORT	Q Program Segment Number	p
40039	Read Only	SHORT	Reserved	
40040	Read Only	SHORT	Phase Error	z

40041..42	R/W	LONG	Position Offset	E
40043	R/W	SHORT	Miscella neous Flags	F
40044	R/W	SHORT	Current Command (GC)	G
40045..46	R/W	LONG	Input Counter	I
40047	R/W	SHORT	Jog Accel (JA)	
40048	R/W	SHORT	Jog Decel (JL)	
40049	R/W	SHORT	Jog Velocity (JS)	J
40050	R/W	SHORT	Max Velocity	
40051	R/W	SHORT	Continuous Current(CC)	N
40052	R/W	SHORT	Peak Current (CP)	O(Capital)
40053	Read Only	SHORT	Reserved	
40054..55	R/W	LONG	Pulse Counter	S
40056	R/W	SHORT	Analog Position Gain (AP)	X
40057	R/W	SHORT	Analog Threshold (AT)	Y
40058	R/W	SHORT	Analog Offset (AV)	Z
40059..60	R/W	LONG	Accumulator	0
40061..62	R/W	LONG	User Defined Register	1
40063..64	R/W	LONG	User Defined Register	2
40065..66	R/W	LONG	User Defined Register	3
40067..68	R/W	LONG	User Defined Register	4
40069..70	R/W	LONG	User Defined Register	5
40071..72	R/W	LONG	User Defined Register	6
40073..74	R/W	LONG	User Defined Register	7
40075..76	R/W	LONG	User Defined Register	8
40077..78	R/W	LONG	User Defined Register	9
40079..80	R/W	LONG	User Defined Register	:
40081..82	R/W	LONG	User Defined Register	;
40083..84	R/W	LONG	User Defined Register	<
40085..86	R/W	LONG	User Defined Register	=
40087..88	R/W	LONG	User Defined Register	>
40089..90	R/W	LONG	User Defined Register	?
40091..92	R/W	LONG	User Defined Register	@
40093..94	R/W	LONG	User Defined Register	[
40095..96	R/W	LONG	User Defined Register	\
40097..98	R/W	LONG	User Defined Register	]
40099..100	R/W	LONG	User Defined Register	^
40101..102	R/W	LONG	User Defined Register	_
40103..104	R/W	LONG	User Defined Register	`
40105	R/W	SHORT	Brake Release Delay(BD)	
40106	R/W	SHORT	Brake Engage Delay(BE)	
40107	Read Only	SHORT	Reserved	
40108	Read Only	SHORT	Reserved	
40109	Read Only	SHORT	Firmware version	
40110	R/W	SHORT	Analog Filter Gain(AF)	
40111	Read Only	SHORT	Reserved	
40112	Read Only	SHORT	Alarm Code High bit	
40113	R/W	SHORT	Jog Change(JC)	
40114	R/W	SHORT	Jog Change(JC)	
40115	R/W	SHORT	Jog Change(JC)	

40116	R/W	SHORT	Jog Change(JC)	
40117	R/W	SHORT	Jog Change(JC)	
40118	R/W	SHORT	Jog Change(JC)	
40119	R/W	SHORT	Jog Change(JC)	
40120	R/W	SHORT	Jog Change(JC)	
40121	R/W	SHORT	X9 Input Filter	
40122	R/W	SHORT	X10 Input Filter	
40123	R/W	SHORT	X11 Input Filter	
40124	R/W	SHORT	X12 Input Filter	
40125	R/W	SHORT	Command Opcode	
40126	R/W	SHORT	Parameter 1	
40127	R/W	SHORT	Parameter 2	
40128	R/W	SHORT	Parameter 3	
40129	R/W	SHORT	Parameter 4	
40130	R/W	SHORT	Parameter 5	
40131	R/W	SHORT	Global Gain(KP)	
40132	R/W	SHORT	Global Gain1(KG)	
40133	R/W	SHORT	Proportional Gain(KF)	
40134	R/W	SHORT	Damping Gain(KD)	
40135	R/W	SHORT	Velocity Gain(KV)	
40136	R/W	SHORT	Integral Gain(KI)	
40137	R/W	SHORT	Inertia Feed forward Gain(KK)	
40138	R/W	SHORT	Jerk Filter(KJ)	
40139	R/W	SHORT	Velocity Mode Proportional Gain(VP)	
40140	R/W	SHORT	Velocity Mode Integral Gain(VI)	
40141	R/W	SHORT	Damping Filter Gain(KE)	
40142	R/W	SHORT	Current Filter Gain(KC)	
40143	R/W	SHORT	Control Mode(CM)	
40144	R/W	SHORT	Control Mode 1(CN)	
40145	R/W	SHORT	Operation Mode(PM)	
40146	R/W	SHORT	Jog Mode(JM)	
40147	R/W	SHORT	Hard-Stop Current Limit(HC)	
40148	R/W	SHORT	Max Acceleration(AM)	
40149	Read Only	SHORT	Encoder Resolution(ER)	
40150	Read Only	SHORT	Reserved	
40151	Read Only	SHORT	Steps-Rev(EG)	
40152	R/W	SHORT	Electronic Ration Numerator(EN)	
40153	R/W	SHORT	Electronic Ration Denominator(ED)	
40154	Read Only	SHORT	Step Mode (SZ)	
40155	R/W	SHORT	Position Fault(PF)	
40156	R/W	SHORT	Dynamic Position Error Count(PL)	
40157	R/W	SHORT	In-Position Counts(PD)	
40158	R/W	SHORT	In-Position Timing(PE)	
40159	R/W	SHORT	Pulse Complete Timing(TT)	
40160	R/W	SHORT	Analog Velocity Gain(AG)	
40161	R/W	SHORT	Analog Torque Gain(AN)	
40162	R/W	SHORT	Analog Offset 1(AV1)	
40163	R/W	SHORT	Analog Offset 2(AV2)	
40164	R/W	SHORT	Analog Type(AS)	

40165	R/W	SHORT	Analog Deadband 1(AD1)	
40166	R/W	SHORT	Analog Deadband 2(AD2)	
40167	R/W	SHORT	Analog Deadband (AD)	
40168	R/W	SHORT	Analog Function(FA)	
40169	R/W	SHORT	Servo Enable(SI)	
40170	R/W	SHORT	Alarm Reset(AI)	
40171	R/W	SHORT	Define Limits Input(DL)	
40172	R/W	SHORT	Motion Input	
40173	R/W	SHORT	Alarm Output(AO)	
40174	R/W	SHORT	Brake Output(BO)	
40175	R/W	SHORT	Motion Output(MO)	
40176	R/W	SHORT	Reserved	
40177	R/W	SHORT	Communication Protocol(PR)	
40178	R/W	SHORT	Transmit Delay(TD)	
40179	R/W	SHORT	Baud Rate(BR)	
40180	R/W	SHORT	Communication Address(DA)	
40181	R/W	SHORT	Velocity value(VR)	
40182	R/W	SHORT	Tach-out Count(TO)	
40183	R/W	SHORT	Torque Value(TV)	
40184	R/W	SHORT	Parameters Lock(PK)	
40185	R/W	SHORT	Default Display(DD)	
40186	R/W	SHORT	Mask Alarm(MA)	
40187	R/W	SHORT	Homing Acceleration 1	
40188	R/W	SHORT	Homing Acceleration 2	
40189	R/W	SHORT	Homing Acceleration 3	
40190	R/W	SHORT	Homing Deceleration 1	
40191	R/W	SHORT	Homing Deceleration 2	
40192	R/W	SHORT	Homing Deceleration 3	
40193	R/W	SHORT	Homing Velocity 1	
40194	R/W	SHORT	Homing Velocity 2	
40195	R/W	SHORT	Homing Velocity 3	
40196	R/W	SHORT	Clamp Resistance(ZR)	
40197	R/W	SHORT	Clamp Count (ZC)	
40198	R/W	SHORT	Clamp time(ZT)	
40199	Read Only	SHORT	Reserved	
40200	Read Only	SHORT	Reserved	

9.3.7 Command Opcode description

Register 40125 is defined as command Opcode, when following command is entered into register, the drive will execute the corresponding operation.

1) SCL Command Encoding Table

SCL Command Encoding Table							
Function	SCL	Opcode	Parameter 1	Parameter 2	Parameter 3	Parameter 4	Parameter 5
Alarm Reset	AX	0xBA	×	×	×	×	×
Start Jogging	CJ	0x96	×	×	×	×	×
Stop Jogging	SJ	0xD8	×	×	×	×	×
Encoder Function	EF	0xD6	0,1,2 or 6	×	×	×	×
Encoder Position	EP	0x98	Position	×	×	×	×
Feed to Double Sensor	FD	0x69	I/O Point 1	Condition 1	I/O Point 2	Condition 2	×
Follow Encoder	FE	0xCC	I/O Point	Condition	×	×	×
Feed to Length	FL	0x66	×	×	×	×	×
Feed to Sensor with Mask Distance	FM	0x6A	I/O Point	Condition	×	×	×
Feed and Set Output	FO	0x68	I/O Point	Condition	×	×	×
Feed to Position	FP	0x67	×	×	×	×	×
Feed to Sensor	FS	0x6B	I/O Point	Condition	×	×	×
Feed to Sensor with Safety Distance	FY	0x6C	I/O Point	Condition	×	×	×
Jog Disable	JD	0xA3	×	×	×	×	×
Jog Enable	JE	0xA2	×	×	×	×	×
Motor Disable	MD	0x9E	×	×	×	×	×
Motor Enable	ME	0x9F	×	×	×	×	×
Seek Home	SH	0x6E	I/O Point	Condition	×	×	×
Set Position	SP	0xA5	Position	×	×	×	×
Filter Input	FI	0xC0	I/O Point	Filter Time	×	×	×
Filter Select Inputs	FX	0xD3	×	×	×	×	×
Step Filter Freq	SF	0x06	Freq	×	×	×	×
Analog Deadband	AD	0xD2	0.001 V	×	×	×	×
Alarm Reset Input	AI	0x46	Function ('1'..'3')	I/O Point	×	×	×
Alarm Output	AO	0x47	Function ('1'..'3')	I/O Point	×	×	×
Analog Scaling	AS	0xD1	×	×	×	×	×
Define Limits	DL	0x42	1..3	×	×	×	×
Set Output	SO	0x8B	I/O Point	Condition	×	×	×
Wait for Input	WI	0x70	×	×	×	×	×
Queue Load & Execute	QX	0x78	1..12	×	×	×	×
Wait Time	WT	0x6F	0.01 sec	×	×	×	×
Stop Move, Kill Buffer	SK	0xE1	×	×	×	×	×
Stop Move, Kill Buffer	SKD	0xE2	×	×	×	×	×

For more detailed descriptions, please refer to Host Command Reference manual.

2) Digital I/O Function Selection And I/O Status

Character	hex code	Description
'0'	0x30	encoder index
'1'	0x31	input 1 or output 1
'2'	0x32	input 2 or output 2
'3'	0x33	input 3 or output 3
'4'	0x34	input 4 or output 4
'5'	0x35	input 5 or output 5
'6'	0x36	input 6 or output 6
'7'	0x37	input 7
'8'	0x38	input 8
'9'	0x39	input 9
':'	0x3A	input 10
';'	0x3B	input 11
'<'	0x3C	input 12
'L'	0x4C	low state (closed)
'H'	0x48	high state (open)
'R'	0x52	rising edge
'F'	0x46	falling edge

9.3.8 Function Code

SV200 series servo drives currently support following Modbus function code:

1) 0x03: Read holding registers

2) 0x04: Read input registers

3) 0x06: Write single registers

4) 0x10: Write multiple registers

9.3.8.1 Function Code 0X03, Reading Multiple Holding Registers

If we want to read encoder's actual position command to drive Node ID 1, the data address for encoder's actual position is register 40005. If the register value is in decimal numbers it will be 2,500,000, and the transfer method is P-75 (PR) = 5, for big-endian transfer.

Communication details are:

Command Message (Master)		
Function	Data	Number Of Bytes
Slave Address	01H	1
Function Code	03H	1
Starting Data Address	00H (High) 04H (Low)	2
Number of Data (In word)	00 (High) 02 (Low)	2
CRC Check Low	85	1
CRC Check High	CA	1

Response Message (slave)		
Function	Data	Number Of Bytes
Slave Address	01H	1
Function Code	03H	1
Number of Data (In Byte)	04	1
Content of Starting Data Address 40005	00H (High) 26H (Low)	2
Content of second Data Address 40006	25H (High) A0 (Low)	2
CRC Check Low	01H	1

Host Sending: 01 03 00 04 00 02 85 CA

Drive Reply: 01 03 04 00 26 25 A0 01 10

If error is occurred, drive reply format: 01 83 XX CRC_L CRC_H

Where XX = 01: Function code 03 unsupported

XX = 02: Incorrect reading on driving address or numbers

XX = 03 : Reading register address out of range

XX = 04 : Reading failure

9.3.8.2 Function Code 0x06, Writing Single Register

If we want to set motor rotary velocity 12.5 rps to drive node ID 11, the corresponding address is register 40030. The write in data value for the register will be 12.5 x 240 = 3000. In hexadecimal number, it is 12CH.

Communication Details are:

Command Message (Master)				Response Message (slave)		
function	data	number of bytes		function	data	number of bytes
Slave Address	0BH	1		Slave Address	0BH	1
Function Code	06H	1		Function Code	06H	1
Starting Data Address	00H (High) 1DH (Low)	2		Starting Data Address	00H (High) 1DH (Low)	2
Content of Data	01 (High) 2C (Low)	2		Content of Data	01 (High) 2C (Low)	2
CRC Check Low	19	1		CRC Check Low	19	1
CRC Check High	2B	1		CRC Check High	2B	1

Host Sending: 0B 06 00 1D 01 2C 19 2B

Drive Reply: 0B 06 00 1D 01 2C 19 2B

If error is occurred, drive reply format: 01 86 XX CRC_L CRC_H

Where XX = 01 : Function code 06 unsupported

XX = 02 : Incorrect writing on driving address or number

XX = 03 : Writing register address out of range

XX = 04 : Writing failure

9.3.8.3 Function Code 0X10, Writing Multiple Registers

If we writing target distance 30000 into drive NODE-ID 10, the correspondent register address will be 40031. Transfer into hexadecimal, it is 7530h.

Communication Details are:

Command Message (Master)				Response Message (slave)		
Function	Data	Number Of Bytes		Function	Data	Number Of Bytes
Slave Address	0AH	1		Slave Address	0AH	1
Function Code	10H	1		Function Code	10H	1
Starting Data Address	00H (High) 1EH (Low)	2		Starting Data Address	00H (High) 1EH (Low)	2
Number of Data (In word)	00H (High) 02H (Low)	2		Number of Data (In word)	00H (High) 02H (Low)	2
Number of Data (In byte)	04H	1		CRC Check Low	20	1
Content of first Data address	00 (High) 00 (Low)	2		CRC Check High	B5	1
Content of second Data address	75H (High) 30H (Low)	2				
CRC Check Low	70	1				
CRC Check High	8F	1				

Host Sending: 0A 10 00 1E 00 02 04 00 75 30 70 8F

Drive Reply: 0A 10 00 1E 00 02 20 B5

If error is occurred, drive reply format: 01 90 XX CRC_L CRC_H

Where XX = 01 : Function code 10 unsupported

XX = 02 : Incorrect reading on driving address or number

XX = 03 : Reading register address out of range

XX = 04 : Reading failure

9.3.9 Modbus/RTU Applications

9.3.9.1 Position Control

1.Target Profile Planning

SCL command	Target Value	Unit	Register	Value Dec (Hex)	Description
AC	100	rps/s	40028	600 (258h)	The unit for register 40028 is $\frac{1}{6}rps^2$, when target acceleration is 100rps/s, the value will be 600
DE	200	rps/s	40029	1200 (4B0h)	The unit for register 40029 is $\frac{1}{6}rps^2$. When target deceleration is 200rps/s, the value will be 1200
VE	10	rps	40030	2400 (960h)	The unit for register 40030 is $\frac{1}{240}rps$. When target velocity is 10rps, the value will be 2400
DI	20000	counts	40031~40032	20000 (4E20h)	The target distance will be 20000 counts

2. Drive Setting

Parameter	Function
P-75 (PR) = 5	Big-endian data transfer
P-76 (TD) = 10	feedback delay 10ms
P-77 (BR) = 3	communication baud rate 38400bps
P-78 (DA) = 1	Communication address 1
P-14 (PM) = 8	Power up mode as Modbus/RTU

Use SVX ServoSUITE® for configurations:

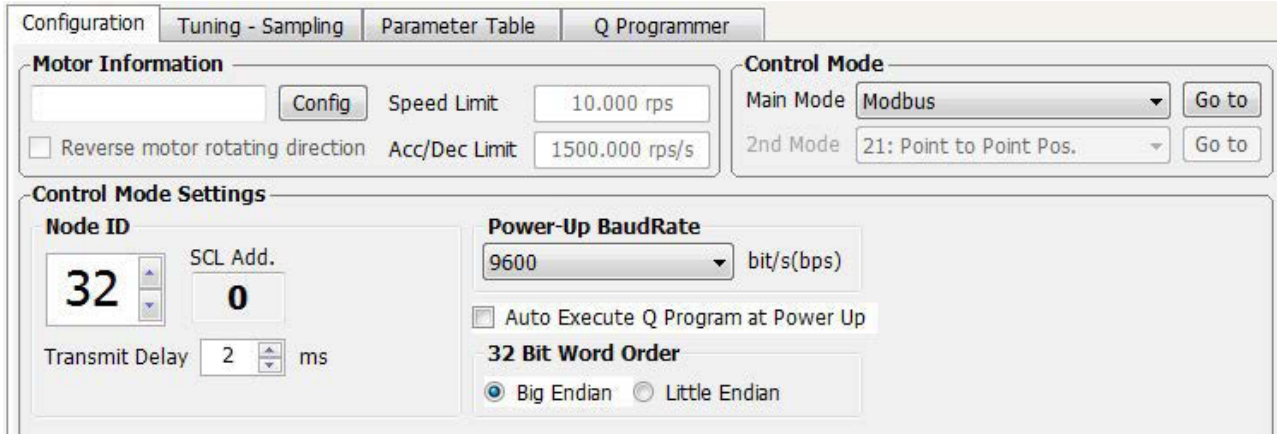

3. Sending Command

First Step :

Set acceleration register 40028 = 285h, deceleration register 40029 = 4B0h, velocity register 40030 = 960h, and target position 40031~40032 = 4E20h.

Host Sending: 01 10 00 1B 00 05 0A 02 58 04 B0 09 60 00 00 4E 20 24 3B

Drive Respond: 01 10 00 1B 00 05 70 0D

Command Message (Master)		
Function	Data	Number Of Bytes
Slave Address	01H	1
Function Code	10H	1
Starting Data Address	00H (High) 1BH (Low)	2
Number of Data (In word)	00H (High) 05H (Low)	2
Number of Data (In word)	0AH	1
Content of first Data address 40028	02 (High) 58 (Low)	2
Content of second Data address 40029	04H (High) B0H (Low)	2
Content of third Data address 40030	09H (High) 60H (Low)	2
Content of fourth Data address 40031	00H (High) 00H (Low)	2
Content of fifth Data address 40032	4EH (High) 20H (Low)	2
CRC Check Low	24	1
CRC Check High	3B	1

Command Message (Slave)		
Function	Data	Number Of Bytes
Slave Address	01H	1
Function Code	10H	1
Starting Data Address	00H (High) 1BH (Low)	2
Number of Data (In word)	00H (High) 05H (Low)	2
CRC Check Low	70	1
CRC Check High	0D	1

Second Step: Point To Point Motion Command

Chapter 9.3.7 command opcode describes register 40125's control code. From the SCL code list shows that for point to point position motion, it requires to write data 0x66 to register 40125.

SCL Command Encoding Table							
Function	SCL	Opcode	Parameter 1	Parameter 2	Parameter 3	Parameter 4	Parameter 5
Feed to Length	FL	0x66	×	×	×	×	×

Host Sending: 01 06 00 7C 00 66 C8 38

Drive Reply: 01 06 00 7C 00 66 C8 38

Listed As Below:

Command Message (Master)		
Function	Data	Number Of Bytes
Slave Address	01H	1
Function Code	06H	1
Starting Data Address	00H (High) 7CH (Low)	2
Content of Data	00 (High) 66 (Low)	2
CRC Check Low	C8	1
CRC Check High	38	1

Command Message (Slave)		
Function	Data	Number Of Bytes
Slave Address	01H	1
Function Code	06H	1
Starting Data Address	00H (High) 7CH (Low)	2
Content of Data	00 (High) 66 (Low)	2
CRC Check Low	C8	1
CRC Check High	38	1

9.3.9.2 JOG mode

1. JOG mode required parameters:

SCL command	Target Value	Unit	Dec	Dec (Hex)	Description
AC	100	rps/s	40047	600 (258h)	The unit for register 40028 is $\frac{1}{6}rps^2$, when target acceleration is 100rps/s, the value will be 600
JL	200	rps/s	40048	1200 (258h)	The unit for register 40029 is $\frac{1}{6}rps^2$. When target deceleration is 200rps/s, the value will be 1200
JS	10	rps	40049	2400 (960)	The unit for register 40030 is $\frac{1}{240}rps$. When target velocity is 200rps/s, the value will be 1200

2. Drive Setting

Parameter	Function
P-75 (PR) = 5	Big-endian data transfer
P-76 (TD) = 10	Feedback delay 10ms
P-77 (BR) = 3	Communication baud rate 38400bps
P-78 (DA) = 1	Communication address 1
P-14 (PM) = 8	Power up mode as modbus/rtu

Use SVX ServoSUITE® for configurations:

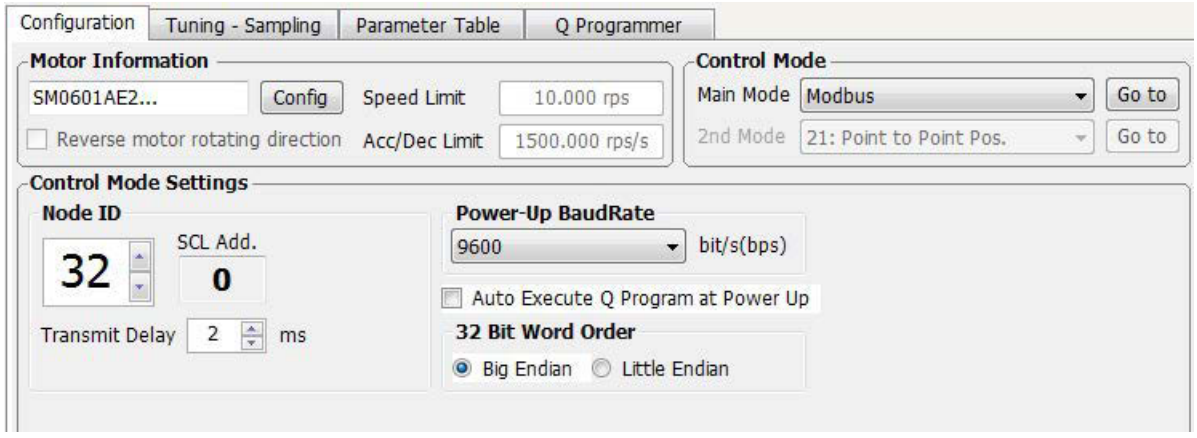

3. Sending Command

First Step:

Set velocity mode acceleration register as 40047 = 258h, deceleration register as 40048 = 4B0h, and velocity register 40049 = 960h.

Host Sending: 01 10 00 2E 00 03 06 02 58 04 B0 09 60 A0 9F

Drive Reply: 01 10 00 2E 00 03 E0 01

Command Message (Master)		
Function	Data	Number Of Bytes
Slave Address	01H	1
Function Code	10H	1
Starting Data Address	00H (High) 2EH (Low)	2
Number of Data (In word)	00H (High) 03H (Low)	2
Number of Data (In word)	06H	1
Content of first Data address 40047	02 (High) 58 (Low)	2
Content of second Data address 40048	04H (High) B0H (Low)	2
Content of third Data address 40049	09H (High) 60H (Low)	2
CRC Check Low	A0	1
CRC Check High	9F	1

Command Message (Slave)		
Function	Data	Number Of Bytes
Slave Address	01H	1
Function Code	10H	1
Starting Data Address	00H (High) 2EH (Low)	2
Number of Data (In word)	00H (High) 03H (Low)	2
CRC Check Low	70	1
CRC Check High	0D	1

Second Step : Command For Executing Point To Point Motion

Chapter 9.3.7 command Opode describes register 40125's control code. From the SCL code list shows that for JOG mode, it requires to write data 0x66 to register 40125 to start, and sending 0xD8 to register 40125 to stop.

SCL Command Encoding Table							
Function	SCL	Opcode	Parameter 1	Parameter 2	Parameter 3	Parameter 4	Parameter 5
Start Jogging	CJ	0x96	×	×	×	×	×
Stop Jogging	SJ	0xD8	×	×	×	×	×

Start

Host Sending: 01 06 00 7C 00 96 C8 7C

Drive Reply: 01 06 00 7C 00 96 C8 7C

Stop

Host Sending: 01 06 00 7C 00 D8 48 48

Drive Reply: 01 06 00 7C 00 D8 48 48

Starting message :

Command Message (Master)		
Function	Data	Number Of Bytes
Slave Address	01H	1
Function Code	06H	1
Starting Data Address	00H (High) 7CH (Low)	2
Content of Data	00 (High) 96 (Low)	2
CRC Check Low	C8	1
CRC Check High	7C	1

Command Message (Slave)		
Function	Data	Number Of Bytes
Slave Address	01H	1
Function Code	06H	1
Starting Data Address	00H (High) 7CH (Low)	2
Content of Data	00 (High) 96 (Low)	2
CRC Check Low	C8	1
CRC Check High	7C	1

Stopping Message:

Command Message (Master)		
Function	Data	Number Of Bytes
Slave Address	01H	1
Function Code	06H	1
Starting Data Address	00H (High) 7CH (Low)	2
Content of Data	00 (High) D8 (Low)	2
CRC Check Low	48	1
CRC Check High	48	1

Command Message (Slave)		
Function	Data	Number Of Bytes
Slave Address	01H	1
Function Code	06H	1
Starting Data Address	00H (High) 7CH (Low)	2
Content of Data	00 (High) D8 (Low)	2
CRC Check Low	48	1
CRC Check High	48	1

9.4 CANopen Communication

For C type drive, port CN6 and CN7 uses standard RJ45 (8p8c) design, customers can use CAT cables to build daisy chain networks.

9.4.1 RJ45 (8p8c) Pin Definitions

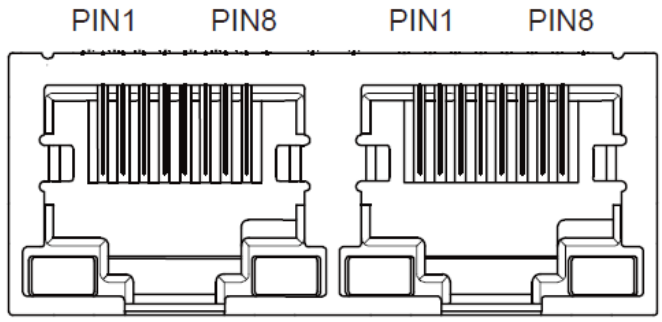

Pin definitions as follows:

PIN	Definition
1	CAN_H
2	CAN_L
3, 7	GND
6	CHGND
4, 5, 8	

9.4.2 CANopen NODE-ID

In the CANopen network, each of the drive needs to have a unique NODE-ID. For SV200 series AC servo drives, it allows you to set NODE-ID from 1-127, “0” cannot be used for ID setting.

Parameter P-80 (CO) can set NODE-ID for dives.

9.4.3 CANopen Communication Baud Rate

Parameter P-81 (CB) can set CANopen communication baud rate. For the CANopen drive, it supports 8 communication baud rates.

Setting value	communication baud rate	Setting value	communication baud rate
0	1M	4	125K
1	800K	5	50K
2	500K	6	25K
3	250K	7	12.5K

For more details, please refer to CANopen user manual which can be downloaded from the product page for your SV200 drive: http://www.applied-motion.com/products/servo-drives

9.5 Ethernet Communication

9.5.1 Connecting PC using Ethernet

Connecting SV200 Series Drive with PC requires following steps:

A. Physically connect the drive to the network (or directly to the PC). There are RJ45 connectors on the drive labeled CN6 and CN7.

B. Set the drive's IP address

C. Set the appropriate networking properties on the PC

D. Power up the Drive

Note: The following sections are taken from the "Host Command Reference - Appendix G: eSCL (SCL over Ethernet) Reference". For more information, please read the rest of the guide. It can be downloaded from Applied Motion Products website.

9.5.1.1 Setting the IP Address

The default IP address for SV200 series Ethernet address is 10.10.10.10

NOTE: For Dual Port ethernet models, only CN6 can be used as configuration port, CN7 can be used as dasiy chain communication port.

1. Addresses, Subnets, and Ports

Every device on an Ethernet network must have a unique IP address. In order for two devices to communicate with each other, they must both be connected to the network and they must have IP addresses that are on the same subnet. A subnet is a logical division of a larger network. Members of one subnet are generally not able to communicate with members of another unless they are connected through special network equipment (e.g. router). Subnets are defined by the choices of IP addresses and subnet masks.

If you want to know the IP address and subnet mask of your PC, select Start…All Programs… Accessories…Command Prompt. Then type "ipconfig" and press Enter. You should see something like this:

```
Windows IP Configuration

Ethernet adapter Local Area Connection:

        Connection-specific DNS Suffix  . :
        IP Address. . . . . . . . . . . . : 192.168.0.22
        Subnet Mask . . . . . . . . . . . : 255.255.255.0
        Default Gateway . . . . . . . . . : 192.168.0.254
```

If your PC's subnet mask is set to 255.255.255.0, a common setting known as a Class C subnet mask, then your machine can only talk to another network device whose IP address matches yours in the first three octets. (The numbers between the dots in an IP address are called octets.) For example, if your PC is on a Class C subnet and has an IP address of 192.168.0.20, it can talk to a device at 192.168.0.40, but not one at 192.168.1.40. If you change your subnet mask to 255.255.0.0 (Class B) you can talk to any device whose first two octets match yours. Be sure to ask your system administrator before doing this. Your network may be segmented for a reason.

2. Port setting

Ports are used to direct traffic to the right application once it gets to the right IP address. The UDP eSCL port in SV200 series drive is 7775. To send and receive commands using TCP, use port number 7776. You'll need to know this when you begin to write your own application. You will also need to choose an open (unused) port number for your application. Our drive doesn't care what that is; when the first command is sent to the drive, the drive will make note of the IP address and port number from which it originated and direct any responses there. The drive will also refuse traffic from other IP addresses that is headed for the eSCL port. The first application to talk to a drive "owns" the drive. This lock is only reset when the drive powers down.

If you need help choosing a port number for your application, you can find a list of commonly used port numbers at http://www.iana.org/assignments/port-numbers.

One final note: Ethernet communication can use one or both of two "transport protocols": UDP and TCP. eSCL commands can be sent and received using either protocol. UDP is simpler and more efficient than TCP, but TCP is more reliable on large or very busy networks where UDP packets might occasionally be dropped.

9.5.1.2 Connecting to Drive from PC

1. The default IP address for SV200 Ethernet drive is 10.10.10.10. It can be also viewed and configured directly from drive's control panel, parameter P-80(CO), please refer to 9.5.2 for more details.
2. To set the IP address of your PC:
    a. On Windows XP, right click on "My Network Places" and select properties.
    b. On Windows 7, click Computer. Scroll down the left pane until you see "Network". Right click and select properties. Select "Change adapter settings"
3. You should see an icon for your network interface card (NIC). Right click and select properties.
    a. Scroll down until you see "Internet Properties (TCP/IP)". Select this item and click the Properties button.
    b. On Windows 7 and Vista, look for "(TCP/IPv4)"
4. Select the option "Use the following IP address". Then enter the address "10.10.10.10". This will give your PC an IP address that is on the same subnet as the drive. Windows will know to direct any traffic intended for the drive's IP address to this interface card.
5. Next, enter the subnet mask as "255.255.255.0".
6. Be sure to leave "Default gateway" blank. This will prevent your PC from looking for a router on this subnet.
7. Because you are connected directly to the drive, anytime the drive is not powered on, your PC will annoy you with a small message bubble in the corner of your screen saying "The network cable is unplugged.

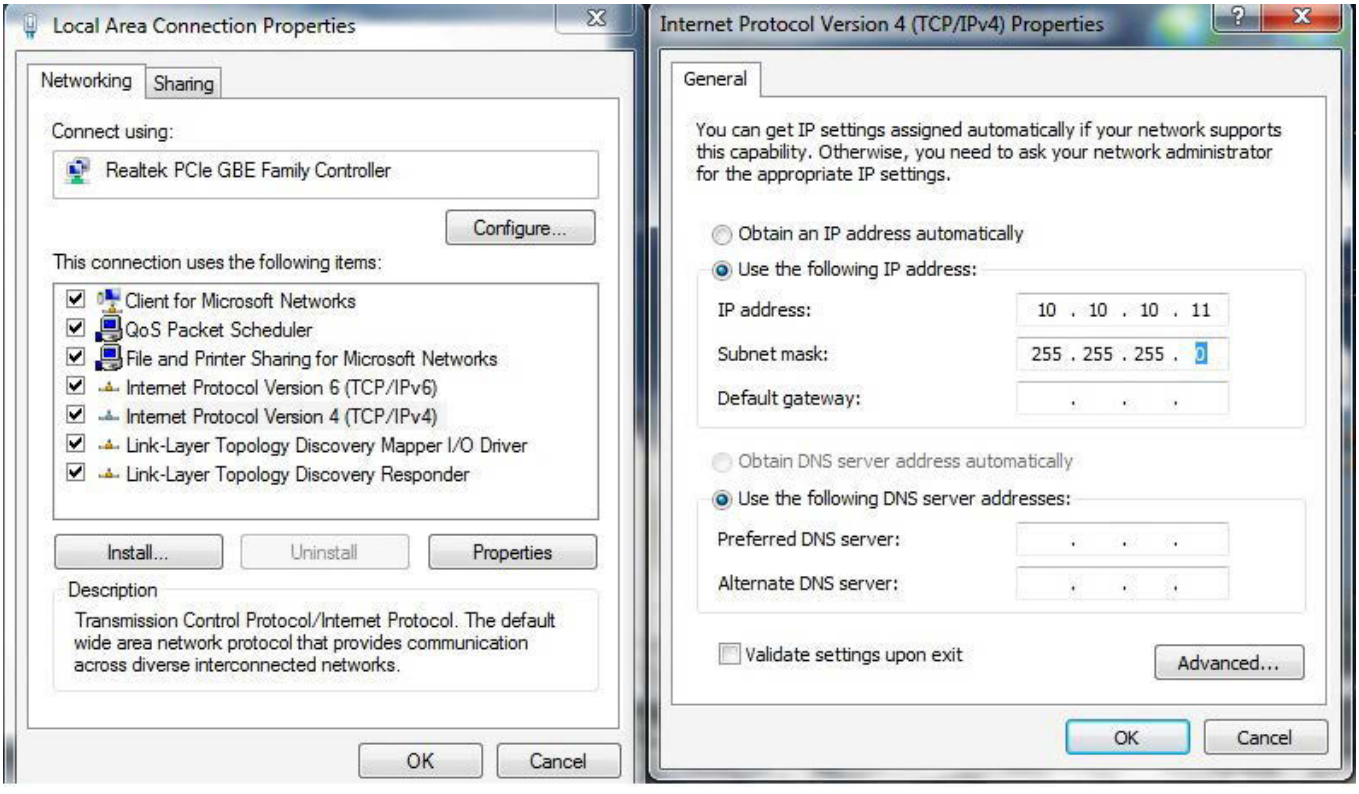

9.5.2 Select Driver's IP Address

9.5.2.1 SVX Servo Suite Software

1. Open SVX Servo Suite from your PC, and connect to the drive. You use the Ping function to check driver's communication status before click on the "Connect"
2. Upload the configuration from the Drive.

3. Under “Step 1: Configuration” -----“2. Control Mode”, select “SCL/Q (Stream Command) mode.
4. In “3. Control Mode Settings” select IP address index from drop down manual
5. Click “Download All to drive”

Note: the New IP address will only effect after next power cycle

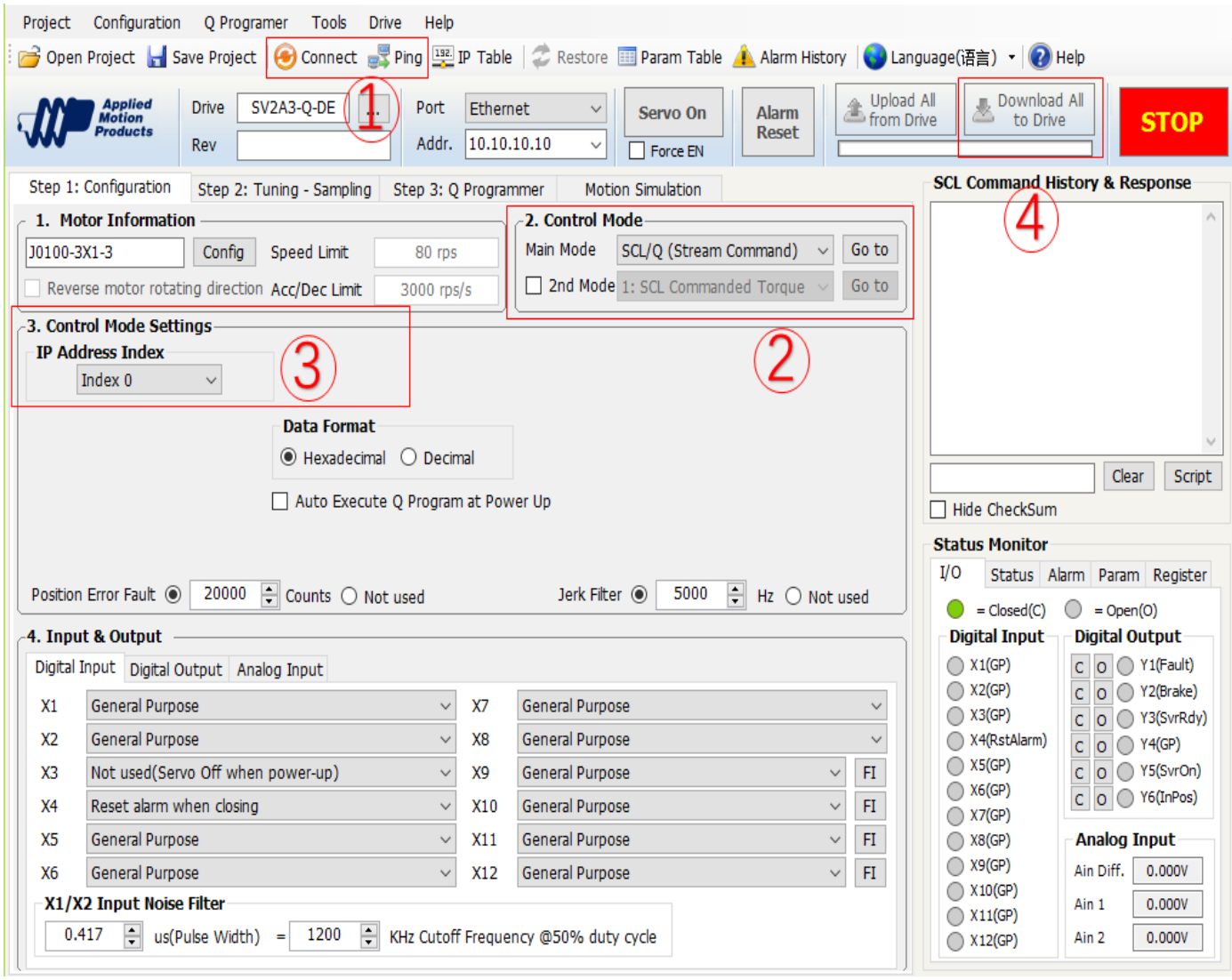

For SV200 series drives, there are 16 index values for 16 different IP addresses. Default address are as shown in table below:

Index	IP address	Index	IP address
0	10.10.10.10	8	192.168.0.80
1	192.168.1.10	9	192.168.0.90
2	192.168.1.20	A	192.168.0.100
3	192.168.1.30	B	192.168.0.110
4	192.168.1.40	C	192.168.0.120
5	192.168.0.50	D	192.168.0.130
6	192.168.0.60	E	192.168.0.140
7	192.168.0.70	F	DHCP

9.5.2.2 Set IP address from Drive

For Ethernet Version of SV200 Drive, IP address can be viewed and configurated directly from drive's control panel, parameter P-80(CO). Please refer to table below for parameter values and its IP address

P-80(CO)	IP address	P-80(CO)	IP address
0	10.10.10.10	8	192.168.0.80
1	192.168.1.10	9	192.168.0.90
2	192.168.1.20	A	192.168.0.100
3	192.168.1.30	B	192.168.0.110
4	192.168.1.40	C	192.168.0.120
5	192.168.0.50	D	192.168.0.130
6	192.168.0.60	E	192.168.0.140
7	192.168.0.70	F	DHCP

Configuration Steps:

Step	LED Display	Panel Control
1	0	
2	P00hP	In Status diplay mode, press and hold (M) three times to enter Parameter P mode
3	P80Co	Use ▼ or ▲ key to scroll, and find parameter P-80(CO)
4	1	Shot click on (S) to enter parameter edit mode
5	A	Use ▼ or ▲ key to change the parameter value
6	≡Et	Press and hold (S) (more than 1s) to set the parameter
7	F00FL.	Press and hold (M) to enter function control F mode
8	F04≡A.	Use ▼ or ▲ key to scroll, and find parameter F-04(SA)
9	bu≡y	Press and hold (S) (more than 1s) to save the parameter
10	F04≡A.	The new IP address will take effect at next power cycle

9.5.3 Editing IP address table

In SVX Servo Suit software IP table can be edited via the IP table tab.

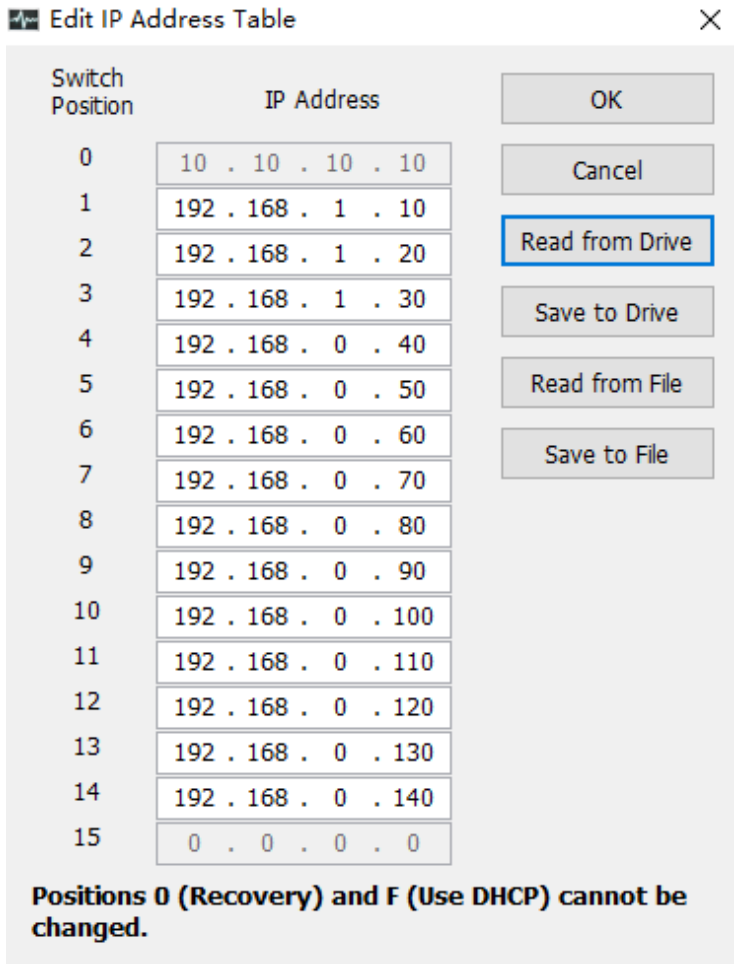

Read from Drive: IP the IP table from the connected drive

Save to Drive: Save current IP table values to the drive.

Read from File: Open a IP table configuration file from local PC

Save to File: Save a IP table configuration file to local PC

10 SV200 Tuning Guide

Like most modern servo drives, the SV200 series employs sophisticated algorithms and electronics for controlling the torque, velocity and position of the motor and load.

Feedback sensors are used to tell the drive what the motor is doing at all times. That way the drive can continuously alter the voltage and current applied to the motor until the motor meets the commanded torque, velocity or position, depending on the control mode selected. This form of control is called “closed loop control.”

One of the loops controls the amount of current in the motor. This circuit requires no adjustment other than specifying the maximum current the motor can handle without overheating.

The PID loop compares the intended motor position to the actual motor position as reported by the encoder. The difference is called error, and the PID loop acts on this error with three gain terms: the Proportional term, the Integral term and the Derivative term. The Acceleration Feedforward term is also added to achieve greater system control.

10.1 Servo Tuning – Adjustment of Gain Parameters

Servo tuning is used to optimize the servo system’s overall performance and reduce system response time. Servo tuning allows the servo motor to execute host control commands more precisely in order to maximize its system potential. Therefore, it is highly recommended that the gain parameters be optimized before actual system operation.

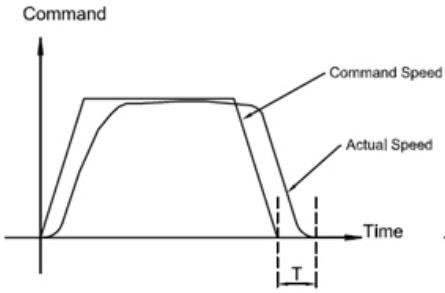

Actual speed differs from the command speed

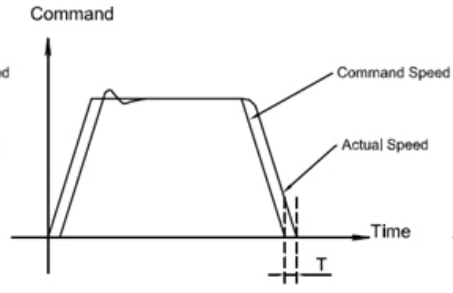

Changing the gain makes the motor more closely follow the command.

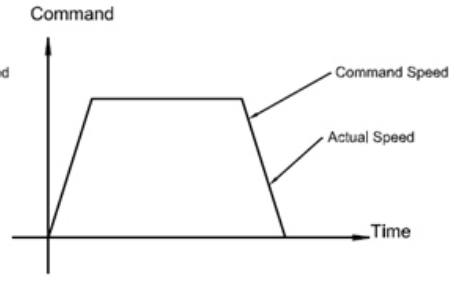

Fine tuning makes the actual speed match the command speed, achieving optimal machine performance.

The PID loop compares the intended motor position to the actual motor position as reported by the encoder. The difference is called error. The PID loop acts on this error with these three gain terms: Global gain (KP), Integrator Gain (KI), Derivative gain (KD).
In addition to the PID loop control, the SV200 series drives add a number of extra terms to enable greater system control. These additional terms include: position loop gain (KF), Damping gain (KV), Inertia feed forward gain (KK), Follow Factor (KL), Derivative filter gain (KE), and PID filter (KC).

In general, for systems having stiff mechanical transmissions, increasing the servo gain parameters will improve response time. On the other hand, for systems having more compliant mechanical transmissions, increasing servo gain parameters will potentially cause system vibrations and reduce system response time.

10.1.1 Gain Parameter Introduction

Global gain (KP):

This parameter is the primary gain term for minimizing the position error. It defines the system stiffness. Larger KP values means higher stiffness and faster response times. However, if gain values are too high, vibration can result. Values ranging from 6000 to 16000 are commonly used. In general, use default parameter values when possible.

Position loop gain (KF):

This parameter is also used for minimizing the position error. Increasing KF will increase stiffness and reduce settling time. However, increasing this gain term too much may cause system vibration.

Derivative gain (KD):

This parameter is used to damp low speed oscillations and increase system smoothness.

Integrator gain (KI):

This parameter minimizes (or may even eliminate) position errors especially when motor is holding position.

Damping gain (KV):

KV minimizes the velocity error and reduces vibration in position control mode.

Inertia Feedforward Constant (KK):

KK improves acceleration control by compensating for the load inertia.

Follow Factor (KL):

Higher values will reduce system noise and eliminate overshoot, but will reduce the system's dynamic following performance. Lower values will raise system stiffness, but may cause system noise.

Derivative Filter Gain (KE):

The differential control parameters filter frequency. This filter is a simple one-pole, low-pass filter intended for attenuating high frequency oscillations. This value is a constant that must be calculated from the desired roll off frequency.

PID Filter gain (KC):

The servo control overall filter frequency. This filter is a simple one-pole, low-pass filter intended for attenuating high frequency oscillations. The value is a constant that must be calculated from the desired roll off frequency.

Among all the parameters, changes for KP, KE, and KC are NOT recommended after system configuration. Therefore, parameter tuning is based more on KF, KD, KV, KI, KL and KK.

10.2 Auto-Tuning

SV200 servo systems can achieve real time response to the dynamic feedback of the load and optimize tuning parameters automatically. The auto-tuning function can save time and simplify the debugging process. Auto-tuning can be completed using the SVX Servo Suite software in only a few minutes.

NOTE: Auto-Tuning must operate with the load installed.

10.2.1 Step 1: Select Motor

Before using the auto-tuning, make sure the motor configuration is correct.

On the SVX Servo Suite "**Configuration**" panel in the "**Motor Information**" section, click on "**Config**" (shown below)

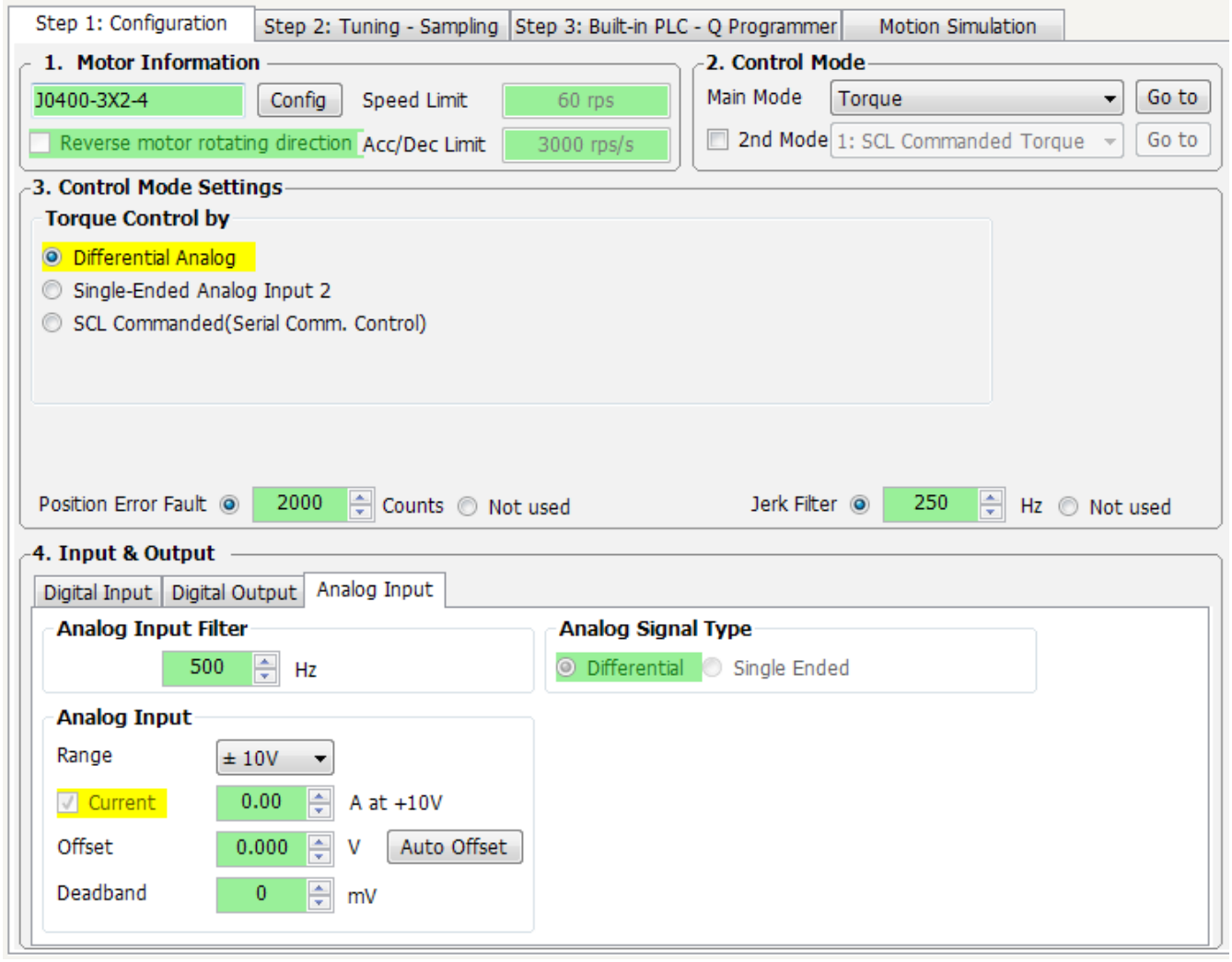

In the pop-up menu, click on the drop-down motor list to choose the correct motor number and then click "**OK**".

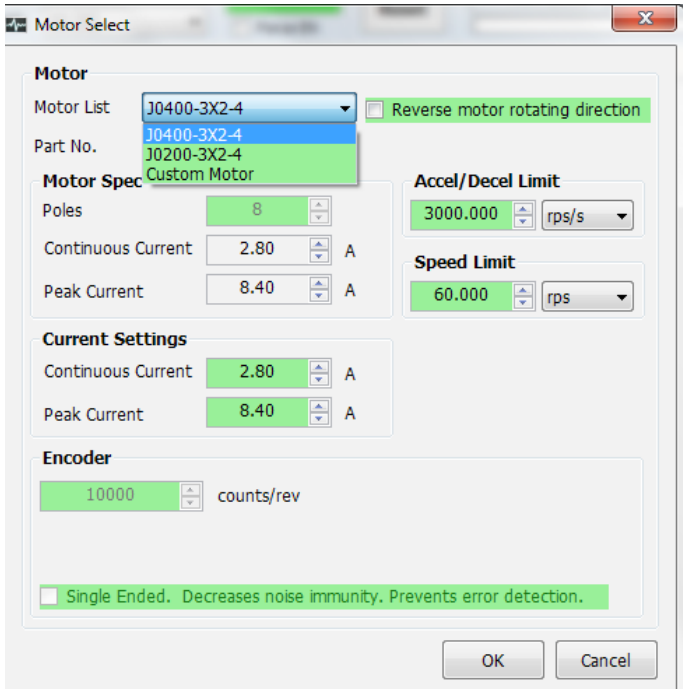

NOTE: Refer to the SV200 Series AC Servo User Manual, Chapter 2.3 Servo Motor Model Introduction for motor identification details.

10.2.2 Step 2: Setting the Software Position Limits

The Software Position Limit function uses encoder counts to set "soft" limits at user-defined locations that can then be used during the tuning process. These position limits ensure that the motor will ONLY rotate between the CCW and CW limits, which will help to prevent accidental system damage. This is especially useful when the motor is coupled to a linear actuator, for instance.

NOTE: The software Position Limits will ONLY be effective during current power-up operation and will not be saved to non-volatile memory for use at the next drive power up. Therefore, DO NOT rely on these software limits during actual system operation. Refer to LP and LM commands in SVX SVX Servo Suite's built-in Q Programmer help for more details.

On the "**Tuning- Sampling**" panel, select the "**Limit**" tab to setup software position limits. If software position limits are not required, then click "**Clear Limit**" and go to the next step for the "**Auto-Tune**" function description.

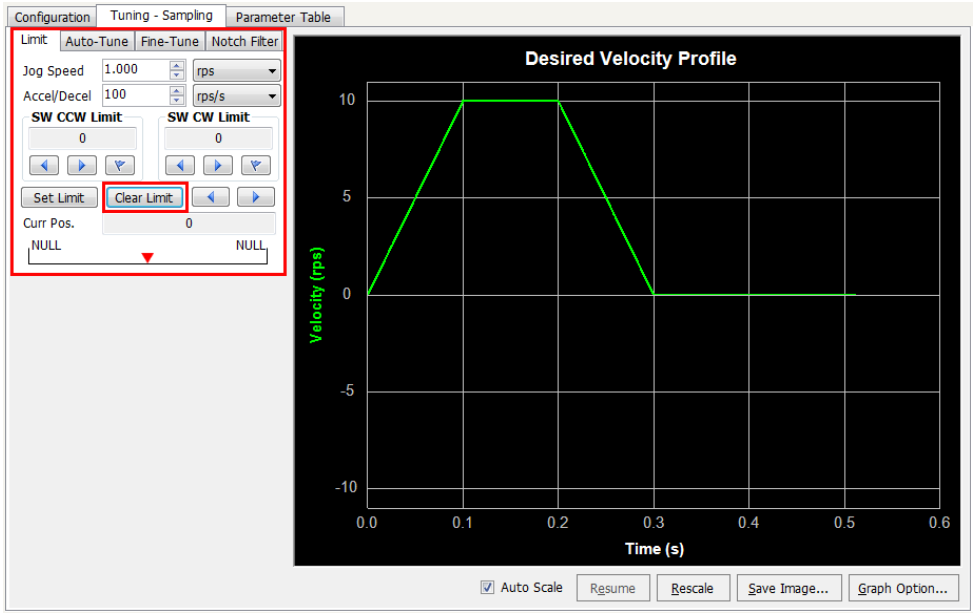

Setup Software Position Limits

Here are the basic steps to set the soft limits, also shown below:

A. Before rotating the motor and setting limits, first set the desired Jog Speed, and Accel/Decel rate.

B. Set CCW limit – move to desired position with arrow buttons, then click the flag button

C. Set CW limit – move to desired position with arrow buttons, then click the flag button

D. Confirm or Cancel position limits set in step B and C with the Set Limit or Clear Limit buttons

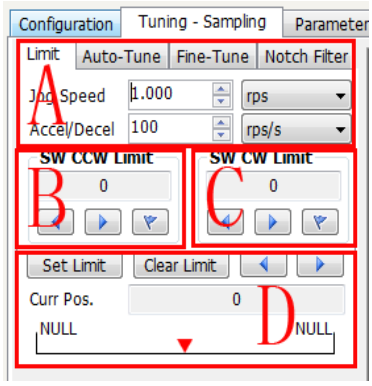

Detailed Steps for Software Position Limit

Step	Operation	Software
1	Make sure Servo is Enabled Click ◀ or ▶ to rotate motor in CCW or CW direction When target position reached, click ⚑ to accept and store position	
2	Same process as above	
3	Confirm position limits Click on Set Limit **NOTE: CW limit must be larger than CCW limit.**	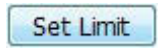
4	Setting complete	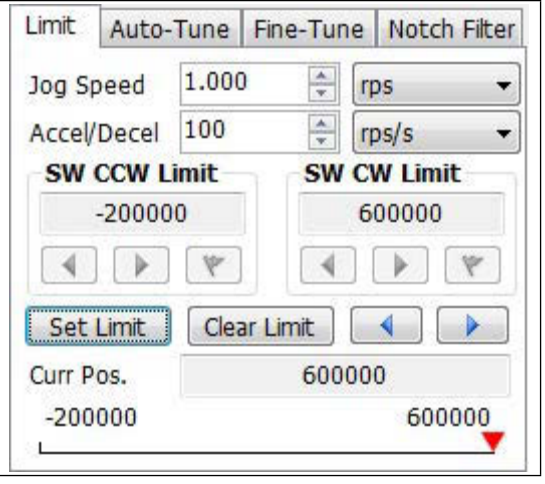

10.2.3 Step 3 Auto-Tuning Function

From the "**Auto-Tune**" tab, follow these steps to configure and run auto-tuning:

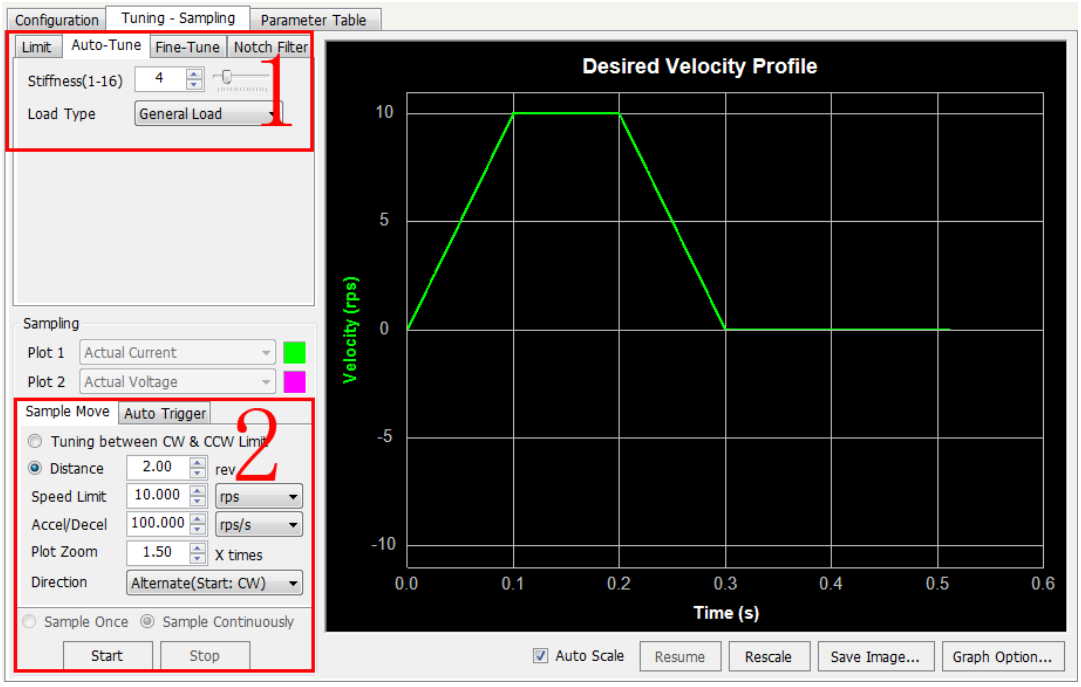

Operation steps

1	Set Stiffness and Load type	
2	Set Auto-Tuning Distance, Speed target, and Accel/Decel **NOTE:** If software position limit is set, select "Tuning Between CW and CCW Limit If no limit is required, select "Distance" (ensure software position limits have been cleared)	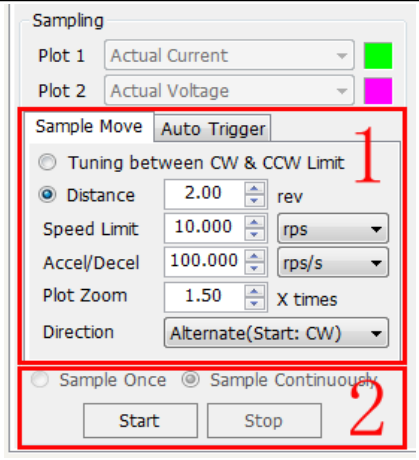
3	Click **Start** to start the auto-tuning function	
4	When Auto-Tuning is complete, download parameters to the drive	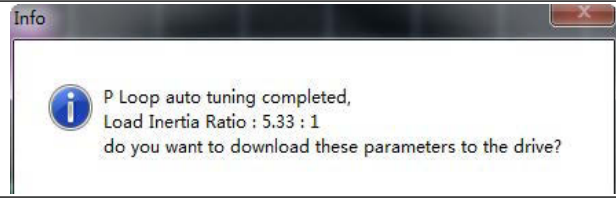

NOTE: During the tuning process, motor or load vibrations may occur. This is normal and the system will correct itself.

For customized performance requirements, use fine tuning functions.

10.3 Fine tuning

Depending on the mechanical system characteristics and the servo motor used, the following parameters are available and may need to be adjusted to improve system performance:

- Global gain (KP)
- Position loop gain (KF)
- Derivative gain (KD)
- Damping gain (KV)
- Integrator Gain (KI)
- Inertia feed forward gain constant (KK)
- Derivative filter gain (KE)
- PID filters (KC)

This step should be completed only after the **Auto-Tune** function has been done and if improvements are needed for the tuning. A sample move can be defined and run once for each click of the Start button or continuously to facilitate real-time dynamic tuning (i.e. adjustment of gains and filter settings while the motor is moving).

Among the parameters listed above, changes to Global gain (**KP**), Derivative filter gain (**KE**) and PID filter (**KC**) are NOT recommended after the system has been configured with the **Auto-Tune** function. Therefore, parameter adjustments during the fine tuning phase should be limited to Position loop gain (**KF**), Derivative gain (**KD**), Damping gain (**KV**), Integrator Gain (**KI**), Inertia feed forward gain constant (**KK**). See details below.

However, if you experience mechanical resonance or hear high-pitched squealing noises, you can lower the PID Output Filter below the natural frequency of your system so that the PID output does not excite the resonance.

If you have a large inertial load, you'll probably find that you (or the auto-tuner) need to set the gain parameters high, especially PP and KI, to get good response. Then you will want to increase the damping to prevent ringing. Now the system is likely to be so tight that if you have a springy, all metal coupling it may "buzz" or "squawk". Reducing the frequency of the derivative filter can remove this objectionable sound.

10.3.1 Position loop gain (KF)

This parameter is the primary gain term for minimizing the position error. Increasing KF will increase stiffness and reduce settling time. However, it might cause vibration if increased too much. This is simplest part of the PID loop; the drive will apply current to the motor in direct proportion to the error. Because the current controls the torque output from the motor, increasing this gain will increase the magnitude of torque in direct proportion to the position error. Here's an example: if the motor were standing still, and you suddenly turned the shaft by hand, you'd want the drive to increase the motor current so that it goes back into position. The further you disturb the motor from its target position, the more the torque will increase.

As shown below, if KF is small, position error will be high at all times (during acceleration, constant velocity, and deceleration)

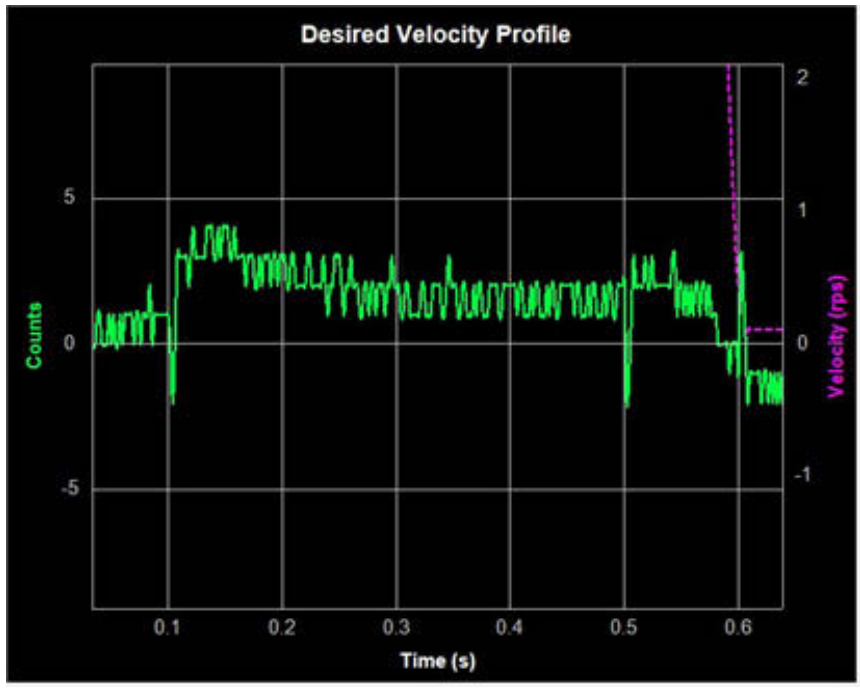

As shown below, if the KF value is set appropriately, the position error during acceleration and deceleration will settle very quickly, and position error of ±1 count can be achieved during constant velocity as well as when the motor comes to rest at its target position.

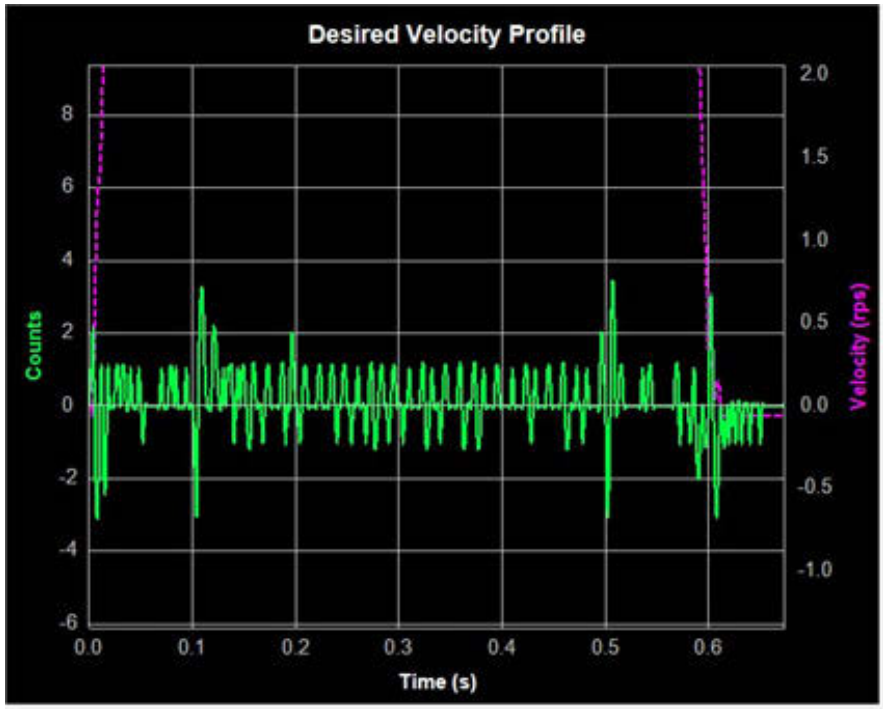

10.3.2 Integrator Gain (KI)

The position loop gain (KF) alone will often not be enough to give the best performance in terms of minimizing the position error and may require a long time settling time. In these cases, the Integral gain (KI) will keep adding up that error and continue to increase the torque until the motor truly returns to the target position.

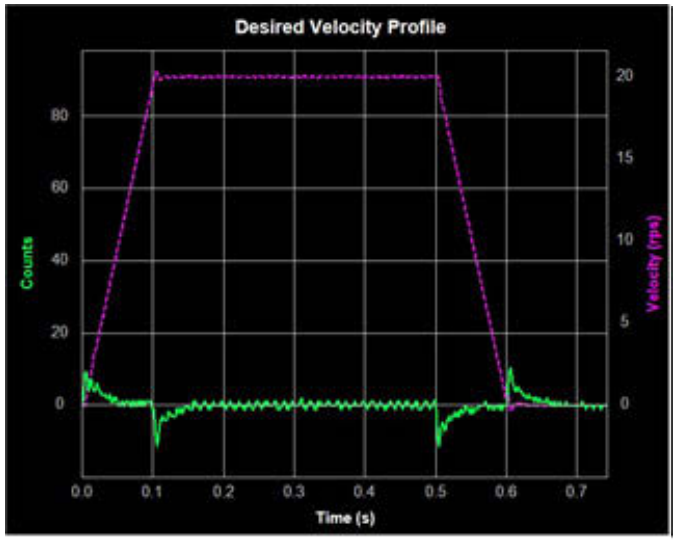

KI=200

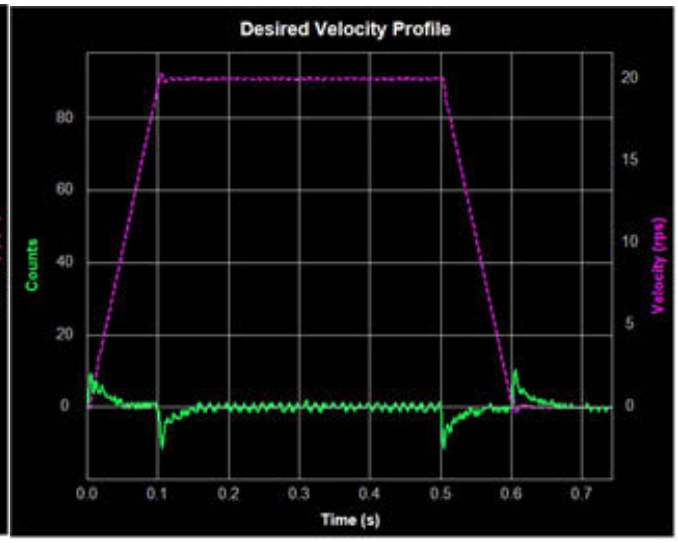

KI=500

As seen below, if KI is too large, the whole servo system will vibrate and make noise. This, in turn, will increase the position error and may greatly extend settling time due to system oscillations around the target position.

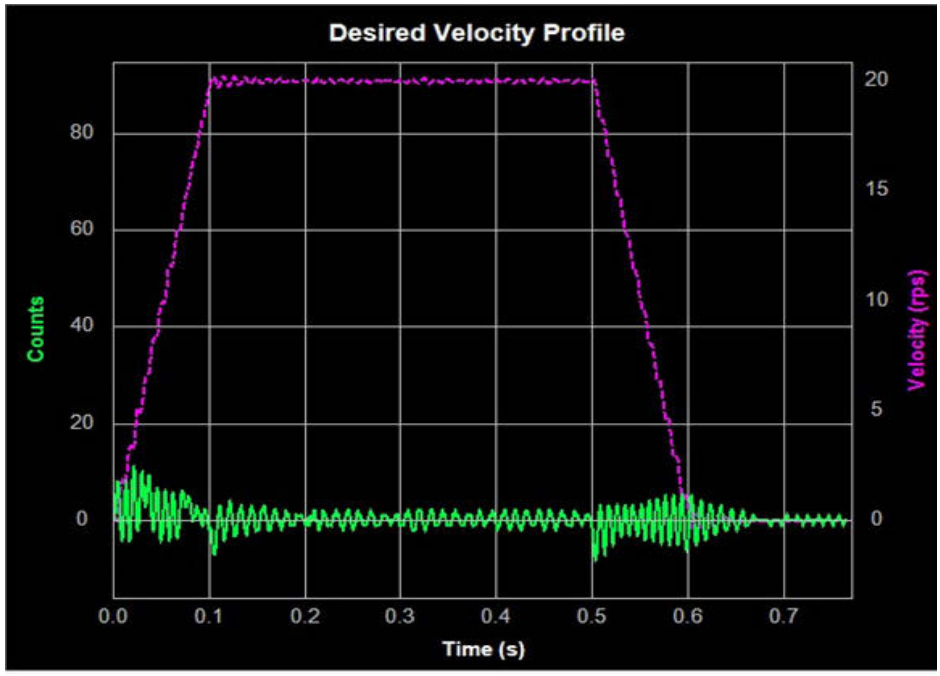

10.3.3 Damping gain (KV)

As the motor load inertia increases, the servo system will require higher damping gain (KV) to reduce position errors during constant speed and when the motor stops.

When KV is too small, this low damping value will cause large position error fluctuations while the motor is running at constant velocity and while stopped, holding position. As the next chart shows, an increasing amount of position error occurs during constant velocity and when stopped. These oscillations seen on the graph will result in motor and system vibration, as well as audible noise.

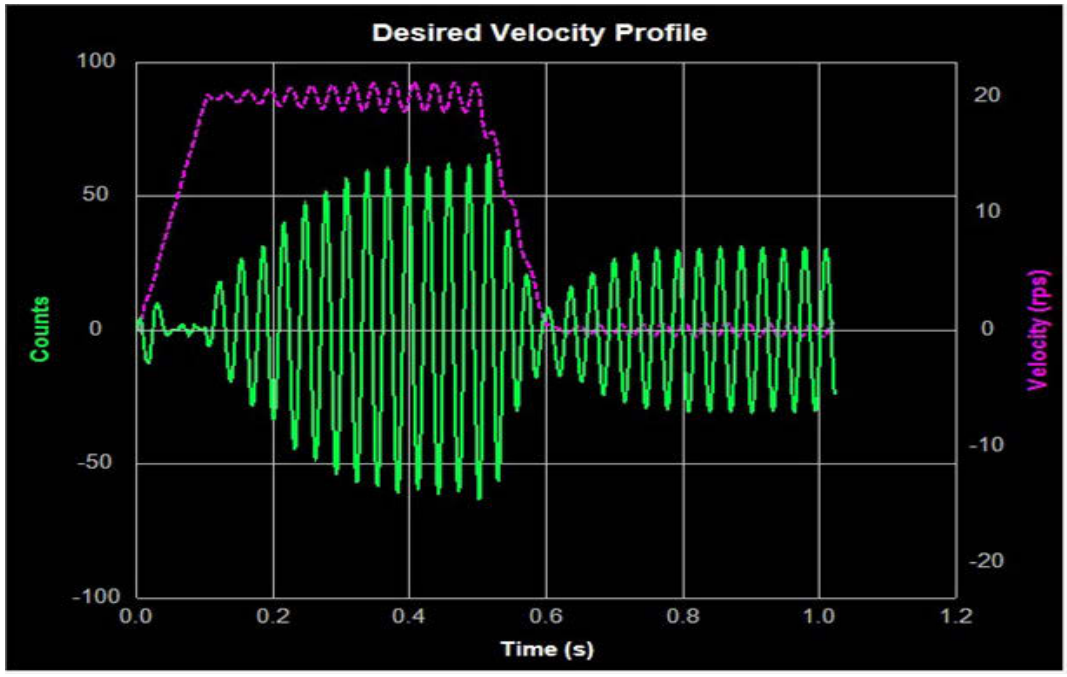

As seen below show, the position error is reduced as KV increases.

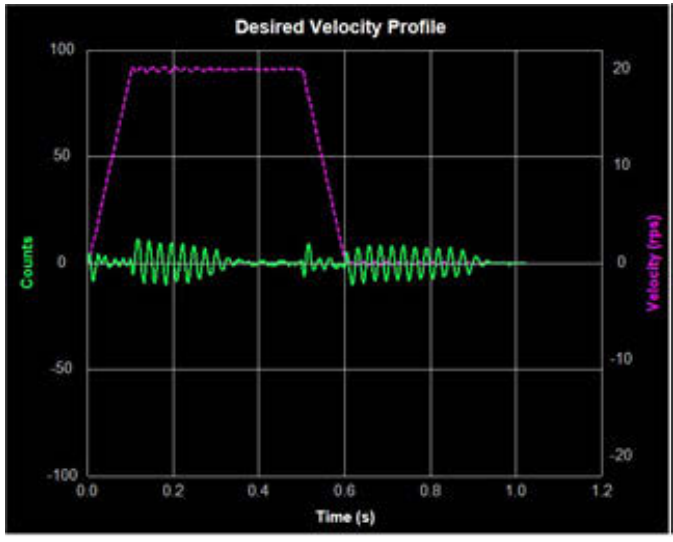

KV=10000

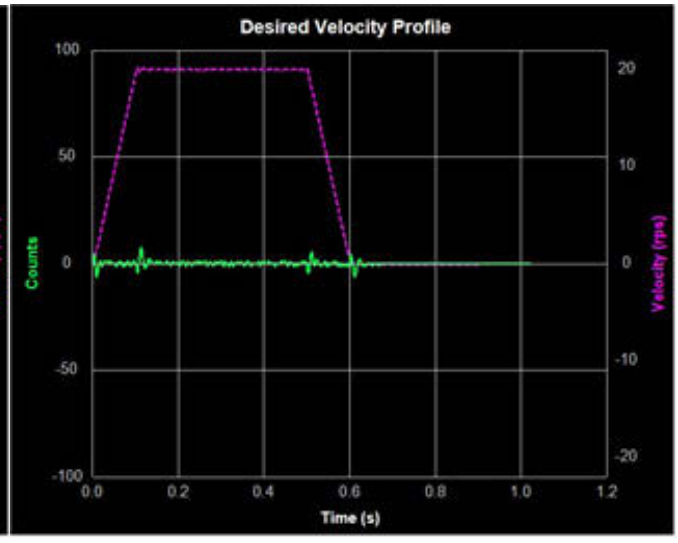

KV=16000

When KV is too large, however, the strong damping gyellow below:

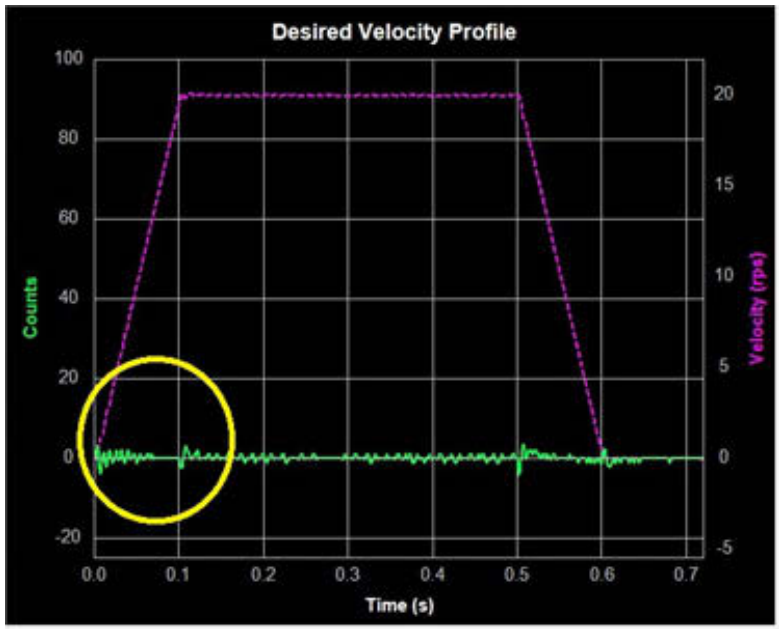

KV = 32000 (too large)

10.3.4 Derivative gain (KD)

A simple PI controller without Derivative gain (KD) would cause the motor to overreact to small errors, creating ever larger errors and, ultimately becoming unstable. If you knew what the motor was going to do before it did it, this behavior could be prevented. When pulling a car into a garage, for example, most people do not wait until the car is fully into the garage before stepping on the brakes. Instead, most people slow down as they see the distance between them and their objective get smaller.

A motor drive can control a motor better if it examines the rate of change of the position error and includes that in its torque calculation. So, as the position error decreases, the torque commanded to the motor can be reduced with the appropriate KD setting. In the example shown below, when KD is small, the system does not settle quickly after changes in the move profile. Instead, the response indicates that the motor is oscillating around the target position that is being defined throughout the move profile.

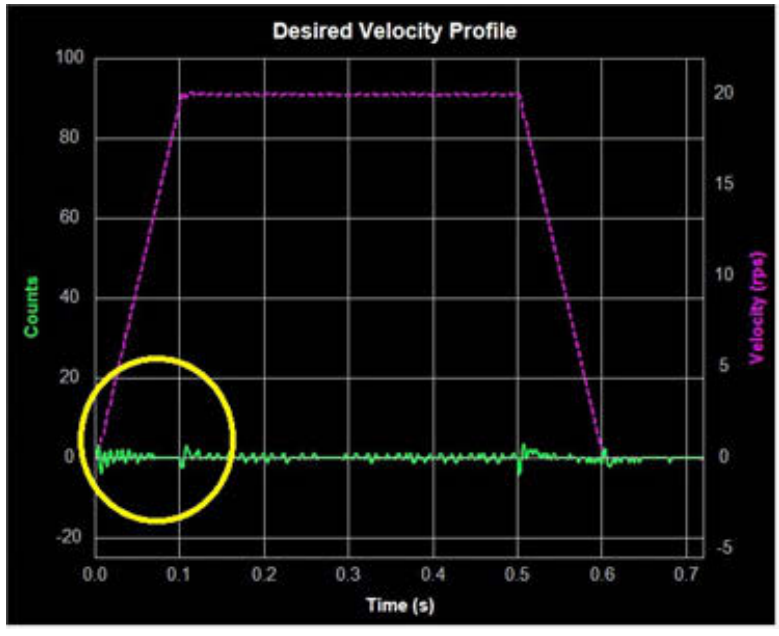

KD = 3000 (too small)

As KD increases, the system takes less time to settle as shown below.

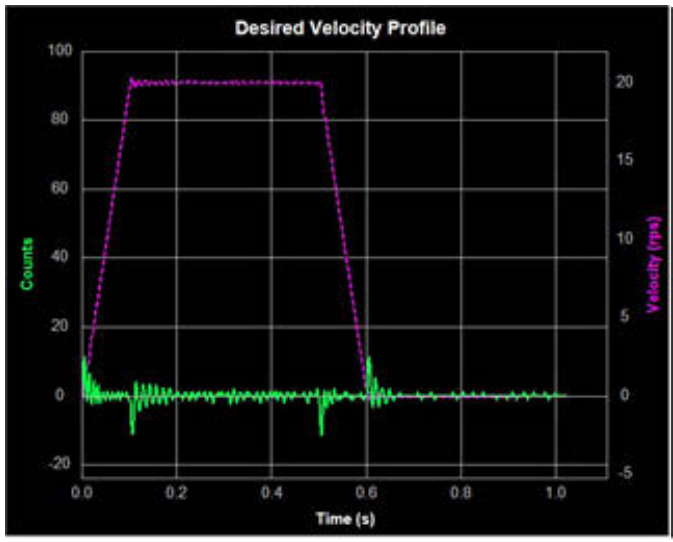

KD=4000

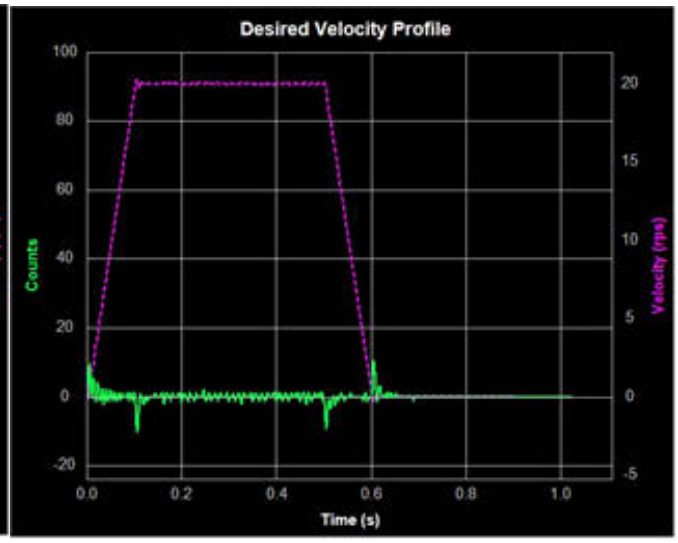

KD=7000

When KD is too large, however, the system will become highly sensitive to the commanded changes in motion, which can potentially cause unexpected system vibrations and noise as shown below.

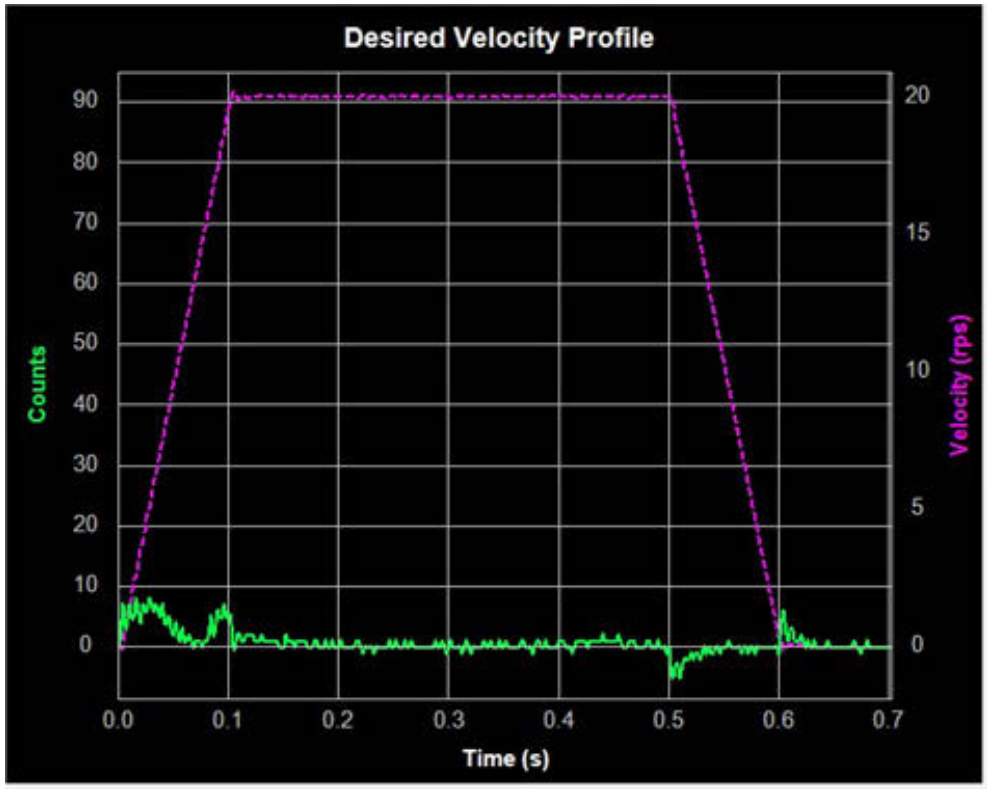

KD = 15000 (too large)

10.3.5 Inertia Feedforward Constant (KK)

With larger loads typically comes larger load Inertia. These larger inertias can be more easily accelerated or decelerated by anticipating the control system needs. The Acceleration Feedforward gain term (KK) does this by adding an acceleration value to the control value, which reduces position error during acceleration and deceleration.

When KK is small, the feedforward constant will not be enough to effectively reduce position error. This will cause undesirable effects on the system's dynamic performance during the acceleration and deceleration. The result will be larger position error and longer settling time as shown below.

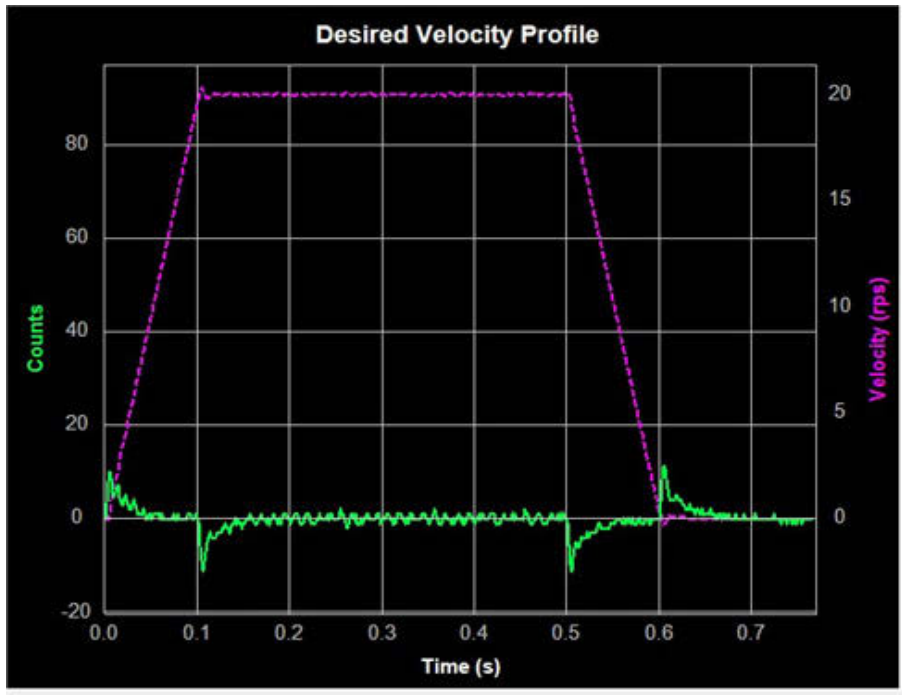

KK = 2000(too small)

As shown below, as KK increases, the system's dynamic performance improves. The position error during acceleration and deceleration is reduced significantly as a result.

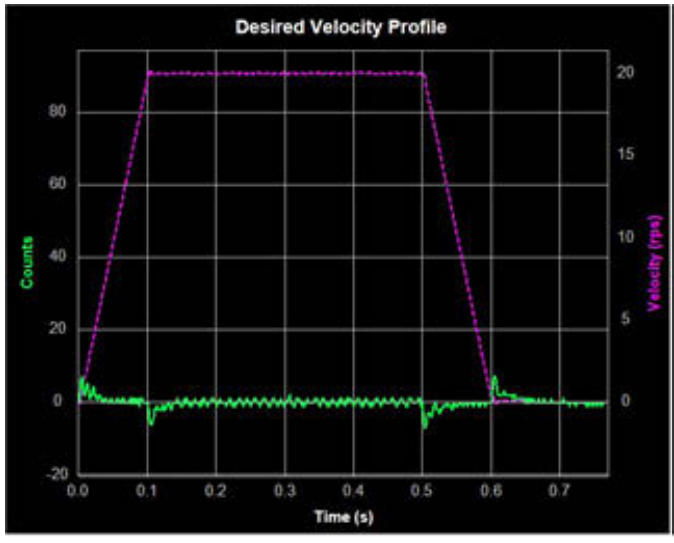

KK= 4000

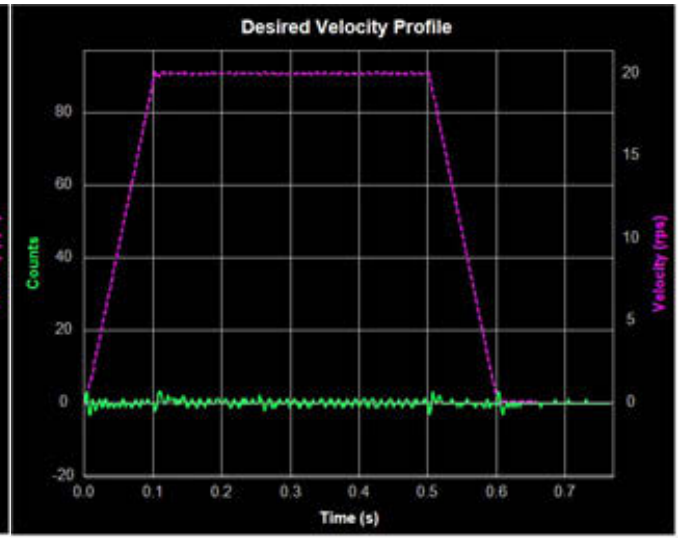

KK=11000

When the feedforward (KK) gain is too large, however, the opposite effect can be seen. This will also decrease system dynamic performance by increasing position error and system settling time, as shown below.

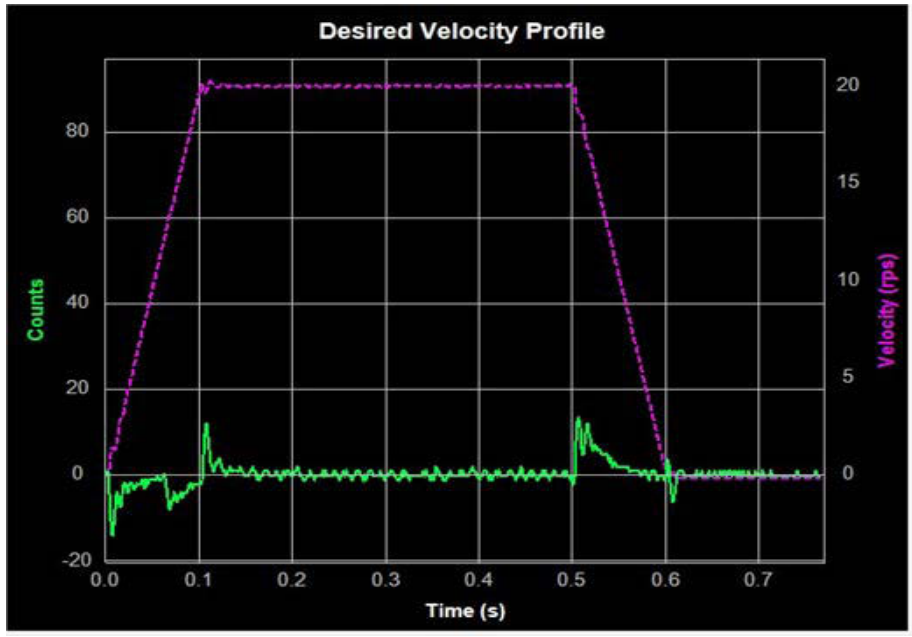

KK=19000 (too large)

NOTE: When adjusting control loop gain values remember that the Feedforward Term (KK) has no effect when operating in the Position – Pulse & Direction Control Mode.

10.3.6 Follow Factor (KL)

A larger Follow Factor (KL) value will reduce system noise and eliminate overshoot, but will reduce the system's dynamic following performance. Lower values will increase system stiffness, but may cause system noise as shown below (Green = Actual Speed; Purple = Position error).

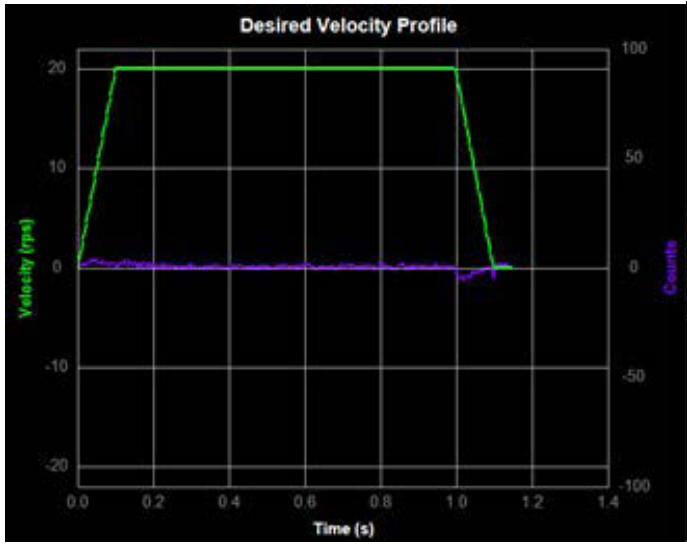

KL=0

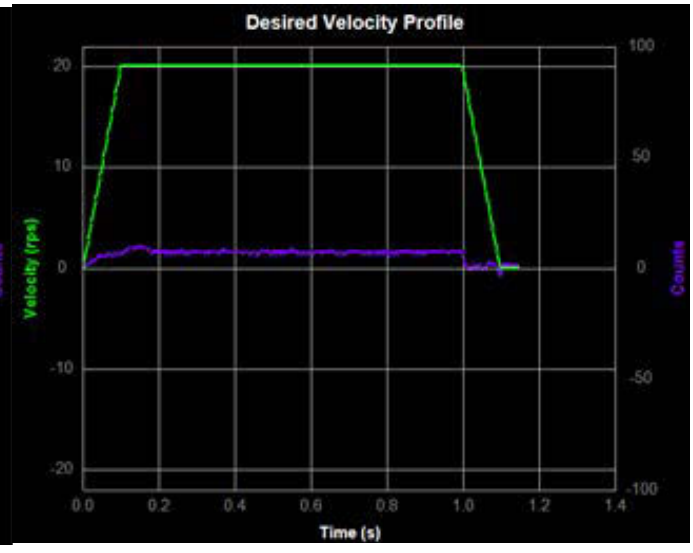

KL=2000

10.4 Using Auto Trigger Sampling

In cases where an external controller is used to perform move profiles, such as in **Position**

Control Mode using **Pulse & Direction** input, the **Auto Trigger** function will allow the **Sampling** tool to collect data and display the move profile.

This sampling technique is different in that it is not triggered by the start of a move profile as the drive cannot know when the move is actually started (remember the controller is external). Instead, the **Auto Trigger** function waits for a predefined set of conditions, or triggering event, before the move profile data is collected.

When using **Auto Trigger**, it's important to first select the conditions that will trigger the sampling. Begin by selecting the desired trigger value in the **Plot 1** list. This selection is what is monitored by the Auto Trigger; **Plot 2** will be displayed, but is not monitored for scope triggering purposes. See below.

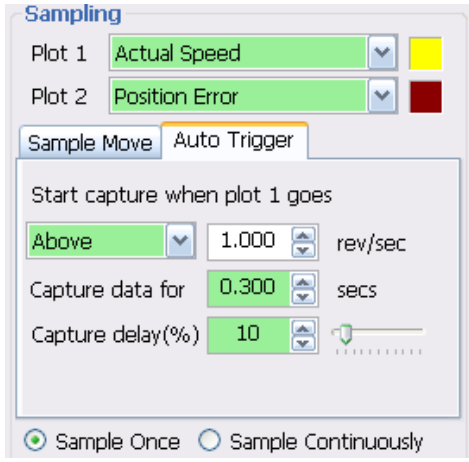

In the Auto Trigger tab the displayed text will indicate the value to be used and the condition that will trigger the capture of the selected data plots. In the example above, the capture will begin when **Actual Speed** is **Above 1.000 rev/sec**, the capture will **Capture data** for **0.300 seconds** and there will be a **10% Capture delay** from the beginning of the capture to the trigger point. The **Capture delay** allows viewing of the data prior to the trigger point so that a more complete profile can be observed.

When changing **Plot 1** to other selections notice that the units for the capture trigger will change with it. For example, when selecting **Position Error** the capture will look at **Counts** for determining the trigger point.

Sample Once: when the **Start** button is clicked, the servo drive begins continuous collection of data. It will constantly check the data to see if the value meets the capture trigger conditions. At the same time SVX Servo Suite monitors the status of the servo drive to detect if the capture is complete.

When the capture is complete the data is displayed in the profile window.

Sample Continuously: when the **Start** button is clicked, the capture is repeated each time the trigger condition is met until the **Stop** button is clicked. During continuous sampling the tuning gains can be changed at any time and will be updated automatically. This allows for more dynamic adjustment of the gains, thereby speeding up the tuning process.

11 STO Function

11.1 Operation and maintenance procedures

11.1.1 The replacement of components

The replacement of components with a limited life is different , Disassembling for inspection and repair should be carried out only by authorized dealers or service company. The Components as following:

Components	Standard replacement cycles /year
motor	Life time varies depending on working conditions.
Drive	Life time varies depending on working conditions.
Connector kit	Life time varies depending on working conditions.
STO terminal	Life time varies depending on working conditions.

11.1.2 Preventing hazardous event

Even while the STO function is working, the following potential safety hazards exist.

Check safety in risk assessment. The actions and constraints necessary to prevent and /or reduce the consequences of a hazardous event, including:

1.) The motor may move when external force (e.g. gravity force on vertical axis) is exerted on it. Provide an external brake, etc.,

2.) The STO turns off the current to the motor but does not turn off power to the servo driver and does not isolate it. When starting maintenance service on the servo driver,turn off the driver by using a different disconnecting device.

3.) When using STO function, connect equipment conforming to the safety standards.

4.) Do not touch the motor shaft or anything connected to it when working .

11.1.3 Maintenance procedures of STO faults or failures

If during maintenance or inspecttion the STO function is found to be not working, please contact Applied Motion Products for support.

11.1.4 Commissioning and testing

The STO Terminal block is MOONS'standard plug, generally do not pull out from the drive.

When connecting the STO to a host controller, please use the appropriate connector or consulting MOONS'customer representative.

11.2 The implementation of Safe Torque off

11.2.1 Safety Functional Specification

During the normal operation, if the STO is activated, the drive will provide an alaram signal.

11.2.1.1 Safety input Signal

STO Safety input Signal as following:

Signal	Symbol	Pin No.	contents	Control mode
Safety input 1	SF1+	1	When SF1 input turns off, the STO function activate	Compatible all control mode
	SF1-	2		
Safety input 2	SF2+	3	When SF2 input turns off, the STO function activate	
	SF2-	5		

Note: When safety input SF1 or SF2 is OFF, STO function activate.

11.2.1.2 External device monitor (EDM)output signal

The monitor output signal is used by the external device to monitor the state of the safety input signal. Connect the monitor output to the external device monitor terminal of the safety devices such as safety controller and safety sensor.

Signal	Symbol	Pin No.	contents	Control mode
EDM Output	EDM+	6	When STO function work, The monitor output signal EDM may used	Compatible all control mode
	EDM-	4		

11.2.1.2 +5VDC Source

Your dirve was shipped with pre-wired STO connector that allow the drive to operate without external STO signals. If you plan to operate your drive without STO functionality, leave this pre-wired connector in place.

The pre-wired connector works by connecting the SF1 + and SF2+ signals to the drive's internal +5VDC power supply and by connecting SF1- and SF2- to the drive's internal GND.

Signal	Symbol	Pin No.	contents	Control mode
Digit	DGND	7,8	DGND	Compatible all control mode
+5V	+5VDC	9,10	+5VDC output	

11.2.2 The fault reaction function

The safe torque off (STO) function is a safety function that shuts off the motor current and motor output torque by forcibly turning off the driving signal of the servo driver internal power transistor

11.2.3 Response time

The response time of each safety related function and of the associated fault reaction function, is shown in the timing chart below:

11.2.3.1 Operating timing chart for safety status

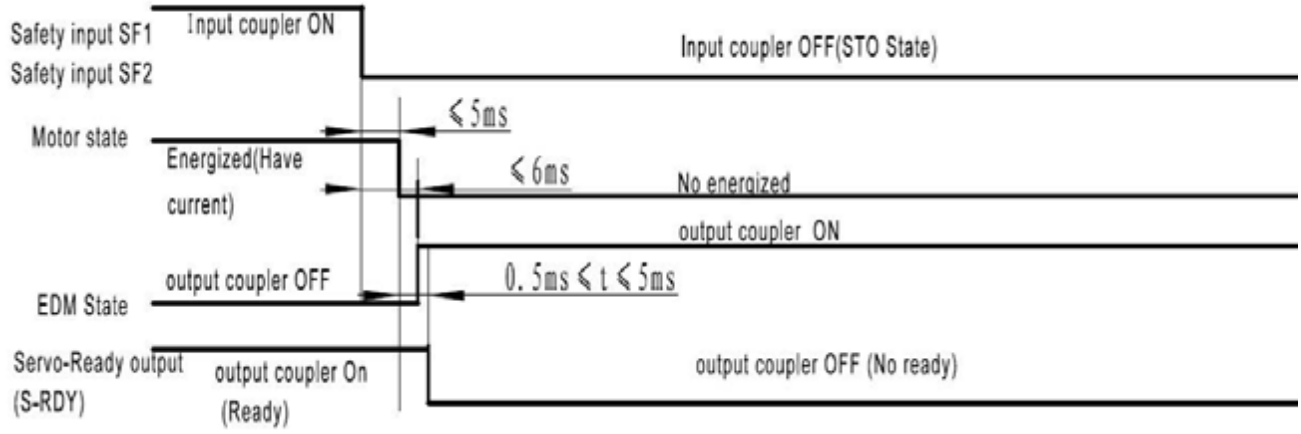

11.2.3.2 Return timing from safety state:

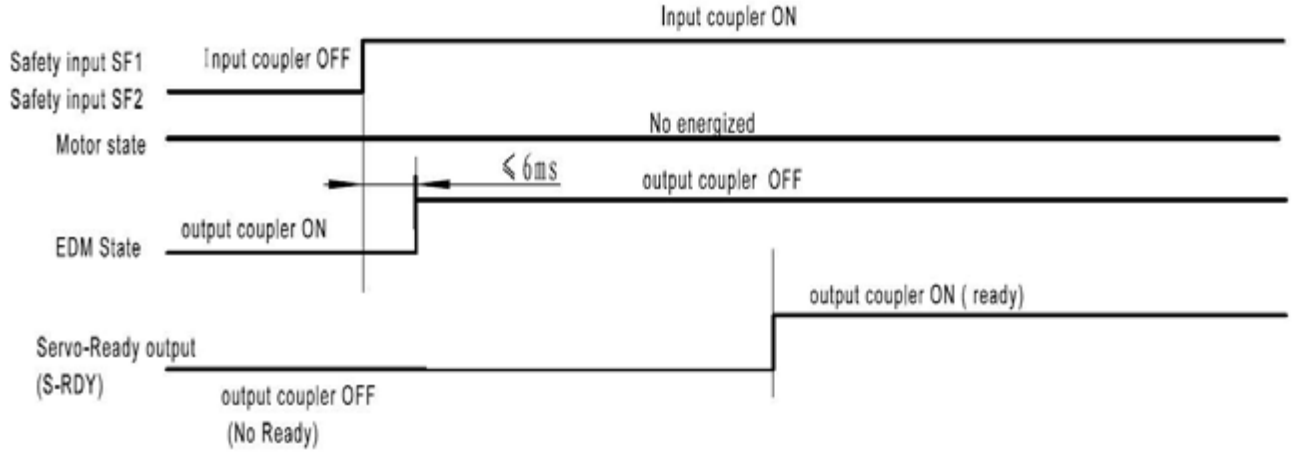

11.2.4 11.2.4 Safety function activated or prohibit

In high demand or continuous operation mode the STO function is activated or disabled state

11.2.5 11.2.5 STO function as the highest priority.

The STO function has the highest priority of all drive safety features. Other safety features include over current, over voltage, over temperature, end of travel limits etc.

11.3 The safety integrity information

The safety integrity information for each safety function, including, the SIL capability and the PFH value.

The SIL/SIL capability 2 and PFH=1.41e-09/H

11.4 The environmental and operating conditions for safety function

11.4.1 The environmental and operating conditions

Safety function is intended to be used as follows:

Item	Conditions
Ambient temperature	0-50℃ (free from freezing)
Ambient humidity	20% - 85%(free from condensation)
Storage humidity	93%(free from condensation)
Storage temperature	-20℃ - 65℃
Altitude	Lower than 1000m
Vibration	1g, 10-150HZ(Do not continuously use the driver for along time at the resonance point.)
EMC	Refer to standard EN61800-3 C2 category

Note: Extreme temperatures are permissible only for short periods such as during transportation.

11.5 Safety function constraints

11.5.1 Failure rate

The failure rates is calculated for an ambient temperature of 50C max.

11.5.2 Mission time and proof test

proof test intervals: 20 years, as appropriate

mission time: 20H each day, as appropriate

11.5.3 Testing, calibration or maintenance requirements

The testing, calibration or maintenance requirements must be performed by a qualified technician.

11.5.4 11.5.4 Avoiding systematic failure

1.) Be sure the STO work in reasonable environment

2.) Be sure the machine brake is functioning correctly

3.) Be sure the motor works normally

4.) Make sure safety input cables status are wired correctly

11.5.5 SIL capability

The SIL capability of STO is 2

11.5.6 Identify the hardware and software configuration

Identify the hardware: When STO function is activated, a drive hardware circuit is triggered, and the current flow to the motor is terminated which prevents the motor from producing torque. The drive is disabled. STO is a kind of hardware level safety protection device, to protect the safety of people and equipment in an emergency.

Identify the software: when STO Function activates the PWM drive signal is shut down by the hardware to shut off the motor current, at the same time, the drive LED displays alaram code 

When failure occurs, you should check the safety input wiring and terminal block if loose or damaged, or contact Applied Motion Products.

11.6 The installation and commissioning guidance

11.6.1 Installation

We have made the best effort to ensure the highest quality, however the presence of an exceptionally large external EMC disturbance may result in unexpected action. It is highly recommended that you make a fail-safe design and secure the safety in the operative range. For the drive installation. You may refer to the 3.4 chapter. STO safety function should be connected as following.

11.6.1.1 Example of connection to safety switch

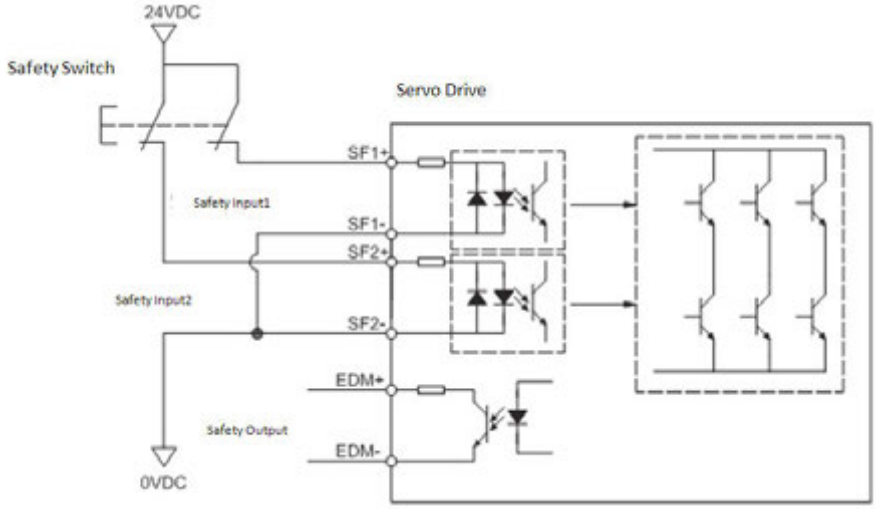

11.6.1.2 Example of connection to safety Light Curtain

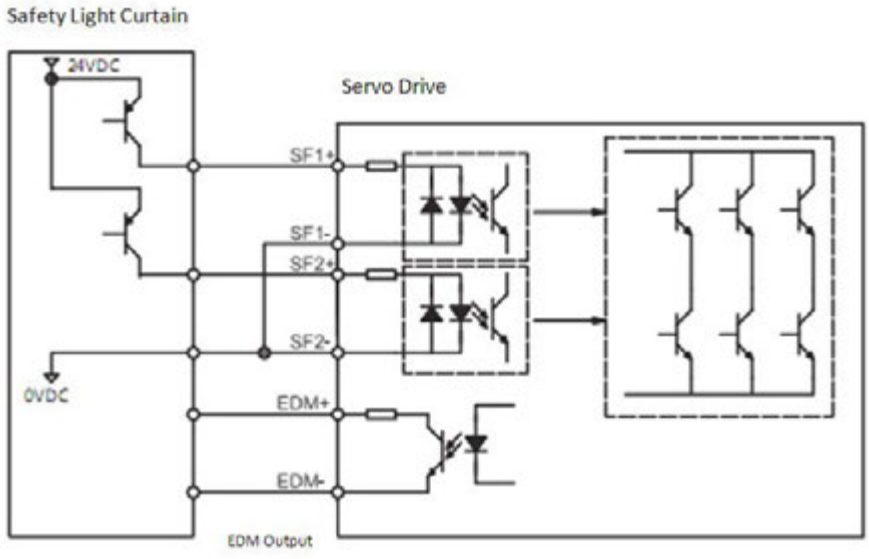

Note: the EDM output, must be limited to 24VDC(max), 100mA(max), limit current as necessary.

11.6.2 commissioning

1. Be sure the drive is properly earth grounded to avoid electric shock and malfunction.
2. Please use the STO safety-related function in a Vibration-free environment.

11.7 Requirements for safety functions configuration test

11.7.1 Inspection Requirments

Generanl and normal running condition, annual average is 30, Perform the daily and periodical inspection as per the items below.

Type	Cycles	Items to be inspected
Daily inspection	daily	1. Ambient temperature and humidity 2. Main circuit voltage 3. Damage of the cables 4. Pinching of foreign object at the load 5. Loose connection or misalignment between the motor and machine or equipment.
Annual inspection	1 year	1. Loose tightening 2. Trace of overheat 3. Damage to STO terminal block 4. SF1 safety input circuit function 5. SF2 safety input circuit function

11.7.2 Safety relevant parameters and their values

Parameter	Actual value
PFH	1.41e-09/H
MTTFd	High
CCF (for EN ISO 13849)	95
CCF (for IEC 61508)	49
Category	3
DC	Low
SFF	67.645%
HFT	1
Beta Factor	2%
PL	d
The SIL/SIL capability	2

11.7.3 The test procedures of safety functions

Logical relation between safety input signal and EDM output signal

Signal	Symbol	Photocoupler logic			
Safety input	SF1	ON	ON	OFF	OFF
	SF2	ON	OFF	ON	OFF
EDM output	EDM	OFF	OFF	OFF	ON

1. Safety input SF1, SF2 are OFF, and the photocoupler in EDM output circuit is ON.

2. Monitoring the logics (all 4 states) of photocoupler shown in the table above, the external device can determine the status (normal or abnormal) of safety input circuit and EDM output circuit., make sure the safety function is normal.

11.7.4 The description of the safety related components

1.) The safety related components that will be used in the application, including software versions which including STO function abnormal alarm.

2.) To avoid EMC disturbance the drive need to be connected to an external EMI filter, please contact Applied Motion Products for filter recommendations.

3.) STO Terminal block is important in application.

12 Trouble Shooting

12.1 Drive Alarm List

LED display	Description	Alarm type	Drive status after alarm occurs
r01ot	Drive over temperature	Fault	Servo off
r02ur	Internal voltage fault	Fault	Servo off
r03uH	Over voltage	Fault	Servo off
r04HC	Over current	Fault	Servo off
r05LC		Fault	Servo off
r06rC		Fault	Servo off
r08Hb	Bad hall sensor	Fault	Servo off
r09Eb	Encoder error	Fault	Servo off
r 10PL	Position error	Fault	Servo off
r 11Lu	Low voltage	Fault	Servo off
r 12ou	Velocity limited	Warning	No change to drive's staus
r 13Lt	CW limit or CCW limit activated	Warning	No change to drive's staus
r 14cL	CW limit is activated	Warning	No change to drive's staus
r 15cL	CCW limit is activated	Warning	No change to drive's staus
r 16CL	Current limit	Warning	No change to drive's staus
r 17CE	Communication error	Warning	No change to drive's staus
r 18EF	Parameter save failed	Warning	No change to drive's staus
r 19LP	Phase loss of the main circuit	Warning	No change to drive's staus
r20to	STO is activated	Warning	Servo off
r21rF	Regeneration failed	Warning	No change to drive's staus
r22uH	Low voltage	Warning	No change to drive's staus
r239E	Q program is empty	Warning	No change to drive's staus
r24dd	Move when the drive is disabled.	Warning	No change to drive's staus

12.2 Drive alarm troubleshooting

LED display	Description	Alarm type	Processing method
r01ot	Drive over temperature	Temperature of the heat sink or power device has been risen over the specified temperature. (90°C)	1. Improve the ambient temperature and cooling condition. 2. Increase the capacity of the driver and motor. Set up longer acceleration/deceleration time. Lower the load
r02ur	Internal voltage fault	Drive internal voltage failure.	1. Please check supply power voltage 2. Please replace the drive with a new one, and contact customer service
r03uH	Over voltage	Drive DC bus volatage is too high 110V series : 220V 220V series : 420V 1. Power supply voltage has exceeded the permissible input voltage. 2. Disconnection of the regeneration discharge resistor 3. External regeneration discharge resistor is not appropriate and could not absorb the regeneration energy. 4. Failure	Measure the voltage between lines of connector (L1, L2 and L3). 1. Enter correct voltage. 2. Measure the resistance of the internal regeneration resistor. 3. please measure the external resistor, Replace the external resistor if the value is ∞. 4. Please contact customer service or replace the driver with a new one.
r04HC r05LC r06rC	Over current	1. Failure of servo driver (failure of the circuit, IGBT or other components) 2. Short of the motor wire (U, V and W) 3. Burnout of the motor 4. Poor contact of the motor wire. 5. Input pulse frequency is too high. 6. Motor is over load, command output torque is larger than specificed torque, for a long operating time. 7. Poor gain adjustment cause motor vibration, and abnormal nosie. 8. Machine has collided or the load has gotten heavy. Machine has been distorted. 9. Welding of contact of dynamic braking relay due to frequent servo ON/OFF operations.	1. Turn to Servo-ON, while disconnecting the motor. If error occurs immediately, replace with a new driver. 2. Check that the motor wire (U, V and W) is not shorted, and check the branched out wire out of the connector. Make a correct wiring connection. 3. Measure the insulation resistance between motor wires, U, V and W and earth wire. In case of poor insulation, replace the motor. 4. Check the balance of resistor between each motor line, and if unbalance is found, replace the motor. 5. Check the loose connectors. If they are, or pulled out, fix them securely. 6. Adjust gain value settings. 7. Measuring brake voltage 8. Check drive and motor encoder and power wires. 9. please contact customer service.
r08Hb	Bad hall sensor	Hall sensor fault	1. please check encoder connection 2. please check your drive motor configurations.
r09Eb	Encoder error	Encoder signal fault	please check encoder connection.
r10PL	Position error	Position error value exceeds the position error range set by parameter P-44 (PF).	1. Please check parameter P-44 (PF). 2. Please check drive gain value settings. 3. Please check the load factor of the regeneration resistor, increase the capacity of the driver and the motor, and loosen the deceleration time

r 11Lu	Encoder error	1. Drive bus voltage lower than 90VDC power failure has occurred 2. Lack of power capacity...Power supply voltage has fallen down due to inrush current at the main power-on. 3. Failure of servo driver (failure of the circuit)	Measure the voltage between lines of connector and terminal block L1,L2,L3. 1. Increase the power capacity. Change the power supply. 2. please check connections between L1,L2,L3. Please refer to 4.1.5 drive power connection 3. please contact customer service
r 12ou	Position error	Motor rotary velocity exceeds parameter P-20 (VM) setting value.	Please check motor velocity command if it is within the P-20 (VM) range. 1. Avoid high velocity command 2. Check the command pulse input frequency and division/multiplication ratio. 3. Make a gain adjustment when an overshoot has occurred due to a poor gain adjustment. 4. Make a wiring connection of the encoder as per the wiring diagram.
r 13Lt	CW limit or CCW limit activated	CW and CCW limit is ON	1. External limit switch is triggered. 2. Check x5 and x6 limit settings, please refer to chapter7.1.3 Cw/ccw limit.
r 14cL	CW limit is activated	CCW limit triggered	1. External limit switch is triggered. 2. Check x5 and x6 limit settings.
r 15cL	CCW limit is activated	CW limit triggered	
r 16CL	Current limit	Driver's output current exceeds setting value P-18 (CP) 1. Load was heavy and actual torque has exceeded the rated torque and kept running for a long time. 2. Oscillation and hunching action due to poor gain adjustment. Motor vibration, abnormal noise. 3. Machine has collided or the load has gotten heavy. Machine has been distorted.	1. Make a gain re-adjustment. 2. Increase the capacity of the driver and motor. Set up longer acceleration/deceleration time. Lower the load. 3. Check motor wirings for U/V/W as red/yellow/bule.
r 17CE	Communication error	Drive and host communication error.	Please check wiring connection, and drive's communication address and baud rate setting.
r 18EF	Parameter save failed	Saving parameter failure.	1. Please try to save again. 2. if problems is not solved, please contact MOONS
r 19LP	Phase loss of the main circuit	---	---
r20to	STO is activated	Safty torque off function is activated. Either or both safety input 1 or 2 is ON.	Please confirm safety input 1 and 2 wiring configuration. Please check Safety sensor setting.
r2 1rF	Regeneration failed	Regenerative energy has exceeded the capacity of regenerative resistor. 1. Due to the regenerative energy during deceleration caused by a large load inertia, converter voltage has risen, and the voltage is risen further due to the lack of capacity of absorbing this energy of the regeneration discharge resistor. 2. Regenerative energy has not been absorbed in the specified time due to a high motor rotational speed.	1. Internal resistor value is smaller than required, cannot absorb the regeneration energy. 2. Please check external regeneration resistor connections. 3. Reduce rotary velocity and decrease acceleration and deceleration value.

r22u8	Low voltage	Drive bus voltage lower than 110V series : 110VDC 220V series : 200VDC 1) Power supply voltage is low. Instantaneous power failure has occurred 2) Lack of power capacity...Power supply voltage has fallen down due to inrush current at the main power-on. 3) Failure of servo driver (failure of the circuit)	1) Increase the power capacity. Change the power supply. 2) Please check I1, I2, I3 power connections, please refer to 4.1.5 P1 drive power connection. 3) please contact moons.
r239E	Q program is empty	Drive in Q mode, but Q program is empty.	1. Please check Q program. 2. Please check operation mode correction. 3. Please check Q program coding, make sure no faults to stop the program running.
r24dd	Move when the drive is disabled.	Motion command is received while motor is disabled.	Please enable the motor, and send the command again.

13 Appendix

13.1 Appendix 1: LED Character Reference

				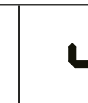	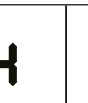				
1	2	3	4	5	6	7	8	9	10
									
A	B	C	D	E	F	G	H	I	J
		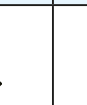			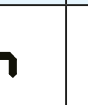				
K	L	M	N	O	P	Q	R	S	T
		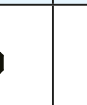							
U	V	W	X	Y	Z				

13.2 Appendix 2: Accessories

13.2.1 Mating Connectors

Description	Manufacturer	Manufacturer number
Mating I/O Connector & Shell (Included)	TYCO	5-2232346-1
Mating Motor Power Connector (Included)	JST	06JFAT-SBXGF-I
Mating AC Power Connector (Included)	JST	05JFAT-SBXGF-I
Plastic Spring release Lever (included)	JST	J-FAT-OT
Mating STO connector (Included)	MOLEX	43025-1000
Mating STO connector Pins (Included)	MOLEX	43025-0005
Mating Motor Feedback Connector (NOT Included)	TYCO	3-2232346-1

13.2.2 Servo Motor Power Cable (Recommended)

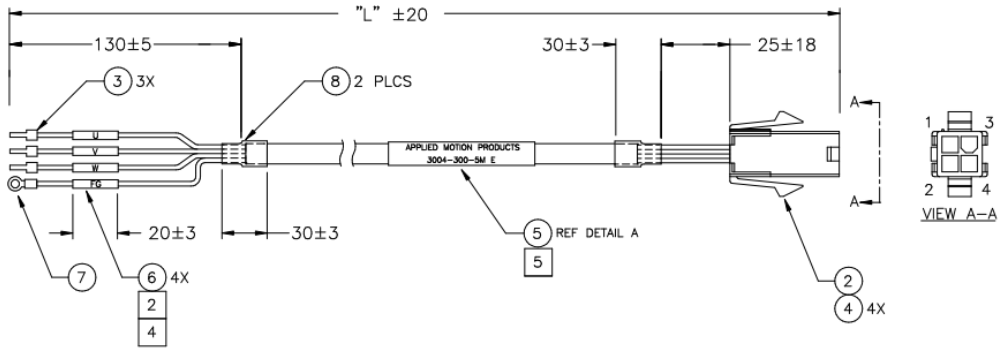

Model Number	Description
3004-300-1M	Servo Motor Power Cable, 1 meter
3004-300-3M	Servo Motor Power Cable, 3 meter
3004-300-5M	Servo Motor Power Cable, 5 meter
3004-300-10M	Servo Motor Power Cable, 10 meter

Flex Rated Cables

Model Number	Description
3004-306-1M	Flex rated Servo Motor Power Cable, 1 meter
3004-306-3M	Flex rated Servo Motor Power Cable, 3 meter
3004-306-5M	Flex rated Servo Motor Power Cable, 5 meter
3004-306-10M	Flex rated Servo Motor Power Cable, 10 meter

13.2.3 Servo Feedback Cable (Recommended)

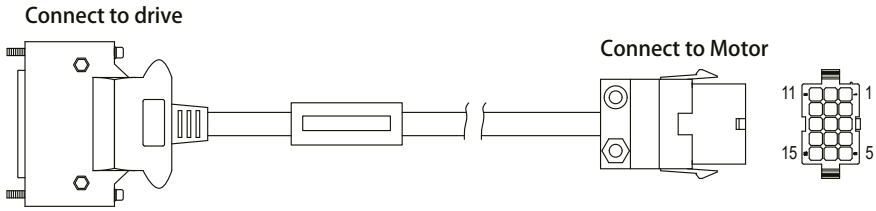

Model Number	Description
3004-304-1M	Servo Motor Feedback Cable, 1 meter
3004-304-3M	Servo Motor Feedback Cable, 3 meter
3004-304-5M	Servo Motor Feedback Cable, 5 meter
3004-304-10M	Servo Motor Feedback Cable, 10 meter

Flex Rated Cables

Model Number	Description
3004-305-1M	Flex rated Servo Motor Feedback Cable, 1 meter
3004-305-3M	Flex rated Servo Motor Feedback Cable, 3 meter
3004-305-5M	Flex rated Servo Motor Feedback Cable, 5 meter
3004-305-10M	Flex rated Servo Motor Feedback Cable, 10 meter

13.2.4 I/O Accessories (Not Included)

I/O Cable with Flying Leads

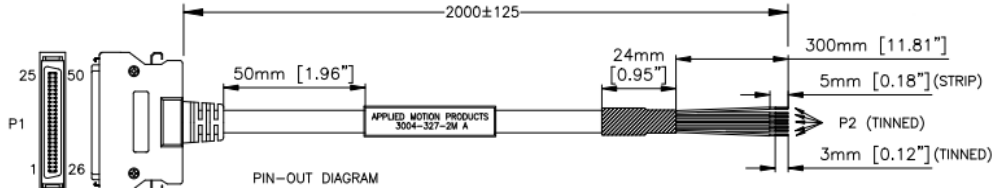

Model Number	Description
3004-327-2M	2 meter I/O Flying Leads cable

Breakout Board for SV200 I/O Connector



Model Number	Description
Bob-4	DIN rail-mountable I/O breakout board with 0.5m Extension Cable

This page intentionally left blank

This page intentionally left blank

Contacting Applied Motion Products

Corporate Headquarters

404 Westridge Drive

Watsonville, CA 95076

(800) 525-1609

(831) 761-6555

web www.applied-motion.com

support@applied-motion.com