BXA10 Series

Single and dual output

- **1 x 2 x 0.395 inch package with stand-offs**
- **13.3 Watts/in³ power density**
- **CISPR22 and EN55022 conducted emission level A**
- **UL, CSA and VDE approvals (48V input only)**
- **Continuous short circuit protection**
- **Optional remote ON/OFF**

The BXA10 series of DC/DC converters, comprising 7 different models, is designed for a wide range of applications including communications, industrial systems and mobile battery powered systems. Packing up to 10 Watts of power into a 2 x 1 x 0.395 inch package, with efficiencies as high as 85%, the BXA10 has wide input ranges of 9-18VDC and 18-75VDC, and is available in single and dual output versions. Isolation of 1500VDC, approval to EN60950 2nd edition, coupled with reduced conducted noise for simplified compliance to FCC Part 15 level A and EN55022 level A, make the BXA10 ideal for telecommunications and distributed power applications. Other features include overvoltage protection, continuous short circuit protection with automatic recovery and remote on/off, all of which minimize the need for external circuitry and make the BXA10 a recommended component in distributed power systems.



CE (LVD) VDE

2 YEAR WARRANTY

All specifications are typical at nominal input, full load at 25°C unless otherwise stated

SPECIFICATIONS

OUTPUT SPECIFICATIONS

Line regulation	LL to HL, single output LL to HL, dual output	±0.2% ±0.2%
Load regulation	10% to 100% FL (See Note 4)	±0.5%
Minimum load	48V models 12V models	10% full load No minimum load
Overshoot	At start-up	10% max.
Ripple and noise (See Note 2)	5Hz to 20MHz	100mV pk-pk, max. 20mV rms
Transient response	25% load step	±2.0% max. dev., 250µs recovery to within ±1.0%
Temperature coefficient		±0.02%/°C max.
Overvoltage protection	Clamp type	See table
Short circuit protection	Hiccup	Continuous automatic recovery

INPUT SPECIFICATIONS

Input voltage range	12VDC (See Note 6) 48VDC	9 to 18VDC 18 to 75VDC
Input filter		Pi type
Start up surge current	Resistive load	1.5A max.
Remote ON/OFF ON (See Note 3) OFF OFF idle current		Open collector compatible High impedance >400kΩ Low impedance <1.0kΩ <1.5mA
Start-up time		1.6s, max.

EMC CHARACTERISTICS

Conducted emissions	EN55022, FCC, (See Note 8)	Level A
ESD air	EN61000-4-2, level 2	Perf. criteria 1
ESD contact	EN61000-4-2, level 3	Perf. criteria 1
Surge	EN61000-4-5, level 2	Perf. criteria 1
Fast transients	EN61000-4-4, level 2	Perf. criteria 1
Radiated immunity	EN61000-4-3, level 3	Perf. criteria 1
Conducted immunity	EN61000-4-6, level 3	Perf. criteria 1

GENERAL SPECIFICATIONS

Efficiency		See table
Isolation voltage	Input/output Input or output to case	1500VDC 1000VDC
Switching frequency	Fixed	400kHz
Approvals and standards	Safety	VDE0805, EN60950, IEC950 UL1950, CSA C22.2 No. 950
Case material		Black coated, six-sided metal case
Material flammability		UL94V-0
Weight		20g (0.71oz)
MTBF	MIL-HDBK-217F Bellcore	519,000 hours >2 million hours

ENVIRONMENTAL SPECIFICATIONS

Thermal performance	Operating ambient (See derating curve) Non-operating amb. Case Derating Cooling	-25°C to +71°C -55°C to +125°C +110°C max. See derating curve Free air convection cooled
Relative humidity	Non-condensing	5% to 95% RH
Altitude	Operating Non operating	10,000 feet max. 40,000 feet max.
Vibration	5Hz to 500Hz	2.5G rms (approx.)

BXA10 Series

Single and dual output

For the most current data and application support visit www.artesyn.com/powergroup/products.htm

INPUT VOLTAGE	OUTPUT VOLTAGE	OUTPUT CURRENT	INPUT CURRENT (1)	TYPICAL EFFICIENCY	OVP	REGULATION (Typ.)		MODEL NUMBER (3)
						LINE	LOAD	
9-18VDC	5.0V	2.0A	1.1A	81%	6.2VDC	±0.2%	±0.5%	BXA10-12S05
9-18VDC	15.0V	0.67A	1.05A	85%	18VDC	±0.2%	±0.5%	BXA10-12S15
9-18VDC	±5.0V	±1.0A	1.05A	81%	12VDC	±0.2%	±0.5%	BXA10-12D05
18-75VDC	5.0V	2.0A	0.26A	82%	6.8VDC	±0.2%	±0.5%	BXA10-48S05
18-75VDC	±5.0V	±1.0A	0.26A	82%	12VDC	±0.2%	±0.5%	BXA10-48D05
18-75VDC	±12.0V	±0.416A	0.25A	84%	30VDC	±0.2%	±0.5%	BXA10-48D12
18-75VDC	±15.0V	±0.333A	0.25A	84%	36VDC	±0.2%	0.5%	BXA10-48D15

Notes

1. At nominal input and output voltage and maximum load.
2. Output ripple can be reduced to <50mV with the addition of a 33µF, 25V, AVX-TPS (or equivalent) tantalum capacitor. Consult factory for further information.
3. For units with optional remote ON/OFF, please add the suffix '-S' to the model number: e.g. **BXA10-48S05-S**. Maximum open pin voltage 14VDC.
4. Assumes balanced loads on dual output models.
5. High impedance source/long input power cable may necessitate the introduction of an input filter.
6. Typical 9-18VDC model start-up voltage is 9V. Maximum start-up voltage is 9.5V (>0°C) or 9.7V (<0°C).
7. It is recommended that an IEC127, 250V, fast blow fuse is used rated at 4A for nominal 12V models and 2A for 48V models.
8. To achieve compliance to EN55022-A and FCC part 15 Class A, external capacitors of the following values are needed:

Model	C1*	C2	C3
BXA10-12xxx	10µF film, 25V	0.22µF film	0.22µF film
BXA10-48xxx	10µF film, 100V	0.22µF film	0.22µF film

(C2, C3 voltage rating application dependent)
* Siemens P.N. B32512-J1106-J or equivalent.

PIN CONNECTIONS		
PIN NUMBER	SINGLE OUTPUT	DUAL OUTPUT
1	+Vin	+ Vin
2	– Vin	– Vin
3	+ Vout	+ Vout
4	No Pin	Common
5	– Vout	– Vout
6*	Remote ON/OFF	Remote ON/OFF

* Optional remote ON/OFF pin. Add Suffix '-S' to the model number, Note 3.

File Name: BXA10.PDF Rev: 02 Oct 2002

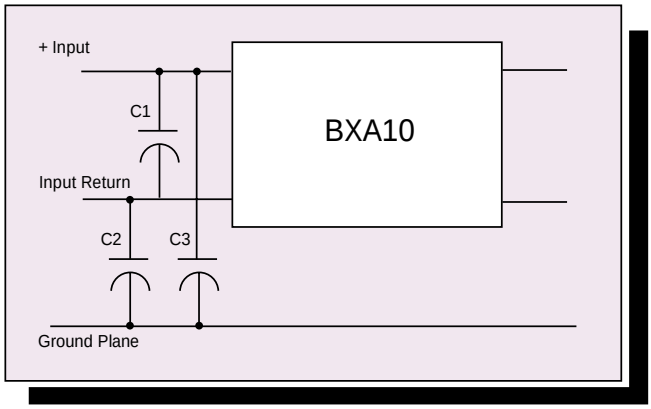

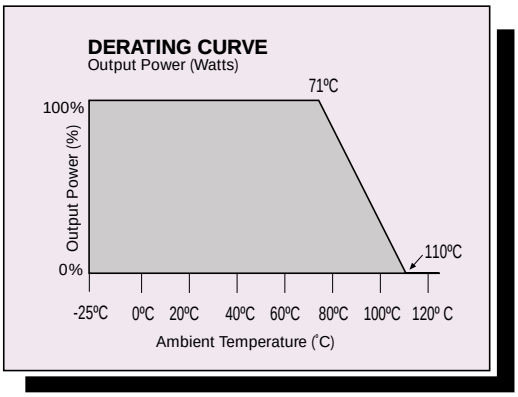

Mechanical Notes

A Recommended PCB hole diameter is 0.052 inches (1.32mm).
B All pins are in true position within 0.010 inches (0.25mm).
C Tolerance (inches): .XX = ±0.02
XXX = ±0.005

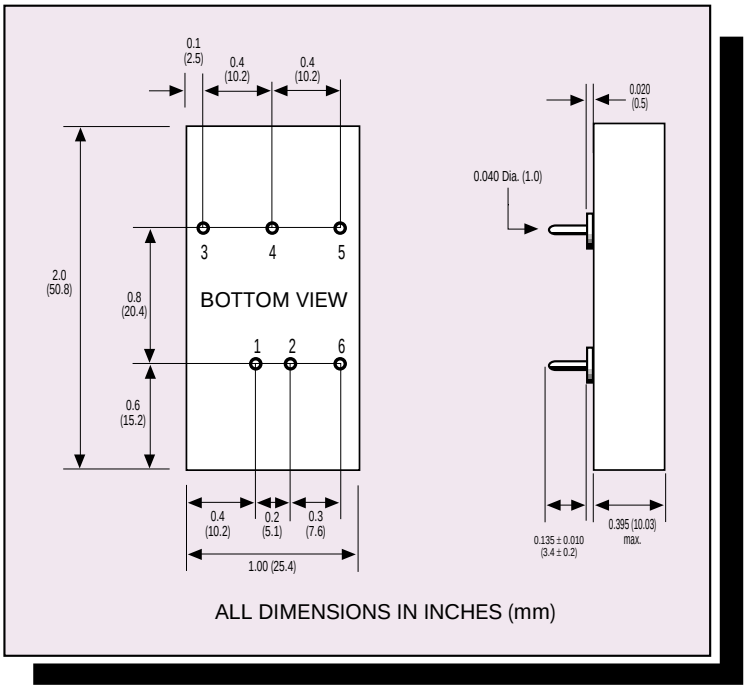

International Safety Standard Approvals

VDE0805/EN60950/IEC950 File No. 10401-3336-1094
Licence No. 6298 and 6299

UL1950 File No. E136005

CSA C22.2 No. 950 File No. LR41062C

Data Sheet © Artesyn Technologies® 2002
The information and specifications contained in this data sheet are believed to be correct at time of publication. However, Artesyn Technologies accepts no responsibility for consequences arising from printing errors or inaccuracies. Specifications are subject to change without notice. No rights under any patent accompany the sale of any such product(s) or information contained herein.