BXA3 Series

Single and dual output

- **3 Watts in DIL Package**
- **9 models including 3.3VDC output**
- **Wide input ranges 9-18V, 18-36V, 36-75V**
- **EN55022 conducted emissions level A (optional)**
- **Continuous short circuit protection**
- **Operating temperature range -25°C to +105°C**
- **Input voltage range to ETS300-132-2**
- **UL, VDE and CSA safety approvals**

The BXA3 Series of DC/DC converters is designed to offer the optimum cost/benefit power solution for a wide variety of applications including public and private telecommunications, industrial systems and process and test equipment. The series consists of 9 models with input voltages of 9-18VDC, 18-36VDC and 36-75VDC, and offers standard output voltages of 3.3V, 5V, 12V and 15V in single and dual output configurations. Continuous short circuit protection, overvoltage protection, 60mV output ripple and EN55022 level A conducted noise compliance minimize design-in time, cost and eliminate the need for external components.



CE (LVD)

2 YEAR WARRANTY

All specifications are typical at nominal input, full load at 25°C unless otherwise stated

SPECIFICATIONS

OUTPUT SPECIFICATIONS

Voltage accuracy		±1.0%
Line regulation	LL to HL, all outputs	±2.5%
Load regulation	Full load to no load	±2.5%
Ripple and noise (5Hz to 20MHz)	+5V output	60mV pk-pk, max., 15mV rms
	All others	100mV pk-pk, max., 15mV rms
Temperature coefficient		±0.02%/°C, max.
Over voltage protection	Clamp diode	135% Vout
Short circuit protection		Continuous automatic recovery

INPUT SPECIFICATIONS

Input voltage range	12VDC 24VDC 48VDC	9 to 18VDC 18 to 36VDC 36 to 75VDC
Input filter	Suffix '-F' (See Note 5)	Pi type
Reverse voltage protection	(See Note 7)	Yes
Max. input rise and fall time	Output remains within specification	5V/ms

International Safety Standard Approvals

VDE0805/EN60950/IEC950 Licence No. 5856

UL1950 File No. E136005

CSA C22.2 No. 950 File No. LR41062C

EMC CHARACTERISTICS

Conducted emissions	EN55022, FCC part 15 Suffix '-F' versions (See Notes 5 and 6)	Level A

GENERAL SPECIFICATIONS

Efficiency		See table
Isolation voltage	Input/output	500VDC
Switching frequency	Variable	200kHz to1MHz
Approvals and standards		VDE0805, EN60950, IEC950 UL1950, CSA C22.2 No. 950
Case material		Non-conductive black plastic
Material flammability		UL94V-0 min.
Weight		15g (0.53oz)
MTBF	MIL-HDBK-217F	800,000 hours

ENVIRONMENTAL SPECIFICATIONS

Thermal performance	Operating ambient (See derating curve)	-25°C to +105°C
	Non-operating amb	-40°C to +105°C
	Cooling	Free air convection cooled
Relative humidity	Non-condensing	5% to 95% RH
Altitude	Operating	10,000 feet max.
	Non operating	40,000 feet max.
Vibration	5Hz to 500Hz	2.5G rms (approx.)

BXA3 Series

Single and dual output

For the most current data and application support visit www.artesyn.com/powergroup/products.htm

INPUT VOLTAGE	OUTPUT VOLTAGE	OUTPUT CURRENT (1)	INPUT CURRENT (2)	TYPICAL EFFICIENCY	REGULATION		MODEL NUMBER (5,8)
					LINE (3)	LOAD (4)	
9-18VDC	3.3V	600mA	245mA	68%	±2.5%	±2.5%	BXA3-12S3V3
9-18VDC	15.0V	200mA	335mA	75%	±2.5%	±2.5%	BXA3-12S15
18-36VDC	3.3V	600mA	122mA	68%	±2.5%	±2.5%	BXA3-24S3V3
18-36VDC	5.0V	500mA	140mA	76%	±2.5%	±2.5%	BXA3-24S05
18-36VDC	±5.0V	±250mA	140mA	76%	±2.5%	±2.5%	BXA3-24D05
36-75VDC	3.3V	600mA	61mA	68%	±2.5%	±2.5%	BXA3-48S3V3
36-75VDC	5.0V	500mA	69mA	76%	±2.5%	±2.5%	BXA3-48S05
36-75VDC	12.0V	250mA	83mA	76%	±2.5%	±2.5%	BXA3-48S12
36-75VDC	15.0V	200mA	83mA	76%	±2.5%	±2.5%	BXA3-48S15

Notes

1 Maximum.
2 Maximum figure at full load (nominal).
3 Low line to high line.
4 Full load to no load.
5 An optional internal filter is available. When the filter is added, the BXA3 will meet VDE0871-A, VDE0878-A and EN55022-A. Add the suffix '-F' to the model number, e.g. **BXA3-12S15-F**.
6 Conducted noise filtering to EN55022 level B may be accomplished by putting the following capacitors across the input pins.

12VDC	5µF ceramic X7R dielectric type
24VDC	3µF ceramic X7R dielectric type
48VDC	1µF ceramic X7R dielectric type

7 Reverse voltage protection can be implemented by putting a fast blow fuse on the positive input rail. Rate the fuse for 250mA at 48VDC input, 500mA at 24VDC input and 1000mA at 12VDC input.
8 NOTICE: Some models do not support all options. Please contact your local Artesyn representative or use the on-line model number search tool at http://www.artesyn.com/powergroup/products.htm to find a suitable alternative.

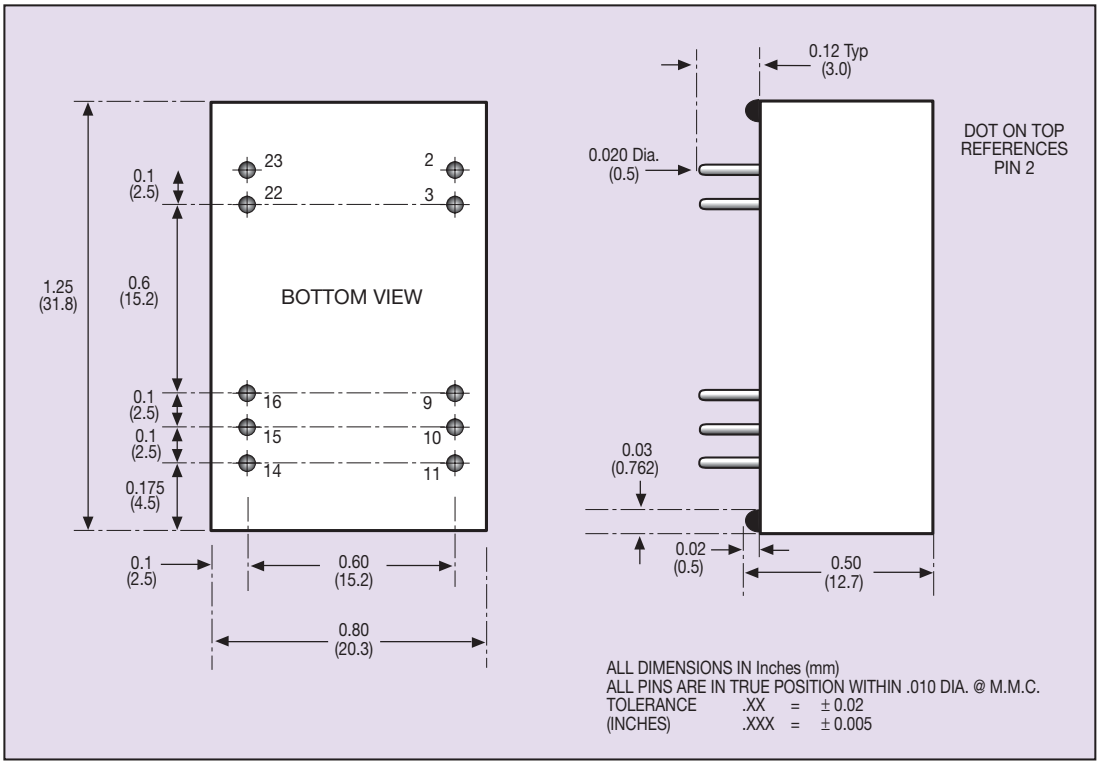

PIN CONNECTIONS		
PIN NUMBER	**SINGLE OUTPUT**	**DUAL OUTPUT**
2	–Vin	–Vin
3	–Vin	–Vin
22	+Vin	+Vin
23	+Vin	+Vin
9	No Pin	Common
10	No Pin	No Pin
11	No Connection	-Vout
14	+Vout	+Vout
15	No Pin	No Pin
16	-Vout	Common

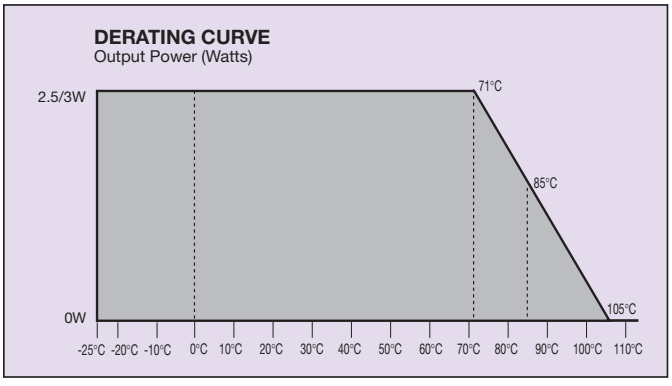

Datasheet © Artesyn Technologies® 2005
The information and specifications contained in this datasheet are believed to be correct at time of publication. However, Artesyn Technologies accepts no responsibility for consequences arising from printing errors or inaccuracies. Specifications are subject to change without notice. No rights under any patent accompany the sale of any such product(s) or information contained herein.