Rev.11.26.07
rfb300/350

RFB300/350 Series

Single Output

Total Power: **300 - 350W**
Input Voltage: **18 - 36 Vdc**
36 - 75 Vdc
# of Outputs: **Single**





RoHS 2002/95/EC

Special Features

- High efficiency topology
- Wide temperature range, -40 °C to +100 °C @ full power
- High power density (160 W/in³ in 0.4" tall version)
- Input voltage range: 18-36 Vdc or 36-75 Vdc
- Output voltage range: 7.2-13.2 Vdc or 16.8-29.4 Vdc
- Remote ON/OFF
- Operational insulation system
- Available RoHS compliant
- 2 Year Warranty

RFB300/350 series is a high efficiency, enclosed, isolated dc-dc converter series in an industry standard half-brick package that provides up to 350 W of output power. The series delivers very high usable output power for today's high performance RF power amplifier and similar applications. The four models in the series feature an input voltage range of 18 Vdc to 36 Vdc and 36 Vdc to 75 Vdc and an output voltage of 12 V and 28 V. The output voltage is adjustable from 7.2 Vdc to 13.2 Vdc or 16.8 Vdc to 29.4 Vdc (not to exceed 308 W for the RFB300 [300 W for the RFB300-24S12] and 350 W for the RFB350). The series also has a remote ON/OFF capability. Overcurrent, overvoltage and overtemperature protection features are included as standard. Negative logic remote ON/OFF and other options are also available. Full international safety approval including EN/IEC60950 VDE and UL/cUL60950 reduces compliance costs and time to market.

Safety

UL/cUL CAN/CSA 22.2
No. 60950
File No. E135734

VDE0805/EN60950/IEC950
File No. 10401-3336-0198
Licence No. 40005395

ARTESYN®

EMERSON™
Network Power

Specifications

All specifications are typical at nominal input, full load at 25 °C unless otherwise stated.
External output capacitance required (See Note 4).

ABSOLUTE MAXIMUM RATINGS		
Input voltage - peak (100 ms max., 1.0 % duty cycle max.)	24 Vin 48 Vin	-0.5-50 Vdc -0.5-100 Vdc
Input voltage continuous	24 Vin 48 Vin	-0.5-40 Vdc -0.5-80 Vdc
Adjust pin voltage (with respect to -sense pin)		-0.5-12 Vdc

OUTPUT SPECIFICATIONS		
Voltage adjustability	12 Vout 28 Vout	7.2-13.2 Vdc 16.8-29.4 Vdc
Min./max. load	12 Vout 28 Vout	0/25 A, 0/29.2 A 0/11 A, 0/12.5 A
Output load capacitance (See Note 10)	12 Vout 28 Vout	470 µF to 4,700 µF 330 µF to 3,300 µF
Rise time	(See Note 12)	5 ms typ.

INPUT SPECIFICATIONS		
Input current (See Note 3)	24 Vin 48 Vin RFB300 48 Vin RFB350	23.8 A max. @ lo max. 11.2 A max. @ lo max. 13 A max. @ lo max.
Input reflected ripple (See Note 4)	24 Vin 48 Vin 12 V model 48 Vin 28 V model	12 mA (pk-pk) 42 mA (pk-pk) 28 mA (pk-pk)
Input capacitance - Internal filter	24 Vin 48 Vin	39 µF 13 µF
Inrush current	(See Note 11)	2 A^2s

EMC CHARACTERISTICS		
Conducted emissions Radiated emissions	EN55022 EN55022	See Application Note 167 See Application Note 167

GENERAL SPECIFICATIONS		
Efficiency Vin = Vin (nom), Iout (max.)	24 Vin 12 V model 24 Vin 28 V model 48 Vin 12 V model 48 Vin 28 V model	86% 90% 88% 91%
Approvals and standards		VDE IEC60950 IECEE CB, UL/cUL60950
Material Flammability		UL94V-0
Weight	0.5 inch tall version	110 g (3.88 oz.)
MTBF @ 55 °C Telcordia SR-332 Issue 1	12 V model 28 V model	1,900,000 hours min. 2,400,000 hours min.

ENVIRONMENTAL SPECIFICATIONS		
Thermal performance	Operating baseplate, temperature Non-operating	-40 °C to +100 °C -40 °C to +100 °C

RC PIN ELECTRICAL INTERFACE		
Open collector compatible	(See AN 167 for remote ON/OFF)	
RC: ON voltage Open circuit voltage	(See Note 13)	5 V min. 5 V min, 11 V typ 13 V max.
High level leakage current	(See Note 14)	-25 µA max.
OFF voltage	(See Note 15)	1.2 V max.
Low level input current	(See Note 16)	-250 µA max.

Ordering Information

OUTPUT POWER (MAX.)	INPUT VOLTAGE	OUTPUT VOLTAGE	OUTPUT CURRENT (MIN.)	OUTPUT CURRENT (MAX.)	EFFICIENCY (TYP.)	REGULATION		MODEL NUMBER ([18,20])
						LINE	LOAD	
300 W	18-36 Vdc	7.2-13.2 Vdc	0 A	25 A	86%	±0.15%	±0.2%	RFB300-24S12Y
308 W	18-36 Vdc	16.8-29.4 Vdc	0 A	11 A	90%	±0.15%	±0.2%	RFB300-24S28Y
308 W	36-75 Vdc	16.8-29.4 Vdc	0 A	11 A	91%	±0.15%	±0.2%	RFB300-48S28Y
350 W	36-75 Vdc	7.2-13.2 Vdc	0 A	29.2 A	88%	±0.15%	±0.2%	RFB350-48S12Y[17]
350 W	36-75 Vdc	16.8-29.4 Vdc	0 A	12.5 A	91%	±0.15%	±0.2%	RFB350-48S28Y

Part Number System with Options

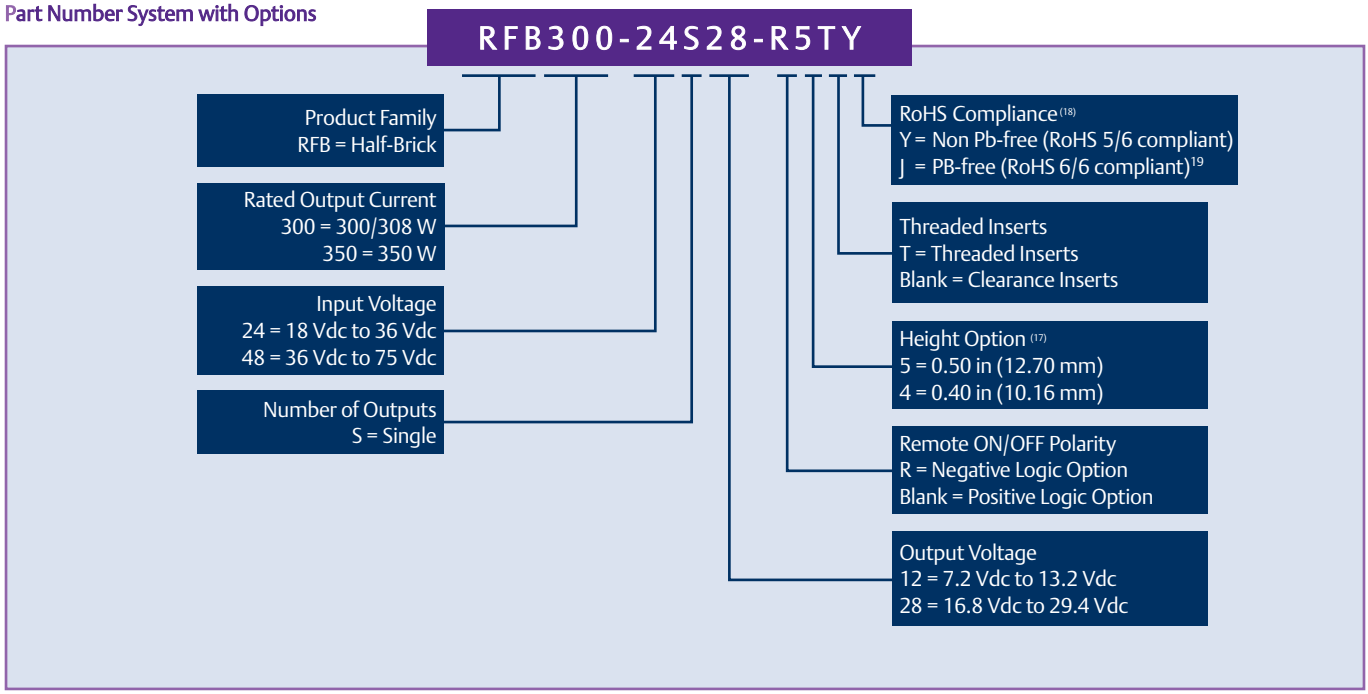

Notes

1 Measurement Bandwidth: 20 MHz; Measured with 1 µF ceramic and a 330 µF (470 µF for 12 V output model) aluminum or solid tantalum capacitor across the output terminals.
2 Di/dt = 1 A/µs; ΔI_{out} = ±25% Iout (max); Vin = Vnom; Iout = Inom. Tested with a 1 µF ceramic and a 330 µF (470 µF for 12 V output model) aluminum electrolytic capacitor across the output.
3 External input fusing required. Use a fast acting fuse: 40 A (24 V model), 15 A (48 V, 350 W model).
4 Iout = Iout (max) Measured with the input capacitor, Cbypass = 330 µF, and 6 µH inductor in series with the power source. Frequencies >100 kHz.
5 Signal line assumed <3 m in length.
6 This product is only for inclusion by professional installers within other equipment and must not be operated as a stand-alone product.
7 Negative remote ON/OFF option also available. Add suffix '-R' to part number, for example see part numbering system.
8 With the enable signal asserted, this is the time from when the input current reaches 10 % of the final steady state value until the output voltage reaches 10 % of the nominal output value. Start-up into resistive load.
9 With Vin > Vin (min.) applied for a minimum of 1 second, this is the time from when the primary ON/OFF signal is activated until the output voltage reaches 10 % of the nominal output voltage.
10 Minimum effective ESR is 1 mΩ. Minimum phase margin is 35°.
11 Measured per ETSI 300 132-2 Section 4.7.2.
12 From 10% to 90% of Vout (nom). Full resistive load. 1 µF ceramic and 330 µF (470 µF for 12 V model) electrolytic capacitors across the output.
10 Minimum effective ESR is 1 mΩ. Minimum phase margin is 35°.
11 Measured per ETSI 300 132-2 Section 4.7.2.
12 From 10% to 90% of Vout (nom). Full resistive load. 1 µF ceramic and 330 µF (470 µF for 12 V model) electrolytic capacitors across the output.
13 Converter guaranteed ON for positive option.
14 Maximum driver leakage to insure converter is ON.
15 Converter guaranteed OFF for positive option.
16 Driver sink current @ Vrc ≤ 1.2 V.
17 0.40 in height option is not available on the 12 V output model.
18 The'Y' suffix indicates that these parts are TSE ToHS 5/6 (non-Pb-free) compliant
19 New RoHS 6/6 codes coming soon: RFB300-48S28-R5J; RFB350-48S12-R5J.
20 Notice: Some models do not support all options. Please contact your local sales representative.

PROTECTION		
Short-circuit (Brickwall current limiting)	12 V model RFB300 12 V model RFB350 28 V model RFB300 28 V model RFB350	29.4 A 34.4 A 12.9 A 14.7 A
Overvoltage protection (Output shutdown)	12 V model 28 V model	15 V 33.2 V
Overtemperature shutdown	(midpoint of baseplate)	110 °C

Specifications Contd.

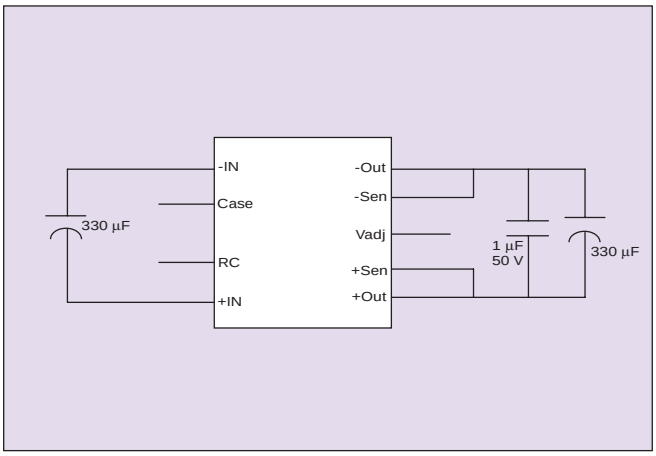

Figure 1 - Standard Application - 28 V Models

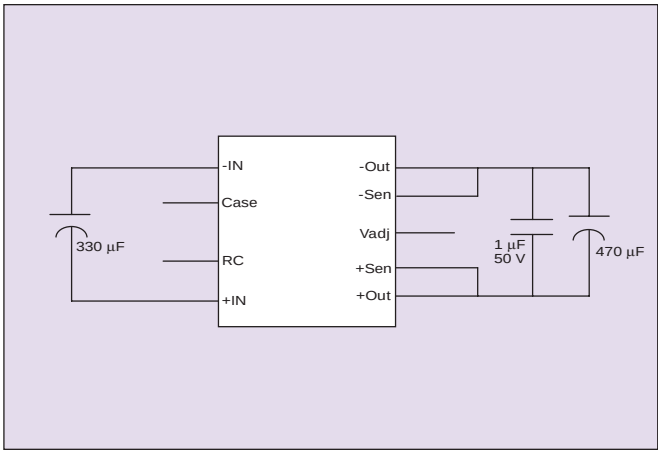

Figure 2 - Standard Application - 12 V Models

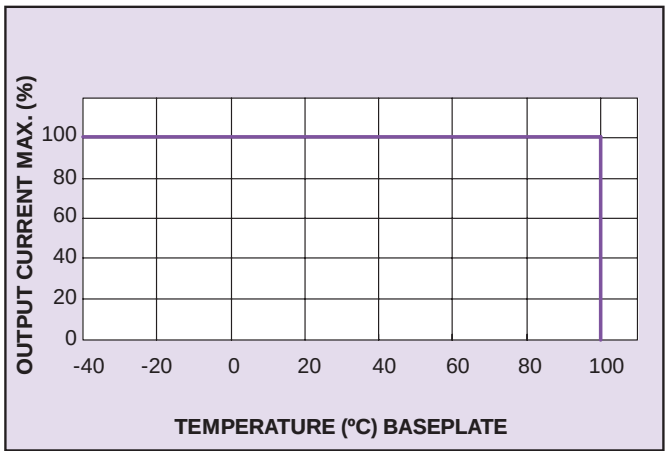

Figure 3 - Derating Curve - All Models

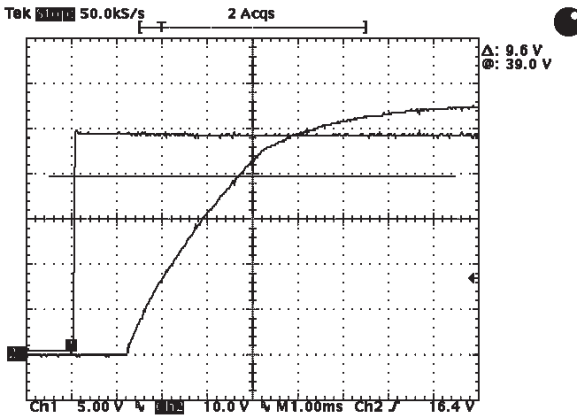

Figure 4 - Typical Turn-on Delay and
Risetime RFB350-48S28Y
Channel 1: Output Voltage, Channel 2: Input Voltage

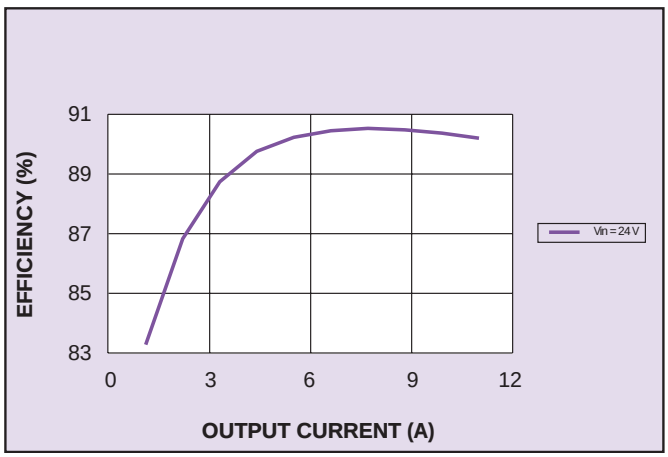

Figure 5 - Typical Efficiency vs.
Output Current – RFB300-24S28Y

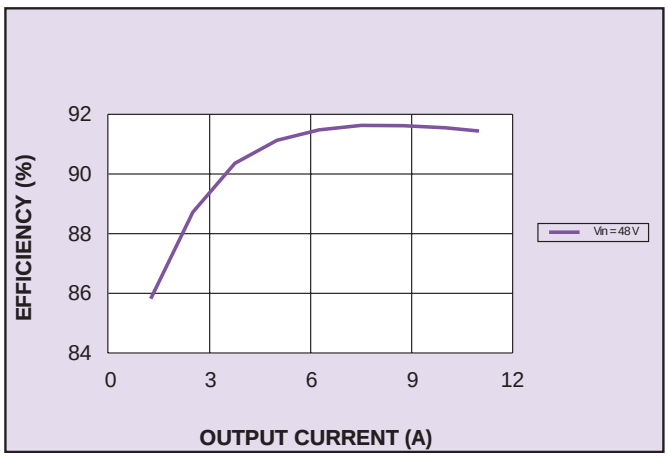

Figure 6 - Typical Efficiency vs.
Output Current – RFB300-48S28Y

Specifications Contd.

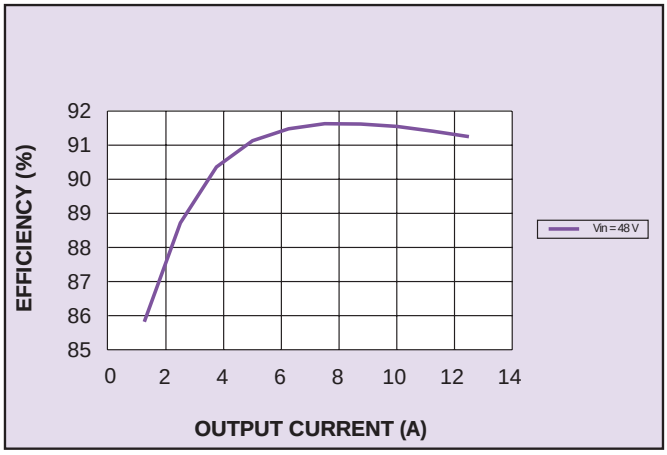

Figure 7 - Typical Efficiency vs.
Output Current – RFB350-48S28Y

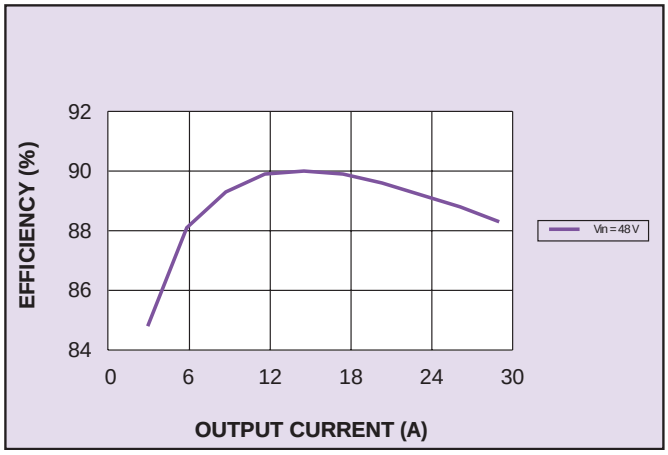

Figure 8 - Typical Efficiency vs.
Output Current – RFB350-48S12Y

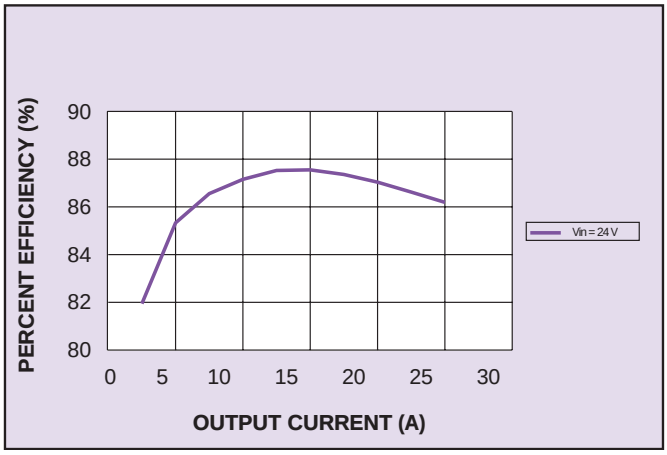

Figure 9 - Typical Efficiency vs.
Output Current – RFB300-24S12Y

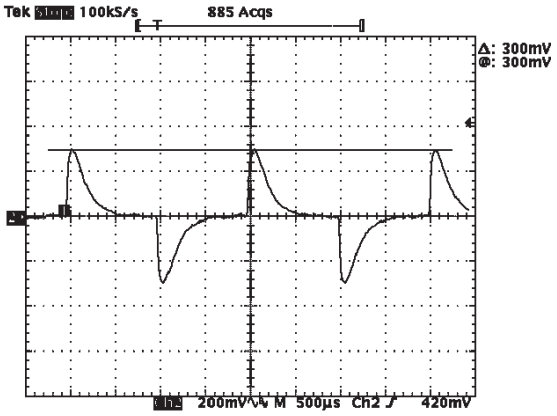

Figure 10 - RFB350-48S28Y Transient Response
Load 6.25-9.38 A

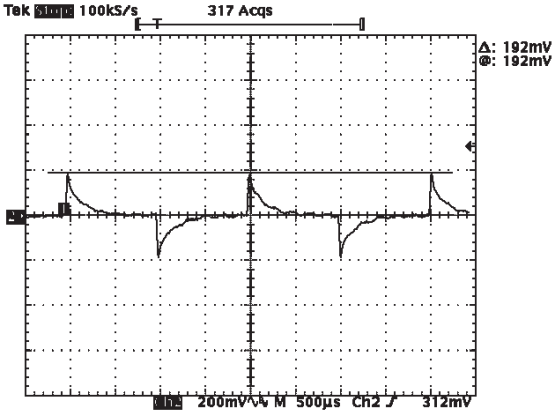

Figure 11 - RFB350-48S12Y Transient Response
Load 14.5-21.75 A

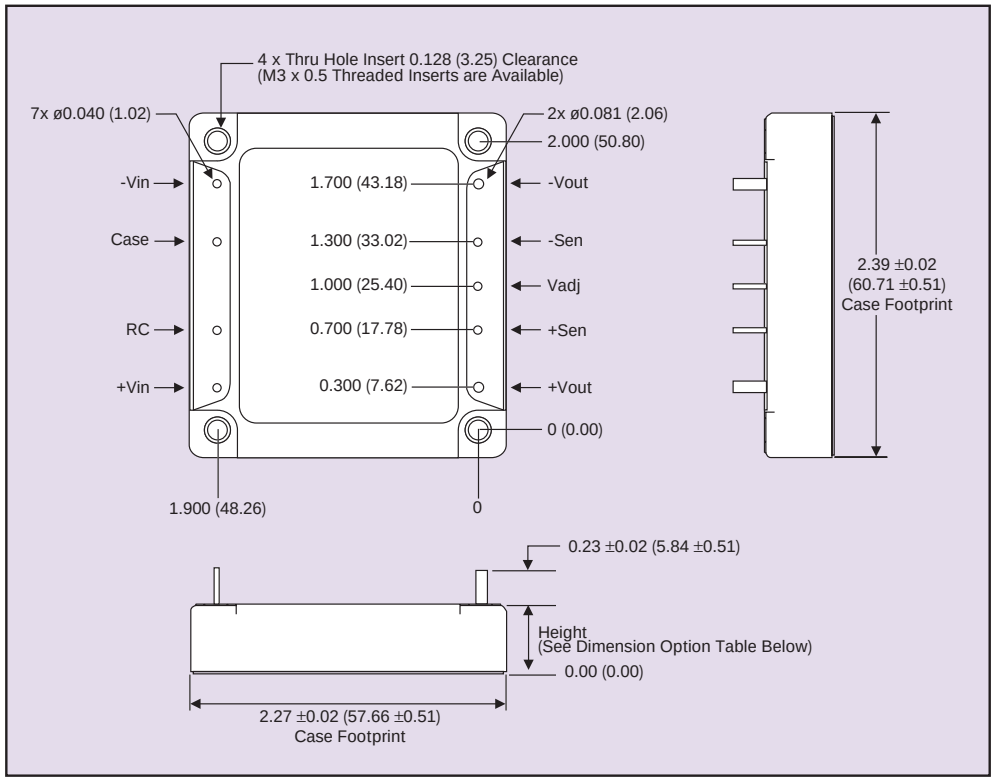

Figure 12 - Mechanical Drawing, Dimension Options and Pin-Out Table

Dimension Options	
Option	**Height**
5	0.50 ±0.02 (12.70 0.51)
4	0.40 ±0.02 (10.16 ±0.51)

PIN CONNECTIONS	
PIN NUMBER	**FUNCTION**
-Vin	Negative Input Terminal
Case	
RC	ON/OFF Control Terminal
+Vin	Positive Input Terminal
+Vout	Positive Output Terminal
+Sen	Positive Remote Sense
Vadj	Output Adjustment Trim Pin
-Sen	Negative Remote Sense
-Vout	Negative Output Terminal

Americas
5810 Van Allen Way
Carlsbad, CA 92008
USA
Telephone: +1 760 930 4600
Facsimile: +1 760 930 0698

Europe (UK)
Waterfront Business Park
Merry Hill, Dudley
West Midlands, DY5 1LX
United Kingdom
Telephone: +44 (0) 1384 842 211
Facsimile: +44 (0) 1384 843 355

Asia (HK)
16th - 17th Floors, Lu Plaza
2 Wing Yip Street, Kwun Tong
Kowloon, Hong Kong
Telephone: +852 2176 3333
Facsimile: +852 2176 3888

For global contact, visit:
www.powerconversion.com
technicalsupport@powerconversion.com

While every precaution has been taken to ensure accuracy and completeness in this literature, Emerson Network Power assumes no responsibility, and disclaims all liability for damages resulting from use of this information or for any errors or omissions.

Emerson Network Power.
The global leader in enabling business-critical continuity.

- AC Power
- Connectivity
- DC Power
- **Embedded Power**
- Inbound Power
- Integrated Cabinet Solutions
- Outside Plant
- Precision Cooling
- Site Monitoring and Services

EmersonNetworkPower. com

Emerson Network Power and the Emerson Network Power logo are trademarks and service marks of Emerson Electric Co.
©2007 Emerson Electric Co.