APS-CR2032-220D Series

220mAh, 3V Lithium Manganese Dioxide Primary Coin Cell Battery

RoHS Compliant

Features

- Lithium Manganese Dioxide(Li/MnO_2)
- Nominal capacity 220mAh
- Nominal voltage: 3V
- 15kΩ continuous discharge to the end-point voltage 2V@20±3˚C
- Weight: 3g
- Dimensions: ϕ 20x3.2mm
- Operating Temperature Range: -20˚C to 80˚C
- 1-year warranty



*Product images are for illustrative purposes only and may vary from actual design.

Applications

- Small portable electronic devices

Model List*(See part number scheme for model number details)

Model Number	Nominal Capacity	Nominal Voltage	Operating Temp.
APS-CR2032-220D	220mAh	3V	-20C˚-80C˚

*Contact Autec Sales for ordering options

Technical Data

Item	Storage	Performance	Test Condition
OCV	Fresh -20C	3.1V-3.3V	DC Voltmeter accuracy ≥±0.005V input impedance ≥ 1MΩ
	After 12 months	3V-3.1V	
CCV	Fresh	≥3.1V	DC Voltmeter: Same as above load: 62kΩ for 0.8 sec.
	After 12 months	≥3V	
15KΩ23 Continuous Discharge of life	Fresh	≥1080h	RD: 15KΩ
	After 12 months	≥980h	CCV:2V

Leakage Proof Performance

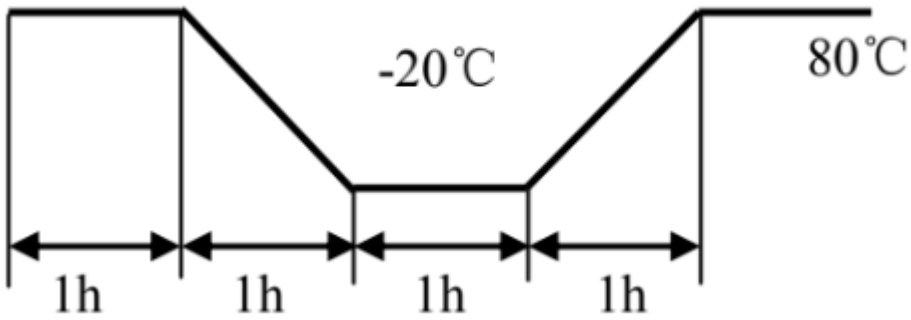

Typical Discharge Current 15KΩ Load

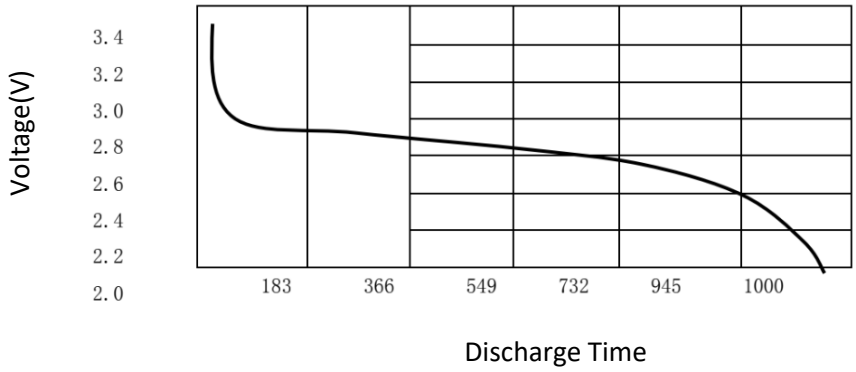

Mechanical Diagram

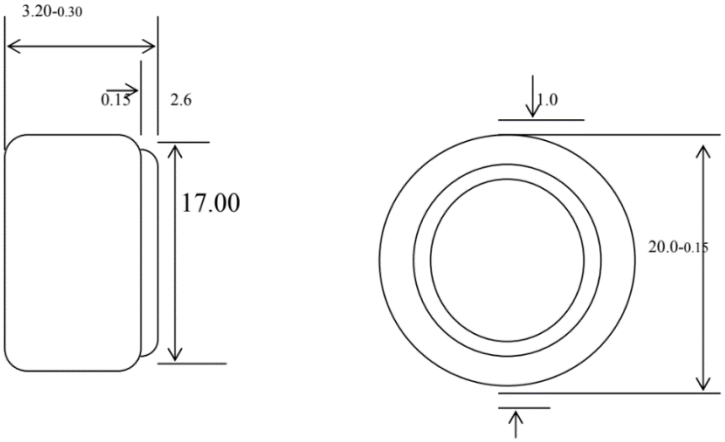

Warnings

1. **Install batteries correctly.**
2. **Ensure the contact points to be clean and conductive.**
3. **Do not mix different types or brands of batteries in any application.**
4. **Do not attempt to recharge these batteries.**
5. **Do not expose the batteries to heat or fire.**
6. **Keep away from small children.**
7. **Please check the manufacturing date code.**

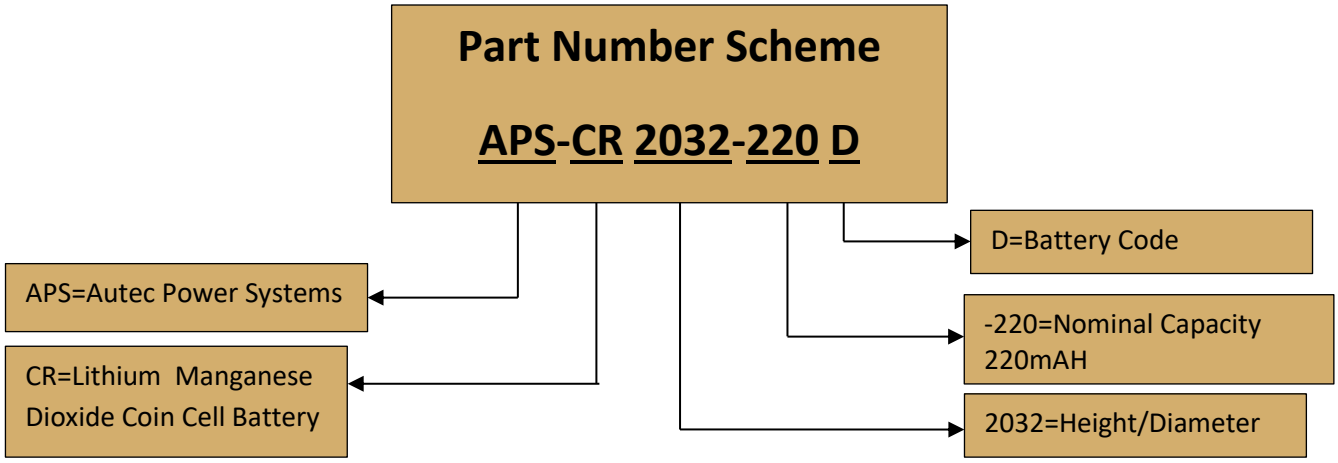

***Product images are for illustrative purposes only and may vary from actual design.**
***Specifications are subject to change without notice. Autec is not responsible for issues arising from errors or omissions.**