AVERY DENNISON MARKETING SPECIFICATION

THE SUBJECT MATTER DISCLOSED HEREIN EMBODIES PROPRIETARY INFORMATION WHICH IS THE CONFIDENTIAL PROPERTY OF THE AVERY DENNISON CO. NONE OF WHICH SHALL BE COPIED, REPRODUCED, DISCLOSED TO OTHERS, PUBLISHED OR USED IN WHOLE OR IN PART FOR ANY PURPOSE OTHER THAN THAT FOR WHICH IT IS BEING MADE AVAILABLE WITHOUT THE EXPRESS ADVANCE WRITTEN PERMISSION OF A DULY AUTHORIZED AGENT OF THE COMPANY. THIS DOCUMENT IS THE PROPERTY OF THE AVERY DENNISON CO. AND IS TO BE RETURNED TO THE COMPANY ON DEMAND.

HISTORY

REV.	DATE	DESCRIPTION
B	02.03.15	REDRAWN IN NEW FORMAT. ADDED UL LOGO. CHG. DIM 1 TO BE TAKEN FROM BOTTOM OF HEAD. UPDATED DIM 5

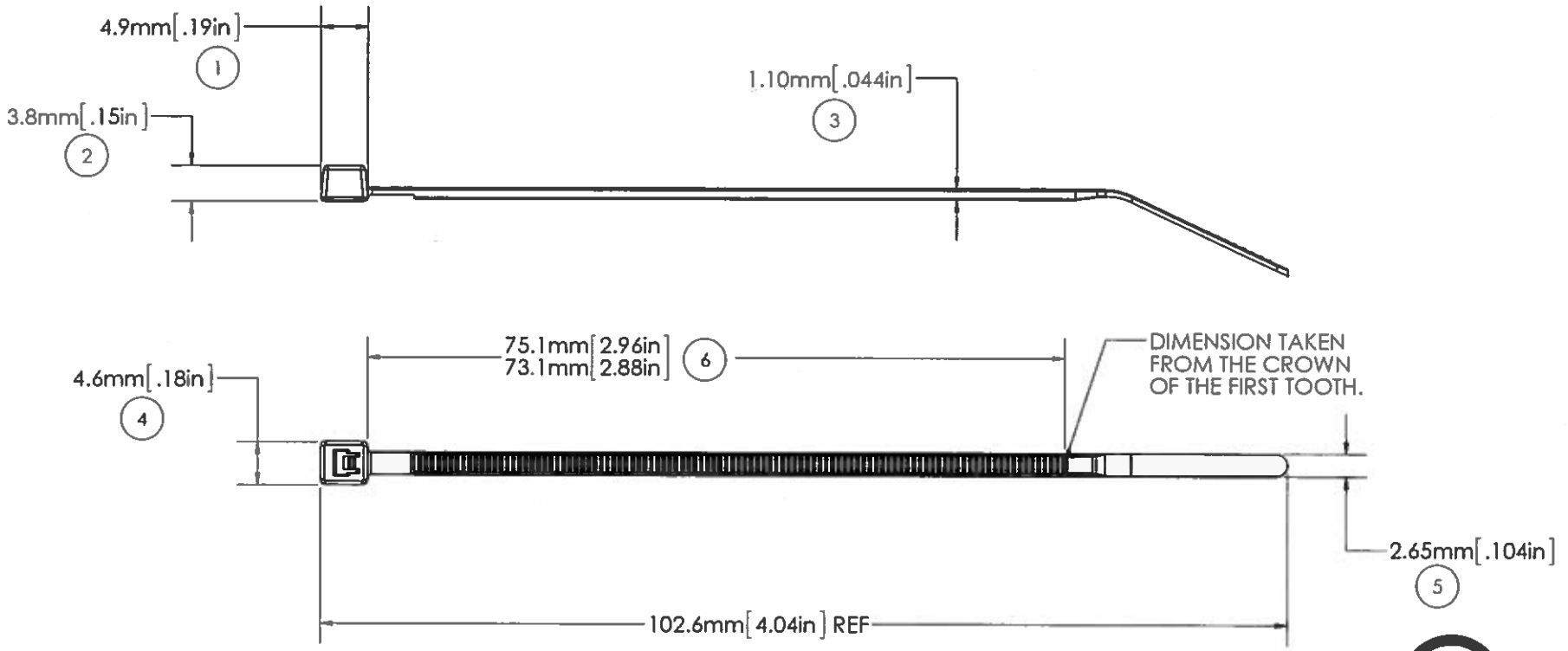

MILITARY STANDARD:	MS-3367-4-9
LOOP TENSILE STRENGTH:	18 lbs./80N MIN. PER AS-23190
OPERATING TEMP RANGE:	-40°F (-40°C) TO 185°F (85°C)
MIN. INSTALLATION TEMP:	32°F (0°C)
WEIGHT:	0.29g
BUNDLE DIAMETER:	Ø1.6mm[.06in] TO Ø22.2mm [.87in]
TOOL:	12001 - HAND INSTALLATION TOOL 12500 - PNUEM. INSTALLATION TOOL
TOOL TENSION SETTING:	1 - 3
PACKAGING:	100/BAG 5000/CASE

NOTE: THESE CABLE TIES ARE PLENUM RATED AND HAVE A FLAMMABILITY RATING OF V-2

c UL us
LISTED
POSITIONING DEVICE
E57800
TYPE 21

APPROVALS: ENG. APPR. 2/3/15
Q.A. APPR. L Boyle 2/3/15

AVERY DENNISON
FASTENER DIVISION
FITCHBURG, MA 01420 U.S.A.
TEL. 1-800-225-5913
FAX. 978-353-8157

SPECIFIED TOLERANCES ARE:
.XX ± .03 IN. .X ± .7 MM
.XXX ± .010 IN. .XX ± .25 MM
ANGULAR: ± 2°

MATERIAL: NYLON 6/6
COLOR: NATURAL

DESCRIPTION: 4 " CABLE TIE MINIATURE
STOCK NO.: 08434-0
REV.: B

5 4 3 2 1