AVERY DENNISON MARKETING SPECIFICATION

THE SUBJECT MATTER DISCLOSED HEREIN EMBODIES PROPRIETARY INFORMATION WHICH IS THE CONFIDENTIAL PROPERTY OF THE AVERY DENNISON CO. NONE OF WHICH SHALL BE COPIED, REPRODUCED, DISCLOSED TO OTHERS, PUBLISHED OR USED IN WHOLE OR IN PART, FOR ANY PURPOSE OTHER THAN THAT FOR WHICH IT IS BEING MADE AVAILABLE WITHOUT THE EXPRESS ADVANCE WRITTEN PERMISSION OF A DULY AUTHORIZED AGENT OF THE COMPANY. THIS DOCUMENT IS THE PROPERTY OF THE AVERY DENNISON CO. AND IS TO BE RETURNED TO THE COMPANY ON DEMAND.

HISTORY		
REV.	DATE	DESCRIPTION
A	06-23-14	RELEASED

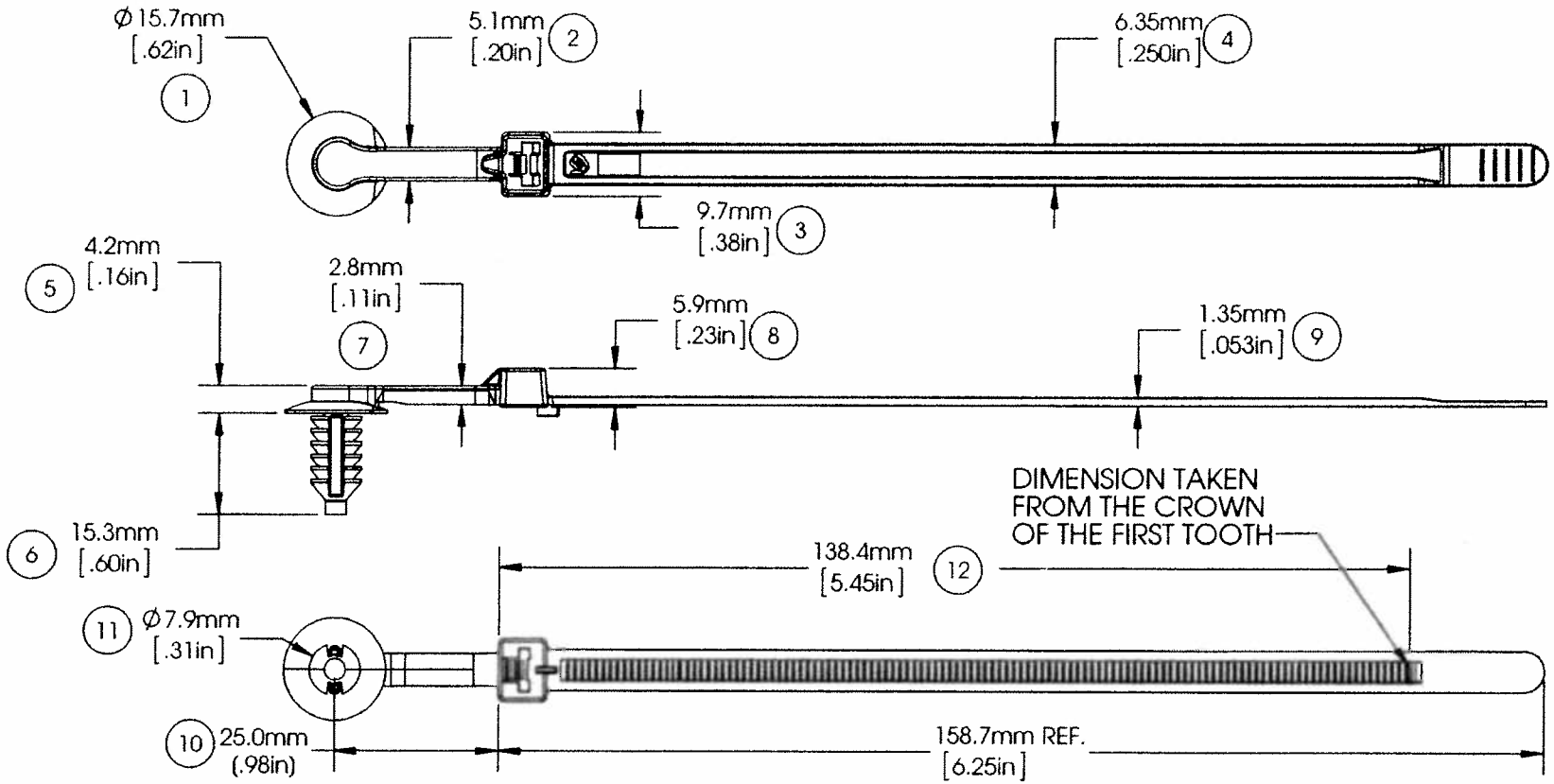

MOUNTING:	Ø6.60MM ± 0.25MM HOLE AND 6.35MM HEX HOLE. PANEL THICKNESS OF 0.7MM TO 7.0MM.
TENSILE STRENGTH:	50 LBF / 222.4N MIN.
TEMPERATURE RANGE:	-40°F (-40°C) TO 239°F (115°C) CONTINUOUS AND 257°F (125°C) AT MAXIMUM EXPOSURE
WEIGHT:	2.14 GRAMS EACH
BUNDLE DIAMETER:	Ø1/16"(1.6MM) TO Ø1- 1/2" (38.1MM)
INSTALLATION TOOL:	12001 - HAND TOOL 12500 - PNEUMATIC TOOL
TOOL TENSION SETTING:	6 - 8
PACKAGING:	1000/BAG, 5 BAGS/MASTER

APPROVALS:

ENG. APPR. 6-23-14

Q.A. APPR. 6-23-14

AVERY DENNISON
FASTENER DIVISION
FITCHBURG, MA 01420 U.S.A.
TEL 1-800-225-5913
FAX. 978-353-8157

SPECIFIED TOLERANCES

INCHES	MM
.XX ± .03	.X ± .7
.XXX ± .01	.XX ± .25

ANGULAR: ± 2°

MATERIAL: NYLON 6/6, IMPACT MODIFIED, HEAT STABILIZED

COLOR: GREY

DESCRIPTION: 25MM LIFT OFFSET TIE - REV.

STOCK NO. 20162-0

REV. A