AVERY DENNISON MARKETING SPECIFICATION

© 2021 AVERY DENNISON CORPORATION. ALL RIGHTS RESERVED

HISTORY		
REV.	DATE	DESCRIPTION
A	07.22.21	RELEASED

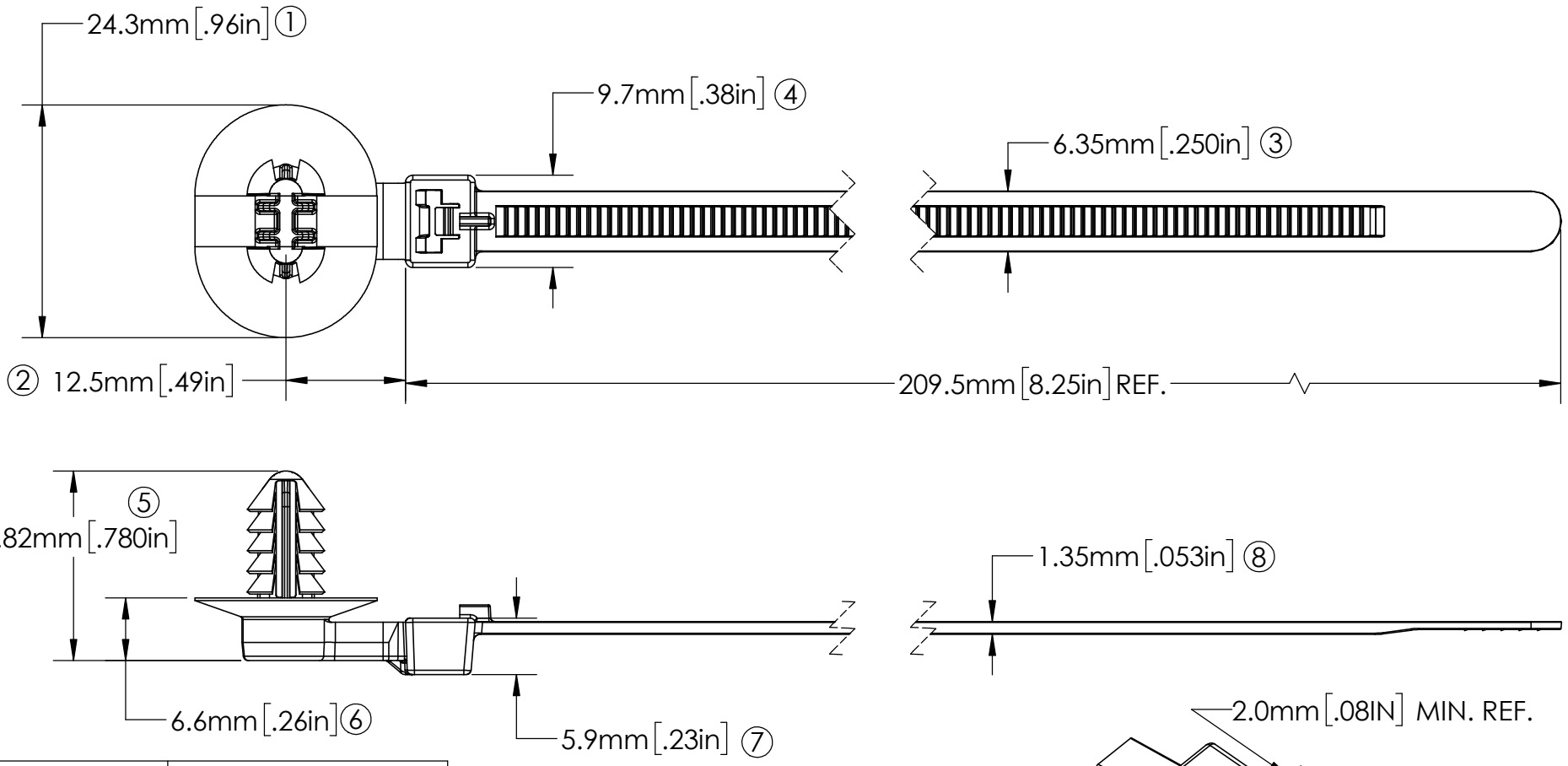

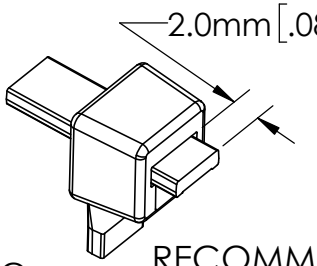

RECOMMENDED CUT LENGTH

⑨ △	FLAMMABILITY:	HB RATING PER FMVSS302
⑩ △	TENSILE STRENGTH:	50 lbf / 222N MIN.
	MOUNTING:	6.2mm X 12.2mm ;6.5mm X 12.5mm; 6.5mm X 13.0mm; 7.0mm X 12.0mm THICKNESS OF 0.6mm TO 7.0mm
	INSERTION:	10lbf / 44.5N MAX
	EXTRACTION:	25lbf per USCAR-44 NOM. FORCES: >40lbf /178N MIN
	OPERATING TEMP RANGE:	-40°F (-40°C) TO 239°F (115°C) CONTINUOUS AND 257°F (125°C) AT MAXIMUM EXPOSURE
	WEIGHT:	3.2g
	BUNDLE DIAMETER:	∅1.6mm TO ∅50.0mm
	TOOL:	12001 - HAND TOOL 12500 - PNEUMATIC TOOL
	TOOL TENSION SETTING:	6 - 8
	PACKAGING:	1000/BAG, 5BAGS/MASTER

NOTES:

1. THE (△) DENOTES A CRITICAL CHARACTERISTIC.

APPROVALS:

ENG. APPR.	D. Gilbertson	07.22.21
Q.A. APPR.	R. Estano	07.22.21

AVERY DENNISON
FASTENER DIVISION
FITCHBURG, MA 01420 U.S.A.
TEL. 1-800-225-5913
FAX. 978-353-8157

SPECIFIED TOLERANCES ARE:

.XX ± .03 INCHES .X ± .7 mm
.XXX ± .010 INCHES .XX ± .25 mm
ANGULAR: ± 2°

MATERIAL NYLON 6/6, IMPACT MODIFIED, HEAT STAB.

COLOR BLACK

DESCRIPTION OVAL FIR TREE OFFSET TIE, 12.5mm, STD, IMHS

STOCK NO. **20289-0**

REV. **A**

5 4 3 2 1