IQS9151EV02 User Guide

IQ Switch®- ProxSense®



Copyright © Azoteq 2024
All Rights Reserved

Contents

1 Introduction 3

2 Setting Up the IQS9151 Trackpad Module 4

3 Trackpad Module Design 5

Copyright © Azoteq 2024
All Rights Reserved

1 Introduction

This user guide describes the operation of the IQS9151EV02 evaluation kit. The EV-Kit consists of two parts:

- IQS9151 trackpad x 1
- DS200 x 1

To visualise all sensor data from the EV-Kit, the module board can be interfaced to any Windows PC with USB support, along with the DS200 and the relevant IQS9151 Graphical User Interface (GUI) software available to download from the Azoteq website. The purpose of the IQS9151EV02 EV-Kit is to help application and development engineers in evaluating the IC's capabilities. A picture of the trackpad module from the evaluation kit is shown below in Figure 1.1.



Figure 1.1: IQS9151EV02 EV Kit

Download the GUI from Azoteq's website.

The GUI can be found in the following section:

- Design Support → Software
- Click on the *IQS9151 Debug and Display Tool* hyperlink to download the GUI.
- Install GUI on PC.
- Connect the DS200 to the PC with a USB Type-C data cable.

Copyright © Azoteq 2024
All Rights Reserved

2 Setting Up the IQS9151 Trackpad Module

To interface the IQS9151 trackpad module to a PC we advise using the DS200. This module is set up in mutual capacitive mode. This EV-Kit can be set up with the following steps:

- Plug the module into the DS200 via ribbon cable.
- Run the IQS9151 GUI.
- Click *START STREAMING* button.
- Data should now stream to the GUI.
- Click *ACK RESET* button.
- GUI should look as follow.

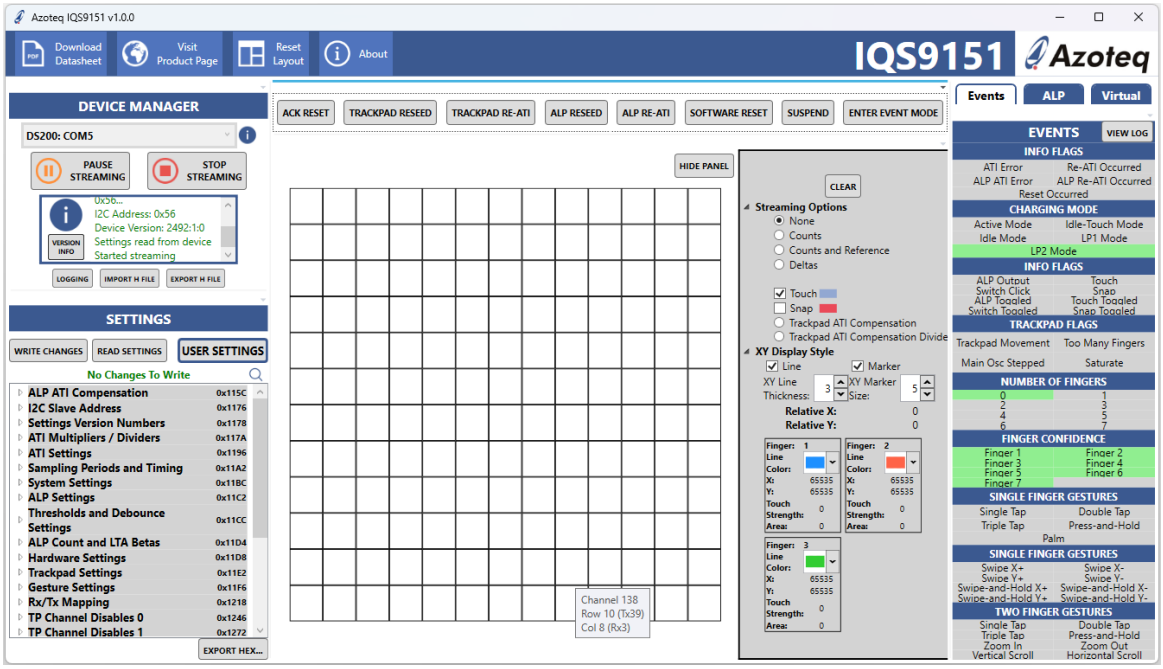

Figure 2.1: IQS9151 Streaming

Please note the following items while evaluating the IQS9151 trackpad module:

- Streaming channel data reduces the report rate of the trackpad, after evaluating the channel information (such as counts), it is recommended setting the Streaming Options to None.
- The trackpad XY output will be plotted onto the central channel canvas area.
- Numerous trackpad output and information, such as 1 and 2 finger gestures, can be seen on the ‘Events’ tab on the right side of the window.
- When the system transitions to LP1 and LP2, the low-power channel is active. To visualise its’ data, switch to the ‘ALP’ tab on the right panel.
- To start adjusting/experimenting with the on-chip settings, press the *USER SETTINGS* button on the left side to open the pop-up settings window.
- Note: To reset the module back to the predefined settings, simply press *STOP STREAMING* and then *START STREAMING*.

After evaluating click *STOP STREAMING* button.

Copyright © Azoteq 2024
All Rights Reserved

3 Trackpad Module Design

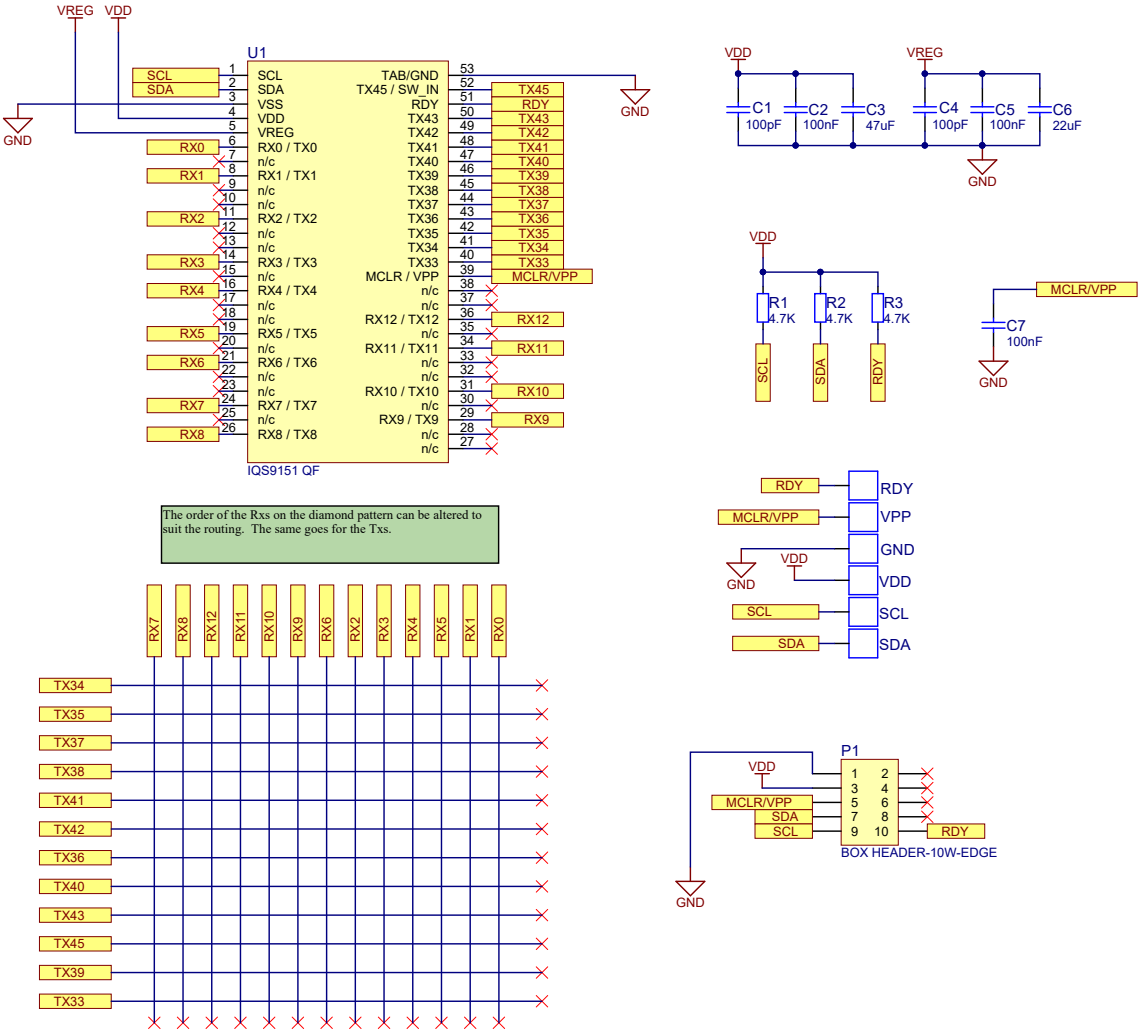

Figure 3.1: IQS9151 Trackpad Schematic

Contact Information

	South Africa (Headquarters)	China
Physical Address	1 Bergsig Avenue Paarl 7646 South Africa	Room 501A, Block A T-Share International Centre Taoyuan Road, Nanshan District Shenzhen, Guangdong, PRC
Tel	+27 21 863 0033	+86 755 8303 5294 ext 808
Email	info@azoteq.com	info@azoteq.com

	USA	Taiwan
Physical Address	7000 North Mopac Expressway Suite 200 Austin TX 78731 USA	Xintai 5th Road, Sec. 1 No. 99, 9F-12C Xizhi District 221001 New Taipei City Taiwan
Tel	+1 512 538 1995	+886 932 219 444
Email	info@azoteq.com	info@azoteq.com

Visit www.azoteq.com
for a list of distributors and worldwide representation.

Patents as listed on www.azoteq.com/patents-trademarks/ may relate to the device or usage of the device.

Azoteq®, Crystal Driver®, IQ Switch®, ProxSense®, ProxFusion®, LightSense™, SwipeSwitch™, Dycal™, TriggerMax™, WearMax™, and the logo are trademarks of Azoteq.

The information in this Datasheet is believed to be accurate at the time of publication. Azoteq uses reasonable effort to maintain the information up-to-date and accurate, but does not warrant the accuracy, completeness or reliability of the information contained herein. All content and information are provided on an “as is” basis only, without any representations or warranties, express or implied, of any kind, including representations about the suitability of these products or information for any purpose. Azoteq disclaims all warranties and conditions with regard to these products and information, including but not limited to all implied warranties and conditions of merchantability, fitness for a particular purpose, title and non-infringement of any third party intellectual property rights. Azoteq assumes no liability for any damages or injury arising from any use of the information or the product or caused by, without limitation, failure of performance, error, omission, interruption, defect, delay in operation or transmission, even if Azoteq has been advised of the possibility of such damages. The applications mentioned herein are used solely for the purpose of illustration and Azoteq makes no warranty or representation that such applications will be suitable without further modification, nor recommends the use of its products for application that may present a risk to human life due to malfunction or otherwise. Azoteq products are not authorized for use as critical components in life support devices or systems. No licenses to patents are granted, implicitly, express or implied, by estoppel or otherwise, under any intellectual property rights. In the event that any of the abovementioned limitations or exclusions does not apply, it is agreed that Azoteq’s total liability for all losses, damages and causes of action (in contract, tort (including without limitation, negligence) or otherwise) will not exceed the amount already paid by the customer for the products. Azoteq reserves the right to alter its products, to make corrections, deletions, modifications, enhancements, improvements and other changes to the content and information, its products, programs and services at any time or to move or discontinue any contents, products, programs or services without prior notification. For the most up-to-date information and binding Terms and Conditions please refer to www.azoteq.com.