U-GAGE™ S18U Series Sensor with Analog Outputs

Datasheet

18 mm Ultrasonic Sensors with TEACH-mode programming

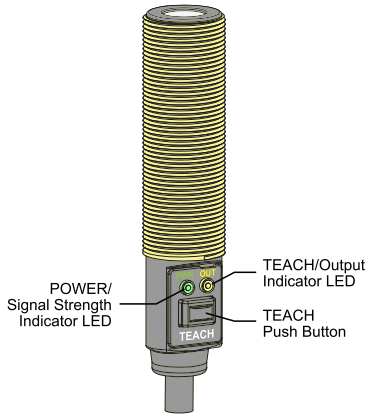

- Fast, easy-to-use TEACH-Mode programming; no potentiometer adjustments
- Short dead zone
- Scalable output automatically distributes the output signal over the width of the programmed sensing window
- Two bi-colored status LEDs
- Rugged encapsulated design for harsh environments
- Choose 2-meter or 9-meter unterminated cable, or 5-pin M12 quick-disconnect connector
- Wide operating range of –20 °C to +60 °C (–4 °F to +140 °F)
- Choose either straight or right-angle housing
- Temperature compensation
- Selectable response times of 2.5 ms or 30 ms
- Select analog models with either 0 V DC to 10 V DC or 4 mA to 20 mA output

WARNING:

- **Do not use this device for personnel protection**
- Using this device for personnel protection could result in serious injury or death.
- This device does not include the self-checking redundant circuitry necessary to allow its use in personnel safety applications. A device failure or malfunction can cause either an energized (on) or de-energized (off) output condition.

Models

Model Number	Sensing Range	Cable[1]	Supply Voltage	Output	Housing Configuration
S18UUA	30 mm to 300 mm (1.2 in to 11.8 in)	5-wire, 2 m (6.5 ft) cable	10 V DC to 30 V DC	0 V DC to 10 V DC	Straight
S18UUAQ		5-pin M12 quick-disconnect connector			
S18UIA		5-wire, 2 m (6.5 ft) cable		4 mA to 20 mA	
S18UIAQ		5-pin M12 quick-disconnect connector			
S18UUAR		5-wire, 2 m (6.5 ft) cable		0 V DC to 10 V DC	Right-Angle
S18UUARQ		5-pin M12 quick-disconnect connector			
S18UIAR		5-wire, 2 m (6.5 ft) cable		4 mA to 20 mA	
S18UIARQ		5-pin M12 quick-disconnect connector			

NOTE: Information about discrete models is available at http://www.bannerengineering.com.

(1)

- 9 m cables are available by adding suffix "**W/30**" to the model number of any cabled sensor (for example, **S18UUA W/30**).
- A model with a quick-disconnect connector requires a mating cable.

© Banner Engineering Corp.

Configuration Instructions

Status Indicators

Power On/Off LED State	Indicates
Off	The power is off
On red	The target is weak or is outside of the sensing range
On green	The sensor is operating normally, target is good

Output/Teach LED State	Indicates
Off	The target is outside of the window limits
On yellow	The target is within the window limits
On red	The sensor is in TEACH mode and is waiting for the first limit
Flashing red	The sensor is in TEACH mode and is waiting for the second limit

Sensor Programming

Use one of two TEACH methods to program the sensor:

- Teach individual minimum and maximum limits
- Use Auto-Window feature to center a sensing window around the taught position

The sensor may be programmed either via its push button, or via a remote switch. Remote programming also may be used to disable the push button, preventing unauthorized personnel from adjusting the programming settings. To access this feature, connect the gray wire of the sensor to 0 V DC to 2 V DC, with a remote programming switch between the sensor and the voltage.

NOTE: The impedance of the Remote Teach input is 12 kΩ.

Programming is accomplished by following the sequence of input pulses. The duration of each pulse (corresponding to a push button “click”), and the period between multiple pulses, are defined as “T”: **0.04 seconds < T < 0.8 seconds**.

TEACH Interface

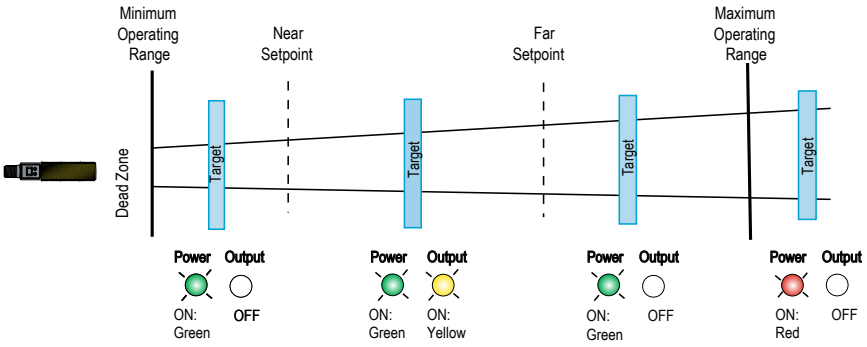

Analog Output Slope

The U-GAGE S18U sensor may be programmed for either a positive or a negative output slope, based on which limit is taught first. If the Near limit is taught first, the slope will be positive. If the Far limit is taught first, the slope will be negative. Banner’s scalable output automatically distributes the output signal over the width of the programmed sensing window.

In the event of signal loss, the analog output goes to 3.6 mA or 0 V DC, which may be used to trigger an alarm.

© Banner Engineering Corp. All rights reserved.

Analog Output Slope—Current-Sourcing Models

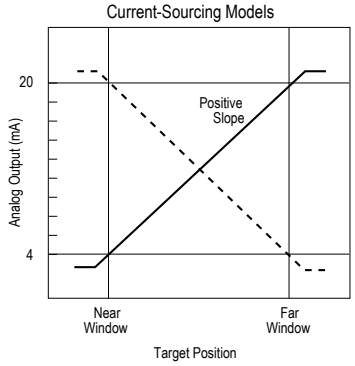

Analog Output Slope—Voltage-Sourcing Models

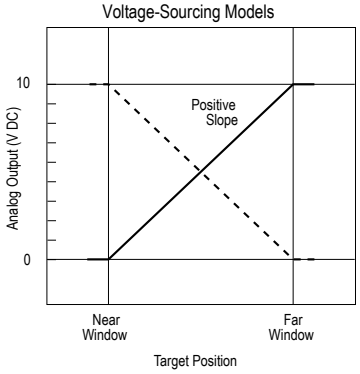

Teach Minimum and Maximum Limits

NOTE:
- The sensor returns to Run mode if the first Teach condition is not registered within 120 seconds
- After the first limit is taught, the sensor remains in Program mode until the Teach sequence is finished
- To exit Program mode without saving any changes, press and hold the programming push button > 2 seconds (before teaching the second limit). The sensor reverts to the last saved limits

1. Enter Programming mode.

Method	Action	Result
Push Button(1)	Press and hold the TEACH button	Output LED: On red Power LED: On green (good signal) or On red (no signal)
Remote Input(2)	No action required; the sensor is ready for the first limit	

2. Present the target for the first limit. The Power LED must be On green.
3. Teach the first limit.

Method	Action	Result
Push Button	Press the TEACH button one time.	**Teach Accepted** (The sensor learns the 0 V DC or 4 mA limit) Output LED: Flashes Red
Remote Input	Single-pulse the remote line.	**Teach Not Accepted** Output LED: On Red

4. Present the target for the second limit. The Power LED must be On green.
5. Teach the second limit.

Method	Action	Result
Push Button	Press the TEACH button one time.	**Teach Accepted** (The sensor learns the 10 V DC or 20 mA limit) Output LED: Yellow or OFF
Remote Input	Single-pulse the remote line.	**Teach Not Accepted** Output LED: Flashes Red

Teaching Limits Using the Auto-Window Feature

Teaching the same limit twice for the same output automatically centers a 10 mm window on the taught position.

(1) 0.04 s < “click” < 0.8 s
(2) 0.04 s < T < 0.8 s

© Banner Engineering Corp. All rights reserved.

NOTE:
- The sensor returns to Run mode if the first Teach condition is not registered within 120 seconds
- After the first limit is taught, the sensor remains in Program mode until the Teach sequence is finished
- To exit Program mode without saving any changes, press and hold the programming push button > 2 seconds (before teaching the second limit). The sensor reverts to the last saved limits
- Using this procedure, the analog output is centered on the taught position at approximately 5 V DC or 12 mA

1. Enter Programming mode.

Method	Action	Result
Push Button[1]	Press and hold the TEACH button	Output LED: On red Power LED: On green (good signal) or On red (no signal)
Remote Input[2]	No action required; the sensor is ready for the first limit	

2. Position the target for the center of the window. The Power LED must be On green.
3. Teach the limit.

Method	Action	Result
Push Button	Press the TEACH button one time.	**Teach Accepted** Output LED: Flashing Red
Remote Input	Single-pulse the remote line.	**Teach Not Accepted** Output LED: ON Red

4. Teach the limit a second time.

Method	Action	Result
Push Button	Without moving the target, press the TEACH button one time.	**Teach Accepted** Output LED: Yellow or OFF
Remote Input	Without moving the target, single-pulse the remote line.	**Teach Not Accepted** Output LED: Flashing Red

Set the Response Speed

The default sensor response speed is 30 ms. A faster response speed (2.5 ms) is selectable via the input wire. The response speed can be further configured via push button or remote input.

Refer to the following table for response speeds and selections. Slow response speed improves immunity to the presence of strong ultrasonic targets positioned just beyond the operating range of the sensor. A slower response speed allows the sensor to ignore these unexpected targets.

Input Wire (Black)	Fast (5-Click)	Slow (6-Click)
5 V DC to 30 V DC (fast)	2.5 ms	5 ms
0 V DC to 2 V DC (slow)	30 ms	60 ms

Fast Response Speed

Method	Action	Result
Push Button	Press the TEACH button five times.	The response speed is set at Fast.
Remote Input	Five-pulse the remote line.	

Slow Response Speed

Method	Action	Result
Push Button	Press the TEACH button six times.	The response speed is set at Slow.
Remote Input	Six-pulse the remote line.	

[1] 0.04 s < “click” < 0.8 s
[2] 0.04 s < T < 0.8 s

© Banner Engineering Corp. All rights reserved.

Lock the Buttons

Enable or disable the buttons to prevent unauthorized adjustment of the program settings.

To lock or unlock the buttons, four-pulse the remote line. The buttons are enabled or disabled, depending on the previous condition.

Installation

Principles of Operation

Ultrasonic sensors emit one or multiple pulses of ultrasonic energy, which travel through the air at the speed of sound. A portion of this energy reflects off the target and travels back to the sensor. The sensor measures the total time required for the energy to reach the target and return to the sensor. The distance to the object is then calculated using the following formula: **D = ct ÷ 2**

D = distance from the sensor to the target
c = speed of sound in air
t = transit time for the ultrasonic pulse

To improve accuracy, an ultrasonic sensor may average the results of several pulses before outputting a new value.

Temperature Effects

The speed of sound is dependent upon the composition, pressure, and temperature of the gas in which it is traveling. For most ultrasonic applications, the composition and pressure of the gas are relatively fixed, while the temperature may fluctuate.

In air, the speed of sound varies with temperature according to the following approximation:

In metric units:	$C_{m/s} = 20\sqrt{273 + T_C}$	In English units:	$C_{ft/s} = 49\sqrt{460 + T_F}$
$C_{m/s}$ = speed of sound in meters per second		$C_{ft/s}$ = speed of sound in feet per second	
T_C = temperature in °C		T_F = temperature in °F	

Temperature Compensation

Changes in air temperature affect the speed of sound, which in turn affects the distance reading measured by the sensor. An increase in air temperature shifts both sensing window limits closer to the sensor. Conversely, a decrease in air temperature shifts both limits farther away from the sensor. This shift is approximately 3.5% of the limit distance for a 20° C change in temperature.

The S18U series ultrasonic sensors are temperature compensated. This reduces the error due to temperature by about 90%. The sensor will maintain its window limits to within 1.8% over the -20° to +60° C (−4° to +140° F) range.

NOTE:

- Exposure to direct sunlight can affect the sensor’s ability to accurately compensate for changes in temperature.
- If the sensor is measuring across a temperature gradient, the compensation will be less effective.
- The temperature warmup drift upon power-up is less than 1.7% of the sensing distance.After 10 minutes, the apparent distance will be within 0.3% of the actual position. After 25 minutes, the sensing position will be stable.

© Banner Engineering Corp. All rights reserved.

Wiring Diagrams

Cabled Models

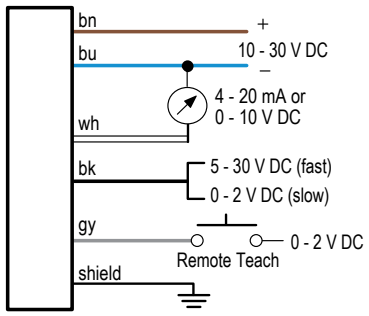

QD Models

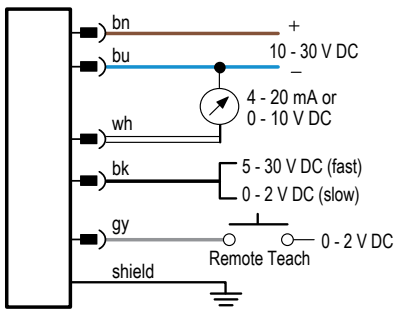

NOTE: It is recommended that the shield wire be connected to earth ground or DC common.

S18U Specifications

Sensing Range
30 to 300 mm (1.2 in to 11.8 in)

Supply Voltage
10 V DC to 30 V DC (10% maximum ripple); 20 mA max. (exclusive of load), 40 mA typical @ 25V input

Ultrasonic Frequency
300 kHz, rep. rate 2.5 ms

Supply Protection Circuitry
Protected against reverse polarity and transient voltages

Output Configuration
Analog Output: 0 to 10 V DC or 4 to 20 mA, depending on model

Output Protection
Protected against short circuit conditions

Delay at Power-Up
300 milliseconds

Temperature Effect
0.02% of distance/ °C

Connections
2 m (6.5 ft) or 9 m (30 ft) shielded 5-conductor (with drain) PVC jacketed attached cable or 5-pin M12 quick-disconnect connector

Linearity[1]
2.5 ms response: ±1 mm
30 ms response: ± 0.5 mm

Resolution[1]
2.5 ms response: 1 mm
30 ms response: 0.5 mm

Output Response Time (for a 95% step change)
2.5 milliseconds: Black wire at 5 to 30 V DC
30 milliseconds: Black wire at 0 to 2 V DC (or open)
Contact Banner Engineering for other response speed options

Operating Conditions
Temperature: –20 °C to +60 °C (–4 °F to +140 °F)

Temperature Warmup Drift
Less than 1.7% of sensing distance upon power-up (see Temperature Compensation)

[1] Linearity and resolution are specified using a 50 mm x 50 mm (2" x 2") aluminum plate at 22°C under fixed sensing conditions

Environmental Rating
Leakproof design is rated IP67; NEMA 6P

Vibration and Mechanical Shock
All models meet MIL-STD-202F, Method 201A (Vibration: 10 Hz to 60 Hz maximum, 0.06 inch (1.52 mm) double amplitude, 10G maximum acceleration) requirements. Also meets IEC 60947-5-2 (Shock: 30G 11 ms duration, half sine wave) requirements.

Application Notes
Objects passing inside the specified near limit may produce a false response.

Certifications

Remote TEACH Input
Impedance: 12 kΩ

Construction
Threaded Barrel: Thermoplastic polyester
Push Button: Santoprene
Push Button Housing: ABS/PC
Lightpipes: Acrylic

Minimum Window Size
5 mm

Adjustments
Sensing window limits: TEACH-Mode programming of near and far window limits may be set using the push button or remotely via TEACH input

Indicators
Range Indicator (Red/Green)
Green—Target is within sensing range
Red—Target is outside sensing range
OFF—Sensing power is OFF

Teach/Output Indicator (Amber/Red)
Yellow—Target is within taught limits
OFF—Target is outside taught window limits
Red—Sensor is in TEACH mode

© Banner Engineering Corp. All rights reserved.

Output Ratings

Analog Voltage Output:

2.5 kΩ minimum load resistance
Minimum supply for a full 10V output is 12V DC (for supply voltages between 10 and 12, V out max is at least V supply -2)

Analog Current Output:

1 kΩ max @ 24V input
Max load resistance = (Vcc-4)/0.02 ohms

For current output (4-20 mA) models, ideal results are achieved when the total load resistance R = [(Vin – 3)/0.020] Ω. Example, at Vin = 24 V DC, R ≈ 1 kΩ (1 watt). A worst-case shift of 1% of sensing distance is caused by operating the sensor at Vin = 30 V DC and R = 0 Ω.

Required Overcurrent Protection

WARNING: Electrical connections must be made by qualified personnel in accordance with local and national electrical codes and regulations.

Overcurrent protection is required to be provided by end product application per the supplied table.

Overcurrent protection may be provided with external fusing or via Current Limiting, Class 2 Power Supply.

Supply wiring leads < 24 AWG shall not be spliced.

For additional product support, go to www.bannerengineering.com.

Supply Wiring (AWG)	Required Overcurrent Protection (A)	Supply Wiring (AWG)	Required Overcurrent Protection (A)
20	5.0	26	1.0
22	3.0	28	0.8
24	1.0	30	0.5

Dimensions

Straight Housing

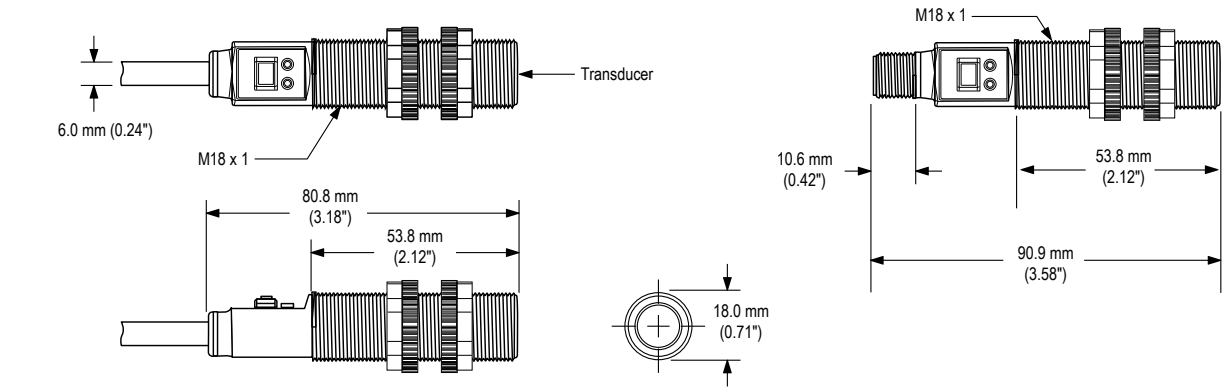

Right-Angle Housing

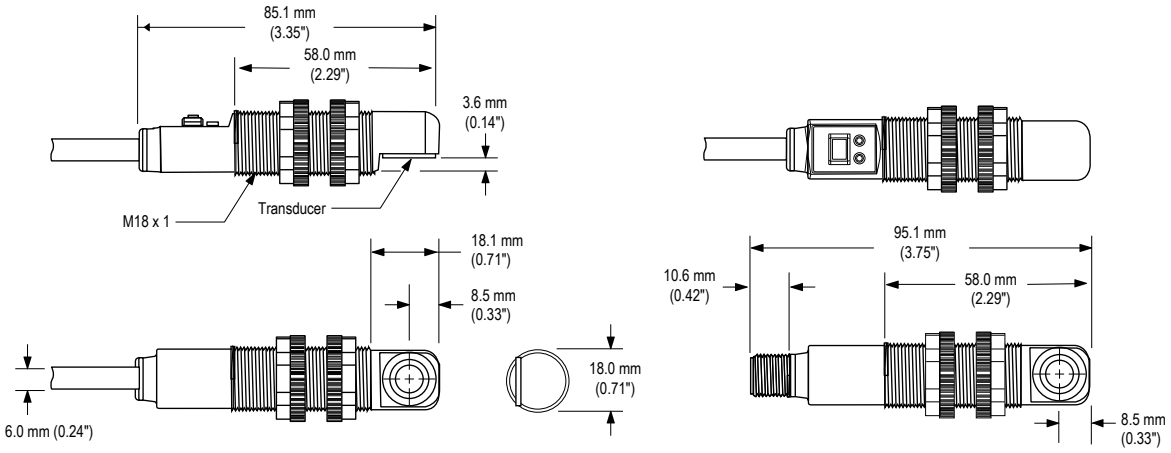

© Banner Engineering Corp. All rights reserved.

Response Curves

Effective Beam Pattern (Typical)

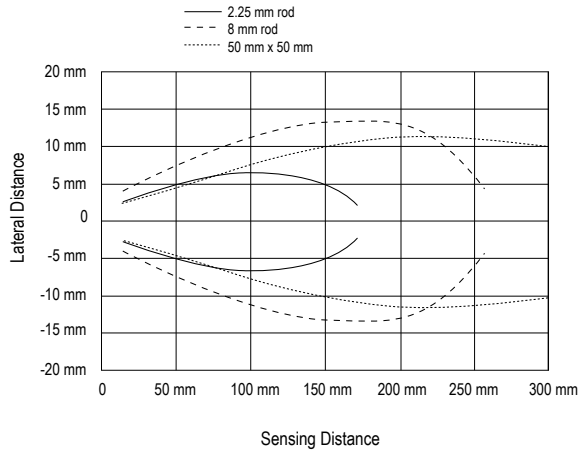

Maximum Target Rotation Angle

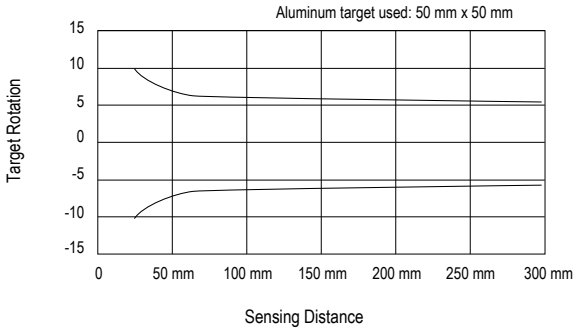

Accessories

Quick-Disconnect Cables

5-Pin Threaded M12 Cordsets with Shield—Single Ended				
Model	**Length**	**Style**	**Dimensions**	**Pinout (Female)**
MQDEC2-506	2 m (6.56 ft)	Straight	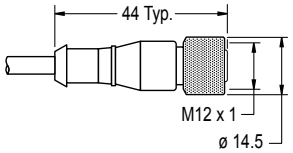	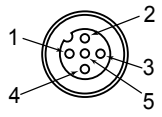 1 = Brown 2 = White 3 = Blue 4 = Black 5 = Gray
MQDEC2-515	5 m (16.4 ft)			
MQDEC2-530	9 m (29.5 ft)			
MQDEC2-550	15 m (49.2 ft)			
MQDEC2-575	23 m (75.44 ft)			
MQDEC2-5100	30.5 m (100 ft)			
MQDEC2-506RA	2 m (6.56 ft)	Right-Angle	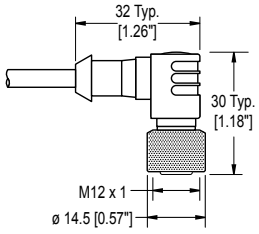	
MQDEC2-515RA	5 m (16.4 ft)			
MQDEC2-530RA	9 m (29.5 ft)			
MQDEC2-550RA	15 m (49.2 ft)			
MQDEC2-575RA	23 m (75.44 ft)			
MQDEC2-5100RA	31 m (101.68 ft)			

Brackets

SMB18A

- Right-angle mounting bracket with a curved slot for versatile orientation
- 12-ga. stainless steel
- 18 mm sensor mounting hole
- Clearance for M4 (#8) hardware

Hole center spacing: A to B = 24.2
Hole size: A = ø 4.6, B = 17.0 × 4.6, C = ø 18.5

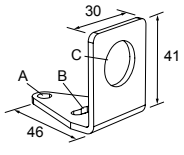

© Banner Engineering Corp. All rights reserved.

SMB18SF

- 18 mm swivel bracket with M18 × 1 internal thread
- Black thermoplastic polyester
- Stainless steel swivel locking hardware included

Hole center spacing: A = 36.0
Hole size: A = ø 5.3, B = ø 18.0

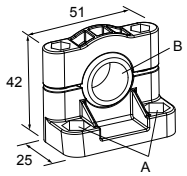

SMB18UR

- 2-piece universal swivel bracket
- 300 series stainless steel
- Stainless steel swivel locking hardware included
- Mounting hole for 18 mm sensor

Hole center spacing: A = 25.4, B = 46.7
Hole size: B = 6.9 × 32.0, C = ø 18.3

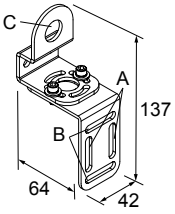

Banner Engineering Corp Limited Warranty

Banner Engineering Corp. warrants its products to be free from defects in material and workmanship for one year following the date of shipment. Banner Engineering Corp. will repair or replace, free of charge, any product of its manufacture which, at the time it is returned to the factory, is found to have been defective during the warranty period. This warranty does not cover damage or liability for misuse, abuse, or the improper application or installation of the Banner product.

THIS LIMITED WARRANTY IS EXCLUSIVE AND IN LIEU OF ALL OTHER WARRANTIES WHETHER EXPRESS OR IMPLIED (INCLUDING, WITHOUT LIMITATION, ANY WARRANTY OF MERCHANTABILITY OR FITNESS FOR A PARTICULAR PURPOSE), AND WHETHER ARISING UNDER COURSE OF PERFORMANCE, COURSE OF DEALING OR TRADE USAGE.

This Warranty is exclusive and limited to repair or, at the discretion of Banner Engineering Corp., replacement. **IN NO EVENT SHALL BANNER ENGINEERING CORP. BE LIABLE TO BUYER OR ANY OTHER PERSON OR ENTITY FOR ANY EXTRA COSTS, EXPENSES, LOSSES, LOSS OF PROFITS, OR ANY INCIDENTAL, CONSEQUENTIAL OR SPECIAL DAMAGES RESULTING FROM ANY PRODUCT DEFECT OR FROM THE USE OR INABILITY TO USE THE PRODUCT, WHETHER ARISING IN CONTRACT OR WARRANTY, STATUTE, TORT, STRICT LIABILITY, NEGLIGENCE, OR OTHERWISE.**

Banner Engineering Corp. reserves the right to change, modify or improve the design of the product without assuming any obligations or liabilities relating to any product previously manufactured by Banner Engineering Corp. Any misuse, abuse, or improper application or installation of this product or use of the product for personal protection applications when the product is identified as not intended for such purposes will void the product warranty. Any modifications to this product without prior express approval by Banner Engineering Corp will void the product warranties. All specifications published in this document are subject to change; Banner reserves the right to modify product specifications or update documentation at any time. Specifications and product information in English supersede that which is provided in any other language. For the most recent version of any documentation, refer to: www.bannerengineering.com.

For patent information, see www.bannerengineering.com/patents.

© Banner Engineering Corp. All rights reserved.