T18 Series Sensors (AC Voltage)

Datasheet

For complete technical information about this product, including dimensions, accessories, and specifications, see *http://www.bannerengineering.com* and search for your model number. See also document 121525.



WARNING: Not To Be Used for Personnel **Protection**

Never use this device as a sensing device for personnel **protection.** Doing so could lead to serious injury or death. This device does not include the self-checking redundant circuitry necessary to allow its use in personnel safety applications. A sensor failure or malfunction can cause either an energized or de-energized sensor output condition.

Models

Models [1]	Sensing Mode	Range	LED	Output
T183E	Opposed	20 m (66 ft)	Infrared, 950 nm	-
T18AW3R				LO
T18RW3R				DO
T18AW3L	Retroreflective with Gain Control	2 m (79 in) [2]		LO
T18RW3L				DO
T18AW3LP	Polarized Retroreflective		Visible Red, 680 nm	LO
T18RW3LP				DO
T18AW3D	Diffuse with Gain Control	300 mm (12 in)	Infrared, 880 nm	LO
T18RW3D				DO
T18AW3FF25	Fixed Field	25 mm (1 in) Cutoff		LO
T18RW3FF25				DO
T18AW3FF50		50 mm (2 in) Cutoff		LO
T18RW3FF50				DO
T18AW3FF100		100 mm (4 in) Cutoff		LO
T18RW3FF100				DO

Wiring

Cabled **Emitters**

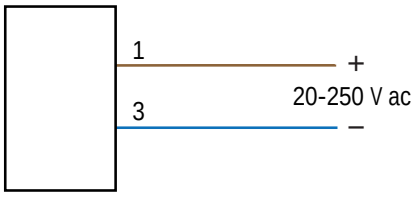

All Other Cabled Models

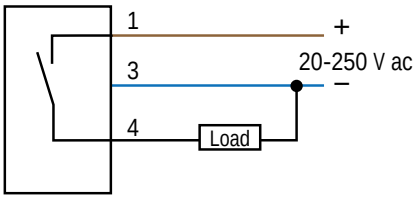

Key

1. Brown
2. White
3. Blue
4. Black

[1] Standard 2 m (6.5 ft) cable models are listed.
- To order the 9 m (30 ft) cable models, add suffix W/30 (for example, T183E W/30).
- To order the 4-pin Micro-style QD models, add suffix Q1 (for example, T183EQ1). A model with a QD connector requires a mating cable.

[2] Use polarized models when shiny objects will be sensed.

4-pin Micro-style QD **Emitters**	All Other Micro-style QD Models

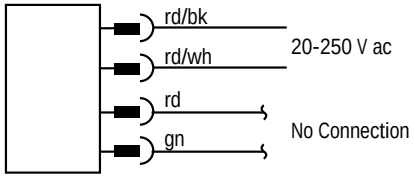

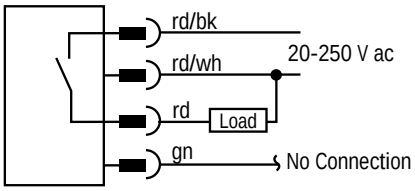

Dimensions

Cabled Models	QD Models

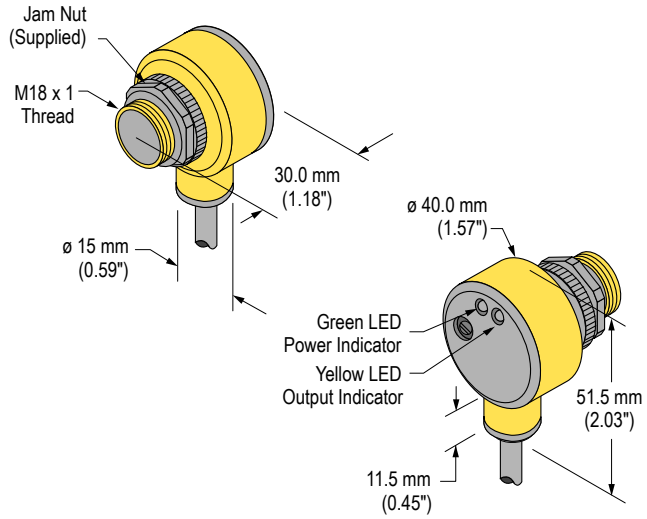

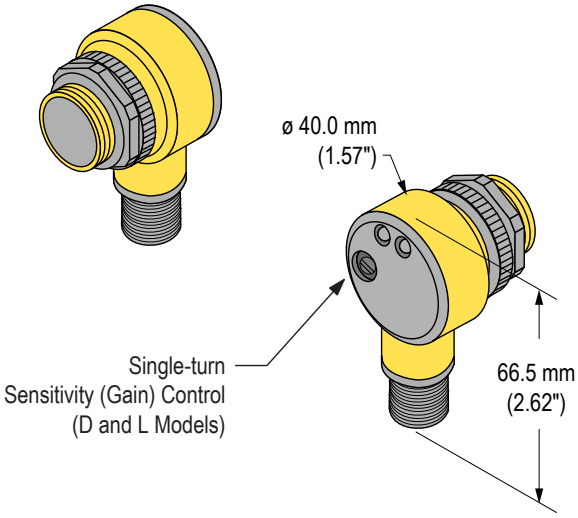

Specifications

Supply Voltage and Current
- 20 to 250 V ac (50/60 Hz)
- Average current: 20 mA
- Peak current: 200 mA at 20 V ac, 500 mA at 120 V ac, 750 mA at 250 V ac

Supply **Protection** Circuitry
- Protected against reverse polarity and transient voltages

Output **Configuration**
- SPST solid-state ac switch; Three-wire connections; Choose light operate or dark operate models
- Light Operate: Output conducts when sensor sees its own (or the emitter's) modulated light
- Dark Operate: Output conducts when the sensor sees dark

Output **Rating**
- 300 mA maximum (continuous)
- Fixed-field models: derate 5 mA/°C above +50 °C (+122 °F)
- Inrush Capability 1 amp for 20 milliseconds, non-repetitive
- OFF-state leakage current: < 100 microamps
- ON-state saturation voltage: 3 V at 300 mA ac; 2 V at 15 mA ac

Output **Protection** Circuitry
- Protected against false pulse on power-up

Output Response Time
- Opposed mode models: 16 ms ON, 8 ms OFF
- Other models: 16 ms ON and OFF
- NOTE: 100 ms delay on power-up

Repeatability
- Opposed mode models: 2 ms
- Other models: 4 ms
- Repeatability and response are independent of signal strength.

Adjustments
- Non-polarized retroreflective and diffuse models (only) have a single-turn rear-panel sensitivity control (turn clockwise to increase gain)

Indicators
- Two LEDs (green and amber)
- Green on: power to sensor is on
- Amber on: sensor sees light
- Amber flashing: excess gain marginal (1 to 1.5×) in light condition

Construction
- Housing: PBT polyester housing
- Lens: polycarbonate (opposed-mode) or acrylic (other models)

Connections
- 2 m (6.5 ft) integral cable; 9 m (30 ft) integral cable; or 4-pin Micro-style quick-disconnect fitting

Environmental **Rating**

Leakproof design rated NEMA 6P and IEC IP67 per IEC 60529
IP69K per DIN40050 for quick disconnect and cable models when the cables are protected from direct spray

Operating Conditions

–40 °C to +70 °C (–40 °F to +158 °F)
90% at +50 °C maximum relative humidity (non-condensing)

Vibration and Mechanical Shock

All models meet Mil. Std. 202F requirements. Method 201A (Vibration; frequency 10 Hz to 60 Hz, max., double amplitude 0.06 inch acceleration 10G). Method 213B conditions H&I.
Shock: 75G with unit operating; 100G for non-operation

Certifications

Required Overcurrent **Protection**

WARNING: Electrical connections must be made by qualified personnel in accordance with local and national electrical codes and regulations.

Overcurrent protection is required to be provided by end product application per the supplied table.
Overcurrent protection may be provided with external fusing or via Current Limiting, Class 2 Power Supply.
Supply wiring leads < 24 AWG shall not be spliced.
For additional product support, go to *http://www.bannerengineering.com*.

Supply Wiring (AWG)	Required Overcurrent **Protection** (Amps)
20	5.0
22	3.0
24	2.0
26	1.0
28	0.8
30	0.5

Accessories

4-Pin Micro-Style Cordsets

Model	Length	Style	Dimensions	Pinout (Female)
MQAC-406	1.83 m (6 ft)	Straight	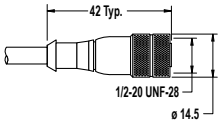	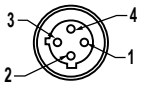 1 = Red/Black 2 = Red/White 3 = Red 4 = Green
MQAC-415	4.57 m (15 ft)			
MQAC-430	9.14 m (30 ft)			
MQAC-406RA	1.83 m (6 ft)	Right-Angle	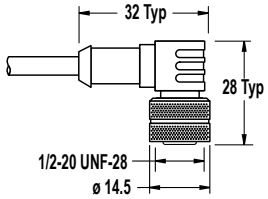	
MQAC-415RA	4.57 m (15 ft)			
MQAC-430RA	9.14 m (30 ft)			

Banner Engineering Corp. Limited Warranty

Banner Engineering Corp. warrants its products to be free from defects in material and workmanship for one year following the date of shipment. Banner Engineering Corp. will repair or replace, free of charge, any product of its manufacture which, at the time it is returned to the factory, is found to have been defective during the warranty period. This warranty does not cover damage or liability for misuse, abuse, or the improper application or installation of the Banner product.

THIS LIMITED WARRANTY IS EXCLUSIVE AND IN LIEU OF ALL OTHER WARRANTIES WHETHER EXPRESS OR IMPLIED (INCLUDING, WITHOUT LIMITATION, ANY WARRANTY OF MERCHANTABILITY OR FITNESS FOR A PARTICULAR PURPOSE), AND WHETHER ARISING UNDER COURSE OF PERFORMANCE, COURSE OF DEALING OR TRADE USAGE.

This Warranty is exclusive and limited to repair or, at the discretion of Banner Engineering Corp., replacement. IN NO EVENT SHALL BANNER ENGINEERING CORP. BE LIABLE TO BUYER OR ANY OTHER PERSON OR ENTITY FOR ANY EXTRA COSTS, EXPENSES, LOSSES, LOSS OF PROFITS, OR ANY INCIDENTAL, CONSEQUENTIAL OR SPECIAL DAMAGES RESULTING FROM ANY PRODUCT DEFECT OR FROM THE USE OR INABILITY TO USE THE PRODUCT, WHETHER ARISING IN CONTRACT OR WARRANTY, STATUTE, TORT, STRICT LIABILITY, NEGLIGENCE, OR OTHERWISE.

Banner Engineering Corp. reserves the right to change, modify or improve the design of the product without assuming any obligations or liabilities relating to any product previously manufactured by Banner Engineering Corp. Any misuse, abuse, or improper application or installation of this product or use of the product for personal protection applications when the product is identified as not intended for such purposes will void the product warranty. Any modifications to this product without prior express approval by Banner Engineering Corp will void the product warranties. All specifications published in this document are subject to change; Banner reserves the right to modify product specifications or update documentation at any time. Specifications and product information in English supersede that which is provided in any other language. For the most recent version of any documentation, refer to: *www.bannerengineering.com*.

© Banner Engineering Corp. All rights reserved