U-GAGE® T30 Series with Dual Discrete Outputs

Datasheet

Ultrasonic Sensors with TEACH-Mode Programming

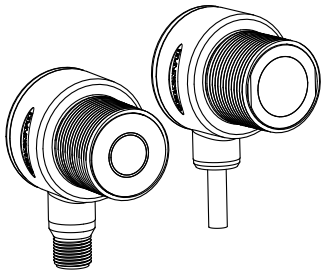

- Fast, easy-to-use TEACH-Mode programming; no potentiometer adjustments
- Choose to set a specific window size and position, or a set point centered within its own 10 mm window, for either or both outputs
- Program both outputs together or independently. The two outputs may be identical, independent, overlapping, or complementary
- Remote TEACH for security and convenience
- Choose models with 150 mm to 1 m range (5.9 in to 39.4 in) or 300 mm to 2 m range (11.8 in to 78.7 in)
- Wide operating range of –20 °C to +70 °C (–4 °F to +158 °F)
- Choose models with either NPN or PNP dual discrete outputs
- LED indicators for Power ON/OFF, Signal Strength, and Discrete Outputs Conducting
- Choose models with integral unterminated 2 m (6.5 ft) or 9 m (30 ft) cable, or with M12/ Euro-style quick-disconnect connection
- Compact, self-contained sensor package
- Rugged design for use in demanding sensing environments; rated IEC IP67, NEMA 6P

WARNING:

- **Do not use this device for personnel protection**
- Using this device for personnel protection could result in serious injury or death.
- This device does not include the self-checking redundant circuitry necessary to allow its use in personnel safety applications. A device failure or malfunction can cause either an energized (on) or de-energized (off) output condition.

Models

Models	Range and Frequency	Cable[1]	Supply Voltage	Discrete Output	Response Time
T30UDNA	150 mm to 1 m (5.9 in to 39 in) 228 kHz	2 m (6.5 ft)	12 to 24 V DC	NPN (sinking)	48 ms
T30UDNAQ		5-pin M12/Euro-style QD			
T30UDPA		2 m (6.5 ft)		PNP (sourcing)	
T30UDPAQ		5-pin M12/Euro-style QD			
T30UDPAQ	300 mm to 2 m (11.8 in to 79 in) 128 kHz	2 m (6.5 ft)		NPN (sinking)	96 ms
T30UDNB		5-pin M12/Euro-style QD			
T30UDPB		2 m (6.5 ft)		PNP (sourcing)	
T30UDPBQ		5-pin M12/Euro-style QD			

Overview

The U-GAGE is an easy-to-use ultrasonic sensor, ideal for demanding environments. Simple push-button programming provides flexibility for a variety of applications. Excellent for gauging applications such as sensing of liquid levels in a tank or for sensing most clear materials.

Each sensor includes two discrete outputs, which may be programmed independently with different window limits or together with identical limits. Each output has the option of being set with a sensing distance set point centered within a 10 mm window.

[1] To order the 9 m (30 ft) cable models, add **W/30** to the model number of any cabled sensor (for example, **T30UDNA W/30**). A model with a QD connector requires an optional mating cable; see *Cordsets* (p. 7).

Configuration Instructions

Sensor Programming

Window limits may be taught to the sensor in several ways. The following methods describe the programming procedures using the push buttons on the back of the sensor; remote programming (remote TEACH) procedures are described in *Remote Programming* (p. 3).

Note: When the sensor changes state between Program and Run modes, all of the LED indicators turn OFF momentarily, before the appropriate LEDs turn ON as described below. The sensing window limits expand temporarily to full scale (max range) during Program mode.

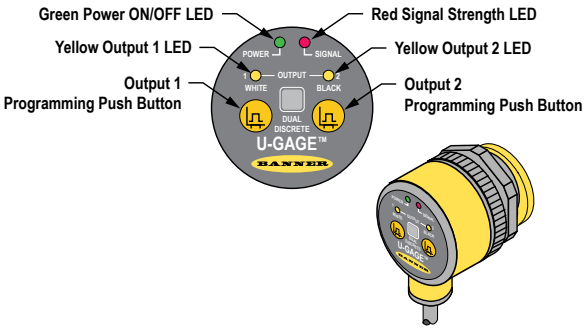

Figure 1. U-GAGE T30 Series sensor programming push buttons and indicators

Program the outputs independently to define separate sensing windows (both their size and placement) or program the outputs simultaneously for complementary or fixed field operation.

Sensing windows may be as large as 0.85 m for 1 m range models, and as large as 1.7 m for 2 m range models. Use the procedures as described, or combine them for specialized applications.

Note: Output 1 = White wire, **Output 2** = Black wire

General Notes on Programming:

1. The sensor returns to Run mode if the first TEACH condition is not registered within 120 seconds.
2. After the first limit is taught, the sensor remains in Program mode until the TEACH sequence is finished.
3. Press and hold the programming push button > 2 seconds (before teaching the second limit) to exit Program mode without saving any changes. The sensor will revert to the last saved program.
4. The sensor allows for some forgiveness in the teaching of a set point. If both near and far limits are not exactly the same (but are closer than the minimum 10 mm required to define a window), the sensor will set a 10 mm window with the center at the “average” of the two limits.

To Program Separate Sensing Window Limits

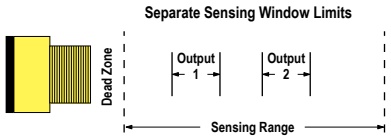

Figure 2. Programming separate sensing window limits

Each output conducts when the target is inside that output’s window limits. The two sets of window limits may overlap or be completely independent.

1. Press and hold the push button for the selected output until the green Power LED turns OFF and the yellow LED for the programmed output turns ON.
2. Position the target at the first limit and click the push button. The yellow Output LED flashes.
3. Position the target at the second limit and click the push button. The green Power LED turns ON. The sensor is in Run mode.
4. Repeat the procedure for the second output, if desired.

To Program Separate Sensing Set Point Limits

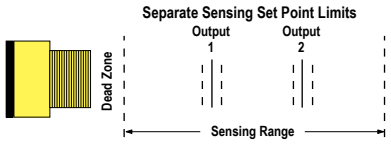

Figure 3. Programming separate sensing set point limits

Each output conducts when the target is inside that output's 10 mm limits (centered on the taught set point, or the average of the two limits). The window limits for the two outputs may overlap or be completely independent.

1. Press and hold the push button for the selected output until the green Power LED turns OFF and the yellow LED for the programmed output turns ON.
2. Position the target at the set point and click the push button. The yellow Output LED flashes.
3. While the target remains at the first limit (or within 10 mm), click the push button once more. The green Power LED turns ON. The sensor is in Run mode.
4. Repeat the procedure for the second output, if desired.

To Program A Single Pair of Sensing Window Limits, with Complementary Outputs

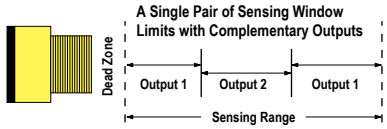

Figure 4. Programming a single pair of sensing window limits, complementary outputs

Output 2 conducts when inside the programmed window limits; Output 1 conducts for all other conditions.

1. Press and hold both push buttons (or press and hold one and then the other) until the green Power LED turns OFF and both yellow Output LEDs turn ON.
2. Position the target at the first limit and click a push button. The yellow Output LED flashes.
3. Position the target at the second limit and click a push button. The green Power LED turns ON. The sensor is in Run mode.

Note: The window limits must be ≥ 10 mm or the sensor will default to fixed-field style.

To Program A Single Sensing Set Point, with Complementary Outputs (Fixed-Field Style)

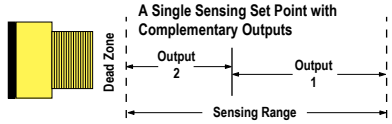

Figure 5. Programming separate sensing set point limits, complementary outputs

Output 2 conducts when inside the programmed set point; Output 1 conducts outside (away) from this point.

1. Press and hold both push buttons (or press and hold one and then the other) until the green Power LED turns OFF and both yellow Output LEDs turn ON.
2. Position the target at the first limit and click a push button. The yellow Output LED flashes.
3. While the target remains at the first limit (or within 10 mm), click the push button once more. The green Power LED turns ON. The sensor is in Run mode.

Remote Programming

Use the Remote Programming function to program the sensor remotely or to disable the keypad, Disabling the keypad prevents anyone from adjusting any of the programming settings directly from the sensor. Connect the gray wire of the sensor to +12 to 24V dc, with a remote programming switch connected between them.

Note: The impedance of the remote teach input is 55 kΩ.

Follow the sequence of input pulses to program the sensor. The duration of each pulse (corresponding to a push button "click"), and the period between multiple pulses, is defined as: 0.04 seconds < T < 0.8 seconds.

- **1 pulse:** Programs first Output 2 limit. Wait > 0.8 seconds. Next pulse programs second Output 2 limit.
- **2 pulses:** Programs first Output 1 limit. Wait > 0.8 seconds. Next pulse programs second Output 1 limit.
- **3 pulses:** Programs both outputs together (complementary or fixed-field mode). First 3-pulse programs the first limit; wait > 0.8 sec. Next pulse programs second limit and determines output configuration.
- **4 pulses:** Disables (locks out) or enables the keypad for security.

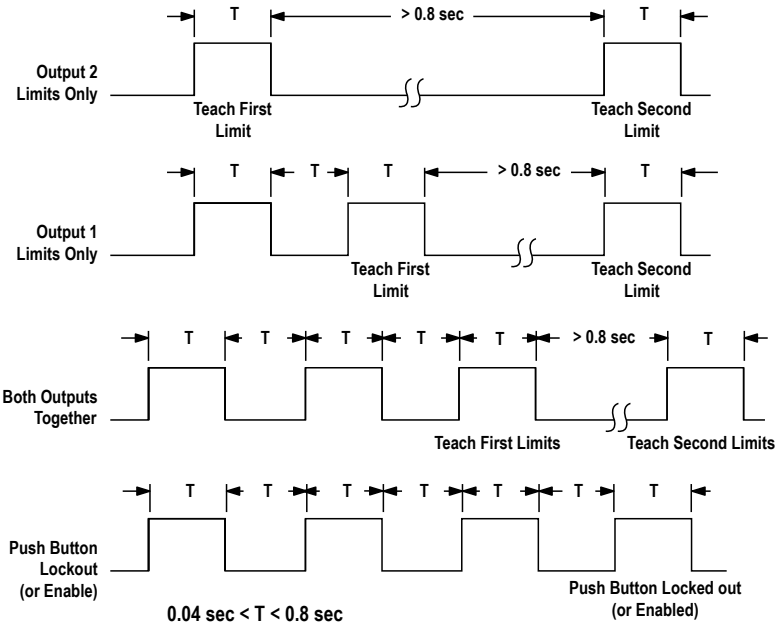

Figure 6. Timing programs for remote TEACH programming

Note: Hold the Remote line high > 2 seconds (before teaching the second limit) to exit Program mode without saving any changes. The sensor will revert to the last saved program.

Wiring Diagrams

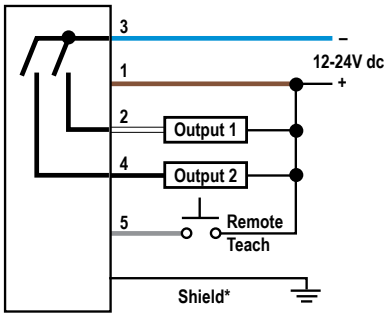

Figure 7. Cabled NPN

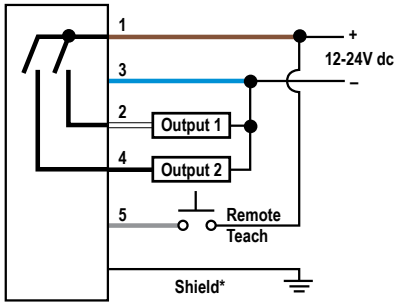

Figure 8. Cabled PNP

5-pin M12/Euro-style male connector models

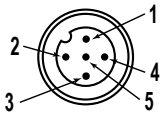

Key

1 = Brown
2 = White
3 = Blue
4 = Black
5 = Gray

It is recommended that the shield wire is connected to earth ground or dc common.

Run Mode

Note: All LED indicators momentarily turn OFF when the sensor changes state between Program and Run modes.

Signal LED

The red Signal LED indicates the strength and condition of the sensor's incoming signal.

Signal LED Status	Indicates
OFF	No signal is received, or the target is beyond the range limitations of the sensor (with some tolerance beyond the recommended minimum and maximum sensing distance)
Flashing	Relative received signal strength; the faster the LED flashes, the stronger the signal

Output LEDs

Each amber Output LED lights when a target is sensed within the programmed window limits.

Power ON/OFF LED

The green Power ON/OFF LED indicates the operating status of the sensor.

Power ON/OFF LED	Indicates
OFF	Power is OFF (or in Program mode, if other LEDs are ON)
ON Solid	Sensor is operating normally (power is ON, Run mode)
Flashing	Discrete output is overloaded (Run mode)

Self-Diagnostic Error Mode

In the unlikely event of a microprocessor memory error, all of the LEDs will flash in sequence. If this occurs, the setup parameters have been lost and the sensor may be corrupt. Contact Banner Engineering for further information.

Specifications

Proximity Mode Range
"A" suffix models: 150 mm (5.9 in) min. near limit; 1 m (39 in) max. far limit
"B" suffix models: 300 mm (11.8 in) min. near limit; 2 m (79 in) max. far limit

Supply Voltage
12 to 24 V dc (10% max. ripple) at 90 mA, exclusive of load

Supply Protection Circuitry
Protected against reverse polarity and transient voltages

Output Configurations
SPST solid-state switch; choose NPN (current sinking) or PNP (current sourcing) models

Output Ratings
Dual Discrete Outputs: 100 mA maximum, total – both outputs
OFF-state leakage current: less than 10 microamps
ON-state saturation voltage: less than 1 V at 10 mA and less than 1.5 V at 100 mA

Output Protection
Protected against continuous overload and short-circuit; transient over-voltage; no false pulse on power-up

Output Response Time
"A" suffix models: 48 milliseconds
"B" suffix models: 96 milliseconds

Sensing Performance
Sensing repeatability: ±0.25% of distance
Minimum window size: 10 mm (0.4 in)
Hysteresis of discrete output: 2.5 mm (0.10 in)

Adjustments
Sensing window limits: TEACH-mode programming of near and far window limits may be set using membrane push buttons on sensor or remotely via TEACH input. Window limits may be programmed separately, or together

Construction
Molded reinforced thermoplastic polyester housing

Environmental Rating
Leakproof design is rated IEC IP67, NEMA 6P

Connections
2 m (6.5 ft) or 9 m (30 ft) 5-conductor PVC-covered attached cable, or 5-pin Euro-style quick-disconnect fitting

Operating Conditions
Temperature: –20 °C to +70 °C (–4 °F to +158 °F)
Humidity: 100% maximum relative humidity

Vibration and Mechanical Shock
All models meet Mil. Std. 202F requirements. Method 201A (Vibration: 10 to 60 Hz max., double amplitude 0.06 in, maximum acceleration 10G). Also meets IEC 947-5-2 requirements: 30G, 11 ms duration, half sine wave

Certifications
CE

Application Notes
Objects passing inside the specified near limit will produce a false response

Indicators

Status LEDs	Run Mode	Program mode
Green	ON: Power ON, Run mode	OFF: Program Mode
	Flashing: Output is overloaded	
Red	Flashing: Relative received signal strength	Flashing: Relative received signal strength
Amber (2)	ON: Output energized (conducting)	ON: Ready for first window limit
		Flashing: Ready for second limit
		OFF: Not teaching this output

Performance Curves

Effective Beam with Plate Target (Typical)

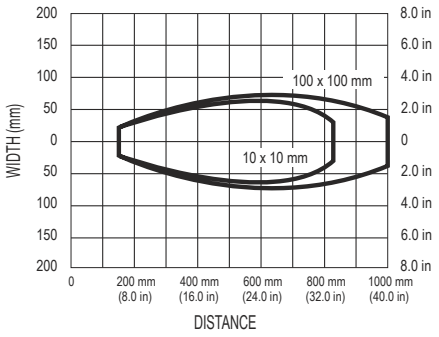

Figure 9. A Models

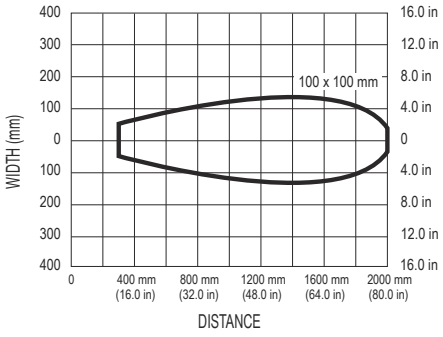

Figure 10. B Models

Effective Beam with Rod Target (Typical)

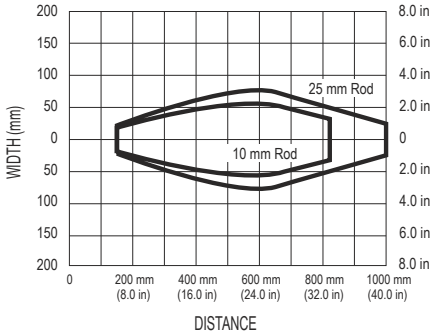

Figure 11. A Models

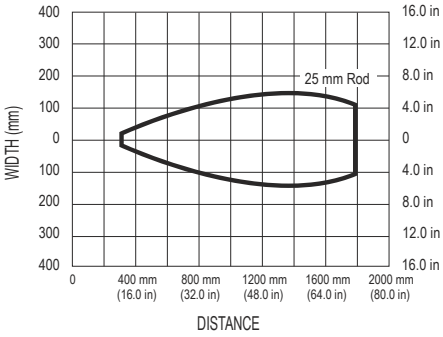

Figure 12. B Models

Dimensions

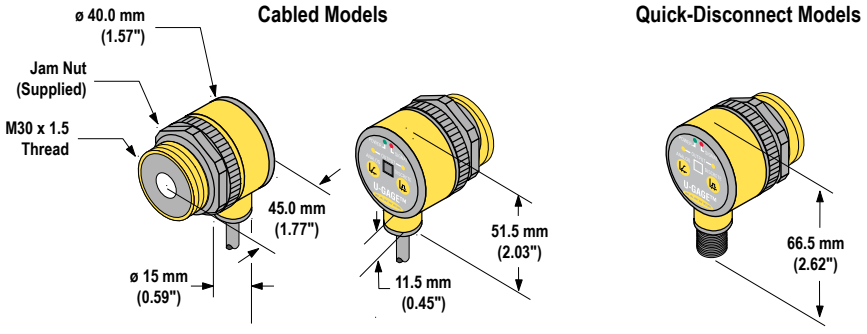

Accessories

Cordsets

5-Pin Threaded M12/Euro-Style Cordsets with Shield—Single Ended				
Model	**Length**	**Style**	**Dimensions**	**Pinout (Female)**
MQDEC2-506	1.83 m (6 ft)	Straight	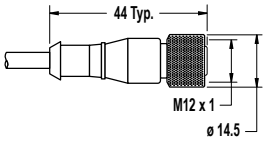	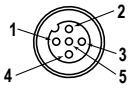 1 = Brown 2 = White 3 = Blue 4 = Black 5 = Gray
MQDEC2-515	4.57 m (15 ft)			
MQDEC2-530	9.14 m (30 ft)			
MQDEC2-550	15.2 m (50 ft)			
MQDEC2-506RA	1.83 m (6 ft)	Right-Angle	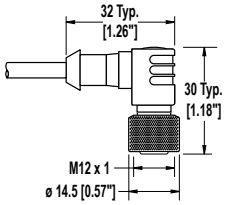	
MQDEC2-515RA	4.57 m (15 ft)			
MQDEC2-530RA	9.14 m (30 ft)			
MQDEC2-550RA	15.2 m (50 ft)			

Brackets

All measurements are in mm.

SMB30A

- Right-angle bracket with curved slot for versatile orientation
- Clearance for M6 (¼ in) hardware
- Mounting hole for 30 mm sensor
- 12-ga. stainless steel

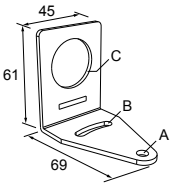

Hole center spacing: A to B=40
Hole size: A=ø 6.3, B= 27.1 x 6.3, C=ø 30.5

SMB1815SF

- Swivel with set screws for mounting sensors by the cable hub
- Black reinforced thermoplastic polyester
- Stainless steel swivel locking hardware and hex wrench included

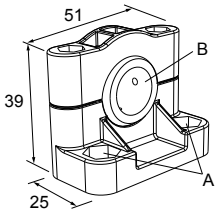

Hole center spacing: A = 36.0
Hole size: A = ø 5.0, B = ø 15.0

SMB30FA

- Swivel bracket with tilt and pan movement for precise adjustment
- Mounting hole for 30 mm sensor
- 12-ga. 304 stainless steel
- Easy sensor mounting to extrude rail T-slot
- Metric and inch size bolt available

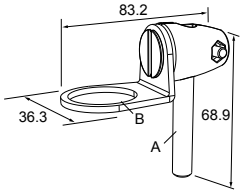

Bolt thread: SMB30FA, A= 3/8 - 16 x 2 in; SMB30FAM10, A= M10 - 1.5 x 50
Hole size: B= ø 30.1

SMB30SC

- Swivel bracket with 30 mm mounting hole for sensor
- Black reinforced thermoplastic polyester
- Stainless steel mounting and swivel locking hardware included

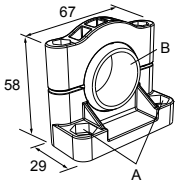

Hole center spacing: A=ø 50.8
Hole size: A=ø 7.0, B=ø 30.0

Banner Engineering Corp. Limited Warranty

Banner Engineering Corp. warrants its products to be free from defects in material and workmanship for one year following the date of shipment. Banner Engineering Corp. will repair or replace, free of charge, any product of its manufacture which, at the time it is returned to the factory, is found to have been defective during the warranty period. This warranty does not cover damage or liability for misuse, abuse, or the improper application or installation of the Banner product.

THIS LIMITED WARRANTY IS EXCLUSIVE AND IN LIEU OF ALL OTHER WARRANTIES WHETHER EXPRESS OR IMPLIED (INCLUDING, WITHOUT LIMITATION, ANY WARRANTY OF MERCHANTABILITY OR FITNESS FOR A PARTICULAR PURPOSE), AND WHETHER ARISING UNDER COURSE OF PERFORMANCE, COURSE OF DEALING OR TRADE USAGE.

This Warranty is exclusive and limited to repair or, at the discretion of Banner Engineering Corp., replacement. **IN NO EVENT SHALL BANNER ENGINEERING CORP. BE LIABLE TO BUYER OR ANY OTHER PERSON OR ENTITY FOR ANY EXTRA COSTS, EXPENSES, LOSSES, LOSS OF PROFITS, OR ANY INCIDENTAL, CONSEQUENTIAL OR SPECIAL DAMAGES RESULTING FROM ANY PRODUCT DEFECT OR FROM THE USE OR INABILITY TO USE THE PRODUCT, WHETHER ARISING IN CONTRACT OR WARRANTY, STATUTE, TORT, STRICT LIABILITY, NEGLIGENCE, OR OTHERWISE.**

Banner Engineering Corp. reserves the right to change, modify or improve the design of the product without assuming any obligations or liabilities relating to any product previously manufactured by Banner Engineering Corp. Any misuse, abuse, or improper application or installation of this product or use of the product for personal protection applications when the product is identified as not intended for such purposes will void the product warranty. Any modifications to this product without prior express approval by Banner Engineering Corp will void the product warranties. All specifications published in this document are subject to change; Banner reserves the right to modify product specifications or update documentation at any time. Specifications and product information in English supersede that which is provided in any other language. For the most recent version of any documentation, refer to: *www.bannerengineering.com*.

For patent information, see *www.bannerengineering.com/patents*.

© Banner Engineering Corp. All rights reserved