DATE	REV	ECN	APP'D. BY
8-11-17	A2	11061	TRM
8-16-17	A3	11066	TRM

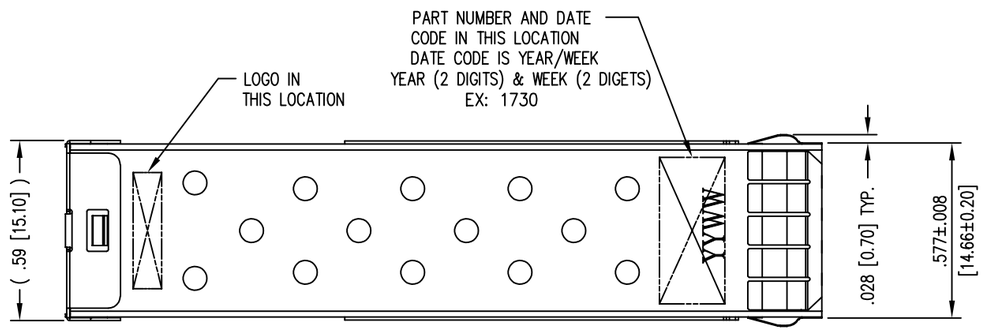

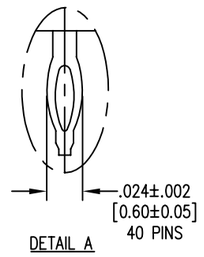

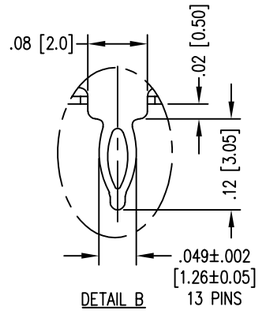

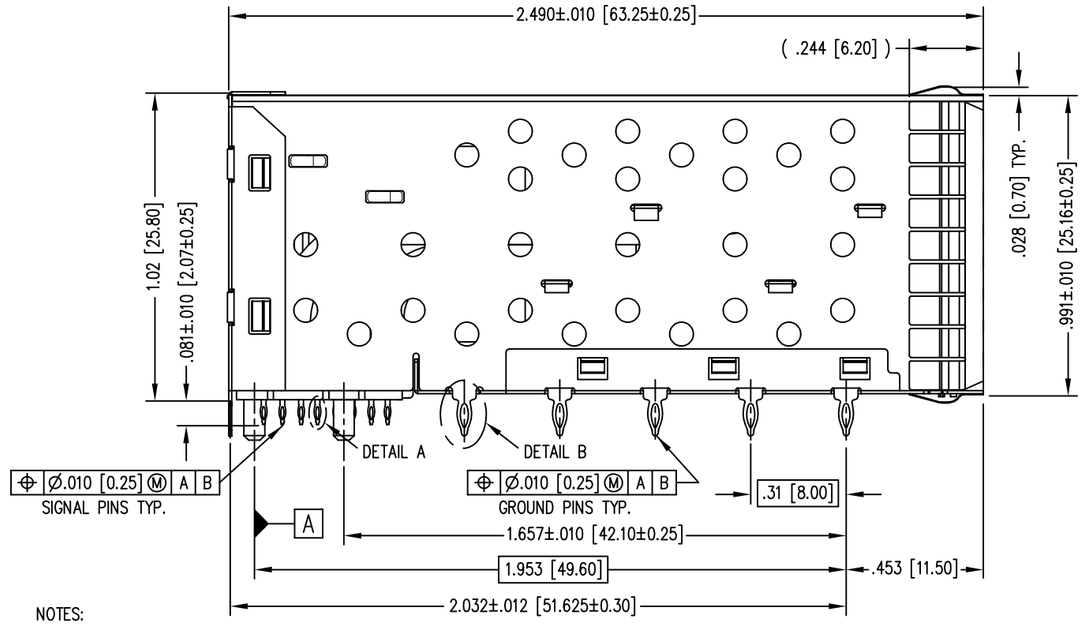

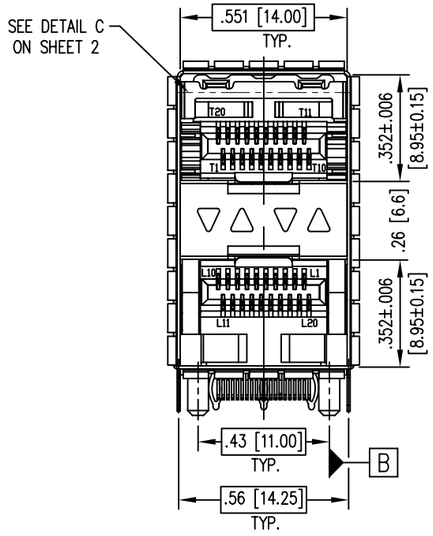

NOTES:

1. MATERIALS:
   CONTACT: PHOSPHOR BRONZE
   CONNECTOR HOUSING: LCP UL 94V-0 COLOR: BLACK
   MOLDED INSERT: HIGH TEMP PLASTIC UL 94V-0 COLOR: BLACK
   CAGE: COPPER ALLOY
   LIGHT PIPES: POLYCARBONATE UL 94V-0 COLOR: CLEAR
   LIGHT PIPE HOUSING: PBT UL 94V-0 COLOR: BLACK
   EMI SPRINGS: COPPER ALLOY
2. PLATING:
   PCB PINS: 0.0001 [2.54um] MINIMUM MATTE TIN
   OVER 0.00005 [1.27um] MINIMUM NICKEL
   CAGE: NICKEL
3. TEMPERATURE:
   OPERATIONAL: -40°C~+85°C
   STORAGE: -55°C~+105°C
4. FOR PRODUCT SPECIFICATIONS SEE PR043-01.
5. MATES WITH SFP MSA COMPLIANT TRANSCEIVERS.

RoHS

30 MICRO-INCHES [0.76um]	SS-79100-010
CONTACT PLATING IN MATING AREA	PART NUMBER

THIRD ANGLE PROJECTION

DRAWING IS SUBJECT TO CHANGE WITHOUT NOTICE

UNLESS OTHERWISE SPECIFIED DIMENSIONS INCHES [METRIC]
TOLERANCES ARE:
ANGLES ± 2°
1 PLC. DEC. ±.010" [±0.25]
2 PLC. DEC. ±.005" [±0.13]
3 PLC. DEC. ±.004" [±0.10]
DO NOT SCALE DRAWING

SHEET NO. 1 OF 4

stewart CONNECTOR
a bel group
11118 Susquehanna Trail South
Glen Rock, PA 17327-9199
(717) 235-7512
http://www.stewartconnector.com

TITLE: SFP+ 2X1 CAGE W/LIGHT PIPES, PRESS FIT

THIS DRAWING AND THE SUBJECT MATTER SHOWN THEREON ARE CONFIDENTIAL AND THE PROPRIETARY PROPERTY OF STEWART CONNECTOR AND SHALL NOT BE REPRODUCED, COPIED, OR USED IN ANY MANNER WITHOUT PRIOR WRITTEN CONSENT OF STEWART CONNECTOR. ONE OR MORE U.S. PATENTS MAY APPLY TO THIS PRODUCT. FOR DETAILS, PLEASE VISIT: HTTP://BELFUSE.COM/STEWART/STEWART_PATENTS/

DRN BY: TRM	DATE 6-15-17
APPD BY: DHG	DATE 6-30-17
DWG NO. CT790010	REV. A3

AutoCAD

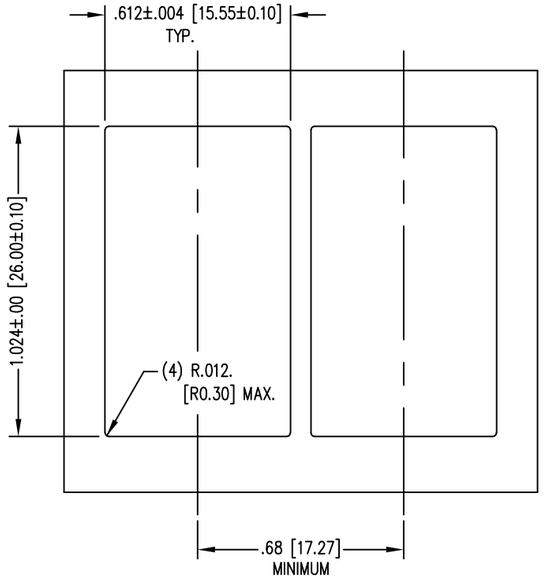

BEZEL CUT-OUT CENTER SPACING DETAIL
BEZEL THICKNESS: .03 [0.8] – .10 [2.6]

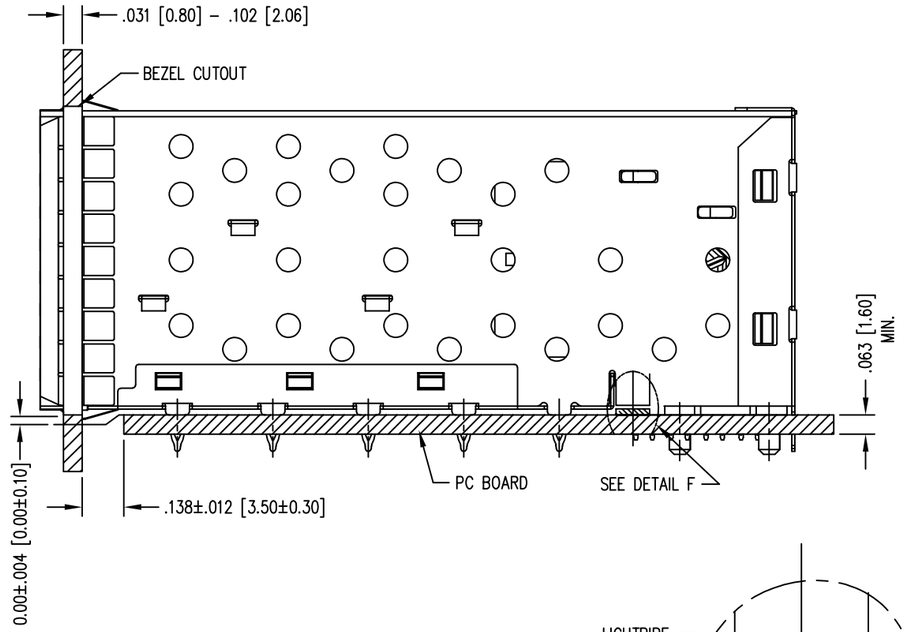

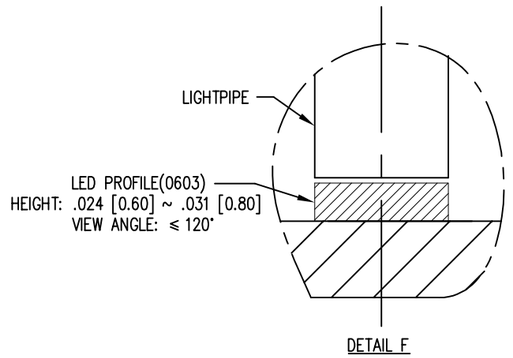

DETAIL F

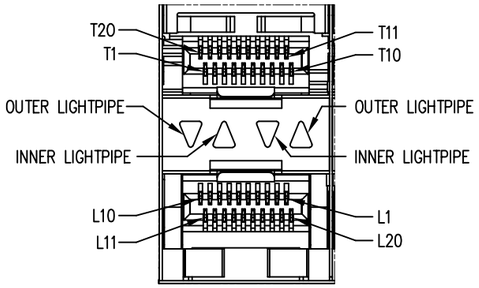

DETAIL C

RoHS

THIRD ANGLE PROJECTION

DRAWING IS SUBJECT TO CHANGE WITHOUT NOTICE

UNLESS OTHERWISE SPECIFIED DIMENSIONS INCHES [METRIC]
TOLERANCES ARE:
ANGLES ± 2°
1 PLC. DEC. ±.010" [±0.25]
2 PLC. DEC. ±.005" [±0.13]
3 PLC. DEC. ±.004" [±0.10]
DO NOT SCALE DRAWING

SHEET NO. 2 OF 4

stewart CONNECTOR
a bel group
11118 Susquehanna Trail South
Glen Rock, PA 17327-9199
(717) 235-7512
http://www.stewartconnector.com

TITLE: SFP+ 2X1 CAGE W/LIGHT PIPES, PRESS FIT

THIS DRAWING AND THE SUBJECT MATTER SHOWN THEREON ARE CONFIDENTIAL AND THE PROPRIETARY PROPERTY OF STEWART CONNECTOR AND SHALL NOT BE REPRODUCED, COPIED, OR USED IN ANY MANNER WITHOUT PRIOR WRITTEN CONSENT OF STEWART CONNECTOR. ONE OR MORE U.S. PATENTS MAY APPLY TO THIS PRODUCT. FOR DETAILS, PLEASE VISIT: HTTP://BELFUSE.COM/STEWART/STEWART_PATENTS/

DRN BY:	TRM	DATE	6-15-17
APPD BY:	DHG	DATE	6-30-17
DWG NO.	CT790010	REV.	A3

AutoCAD

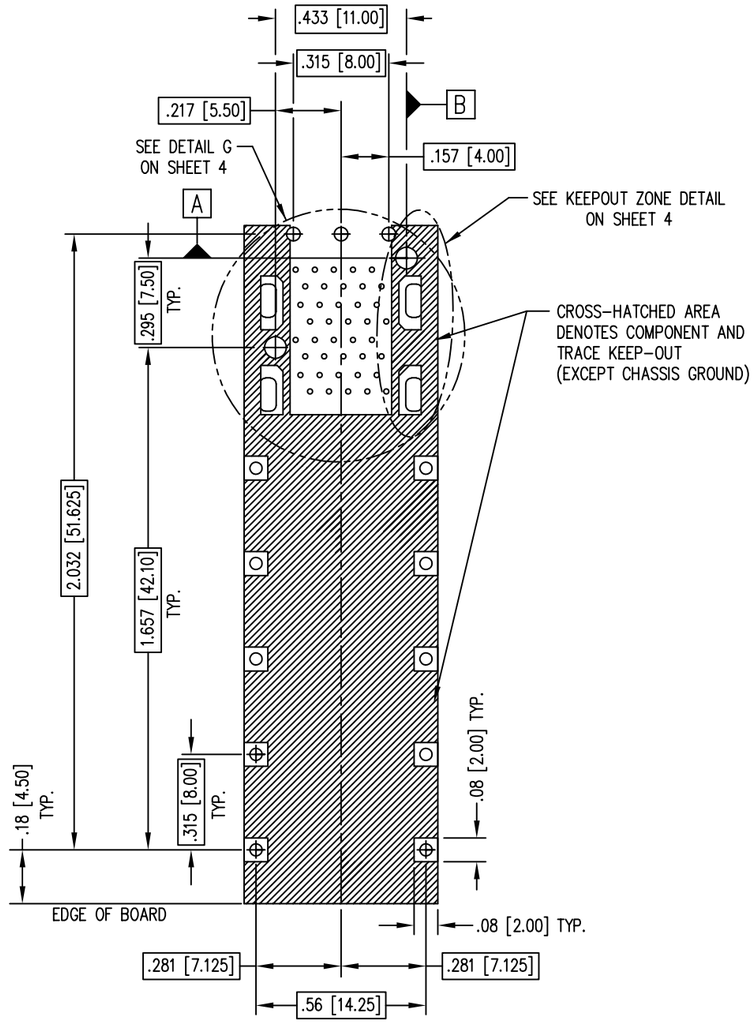

RECOMMENDED PCB LAYOUT – COMPONENT SIDE
RECOMMENDED PCB THICKNESS – .104 [2.63]

THE ENTIRE AREA OF THE CONNECTOR FOOTPRINT
TO BE CONSIDERED THE KEEP OUT AREA FOR COMPONENTS
(OTHER THAN LIGHTPIPE LEDS)
THIS AREA IS INDICATED BY THE DASHED LINE

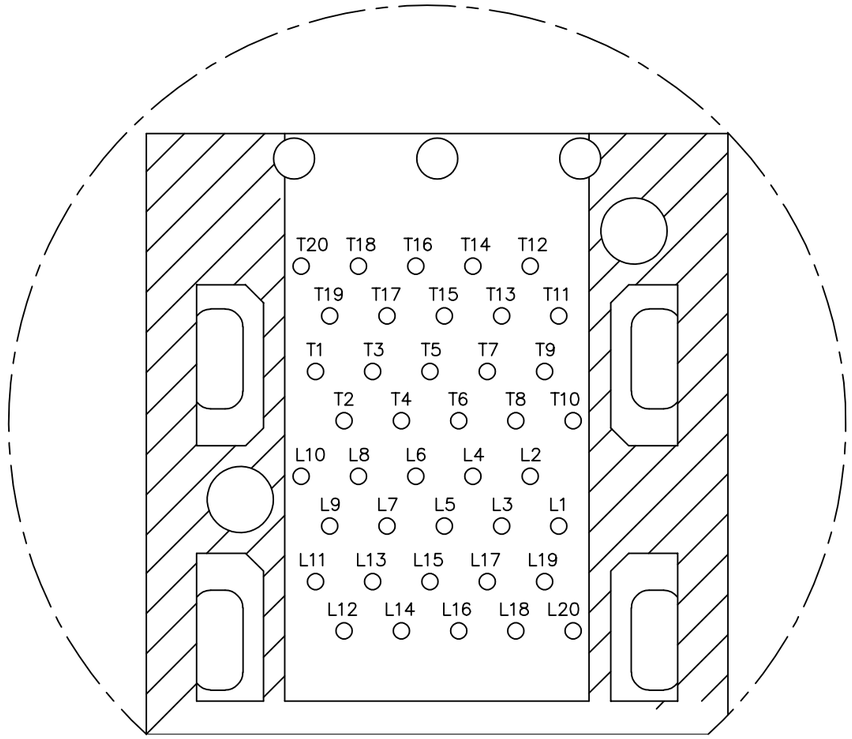

CONNECTOR PIN-OUT
COMPONENT SIDE OF BOARD

RoHS

THIRD ANGLE PROJECTION

DRAWING IS SUBJECT TO CHANGE WITHOUT NOTICE

UNLESS OTHERWISE SPECIFIED
DIMENSIONS INCHES [METRIC]
TOLERANCES ARE:
ANGLES ± 2°
1 PLC. DEC. ±.010" [±0.25]
2 PLC. DEC. ±.005" [±0.13]
3 PLC. DEC. ±.004" [±0.10]
DO NOT SCALE DRAWING

SHEET NO. 3 OF 4

stewart CONNECTOR
a bel group
11118 Susquehanna Trail South
Glen Rock, PA 17327-9199
(717) 235-7512
http://www.stewartconnector.com

TITLE: SFP+ 2X1 CAGE W/LIGHT PIPES, PRESS FIT

THIS DRAWING AND THE SUBJECT MATTER SHOWN THEREON ARE CONFIDENTIAL AND THE PROPRIETARY PROPERTY OF STEWART CONNECTOR AND SHALL NOT BE REPRODUCED, COPIED, OR USED IN ANY MANNER WITHOUT PRIOR WRITTEN CONSENT OF STEWART CONNECTOR. ONE OR MORE U.S. PATENTS MAY APPLY TO THIS PRODUCT. FOR DETAILS, PLEASE VISIT: HTTP://BELFUSE.COM/STEWART/STEWART_PATENTS/

DRN BY:	TRM	DATE	6-15-17
APPD BY:	DHG	DATE	6-30-17
DWG NO.	CT790010	REV.	A3

AutoCAD

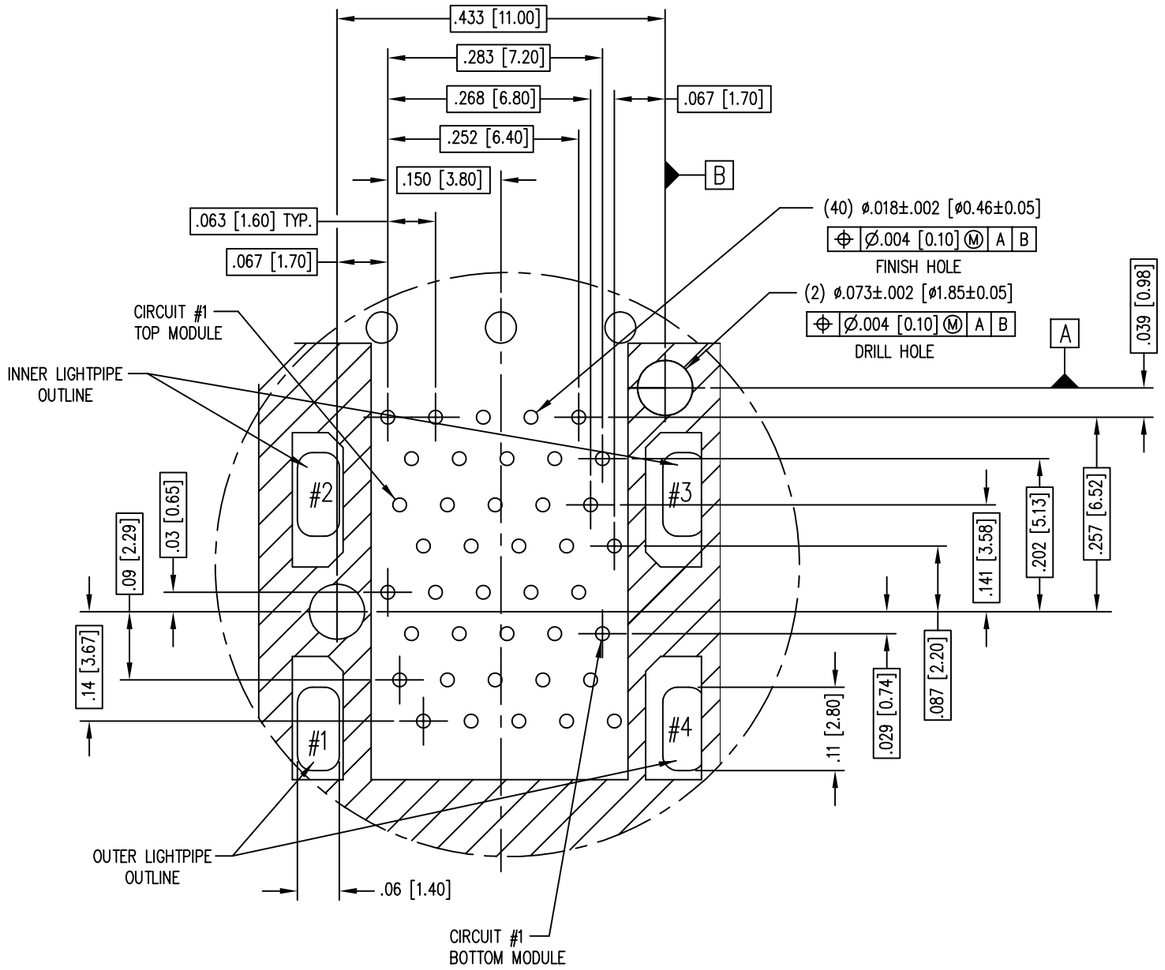

DETAIL G

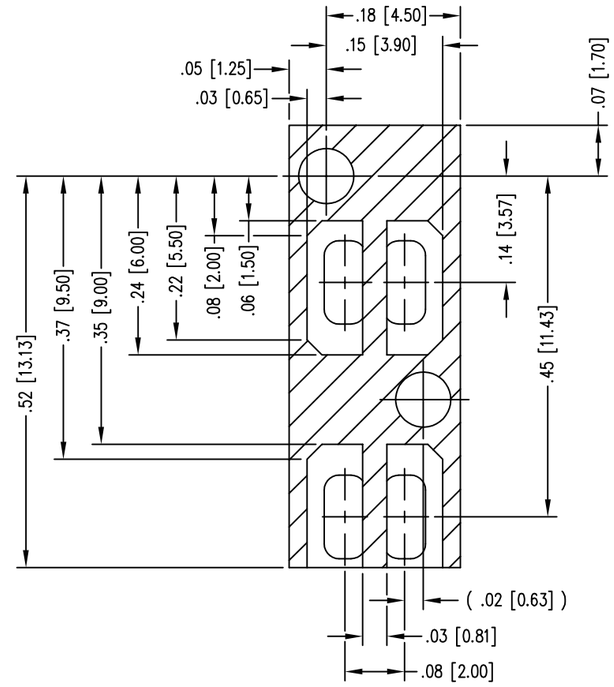

KEEPOUT ZONE DETAIL

THIRD ANGLE PROJECTION

DRAWING IS SUBJECT TO CHANGE WITHOUT NOTICE

UNLESS OTHERWISE SPECIFIED DIMENSIONS INCHES [METRIC]
TOLERANCES ARE:
ANGLES ± 2°
1 PLC. DEC. ±.010" [±0.25]
2 PLC. DEC. ±.005" [±0.13]
3 PLC. DEC. ±.004" [±0.10]
DO NOT SCALE DRAWING

SHEET NO. 4 OF 4

RoHS

stewart CONNECTOR a bel group
11118 Susquehanna Trail South
Glen Rock, PA 17327-9199
(717) 235-7512
http://www.stewartconnector.com

TITLE: SFP+ 2X1 CAGE W/LIGHT PIPES, PRESS FIT

THIS DRAWING AND THE SUBJECT MATTER SHOWN THEREON ARE CONFIDENTIAL AND THE PROPRIETARY PROPERTY OF STEWART CONNECTOR AND SHALL NOT BE REPRODUCED, COPIED, OR USED IN ANY MANNER WITHOUT PRIOR WRITTEN CONSENT OF STEWART CONNECTOR. ONE OR MORE U.S. PATENTS MAY APPLY TO THIS PRODUCT. FOR DETAILS, PLEASE VISIT: HTTP://BELFUSE.COM/STEWART/STEWART_PATENTS/

DRN BY:	TRM	DATE	6-15-17
APPD BY:	DHG	DATE	6-30-17
DWG NO.	CT790010	REV.	A3

AutoCAD