SPECIFICATION

BDT3063H10 LF

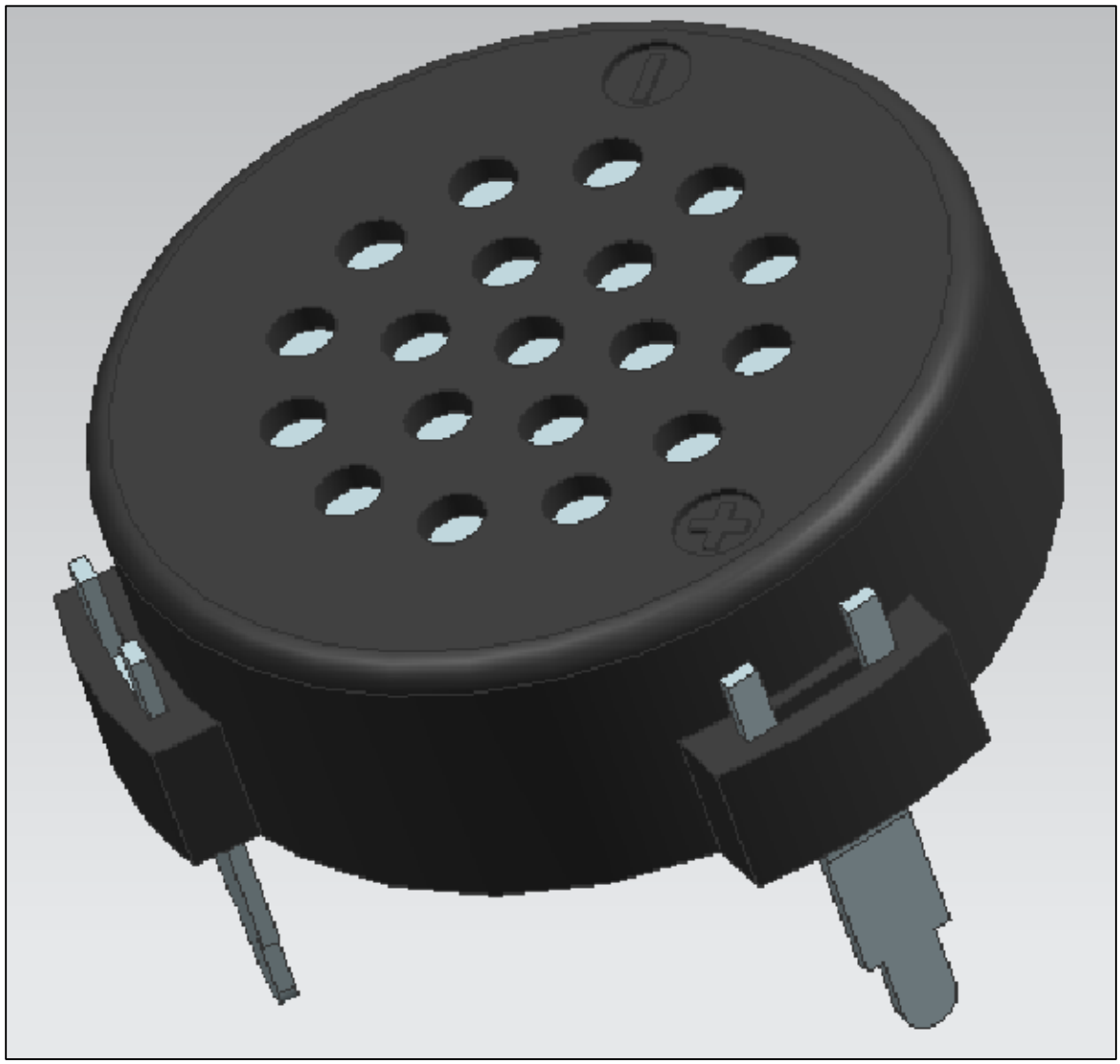

文件号：BS/QDTE045B

SPECIFICATION
FOR AUTOMOTIVE SPEAKER

TOTAL PAGE	11	www.bestargroups.com	RoHS

Customer		Model Name	BDT3063H10 LF
Customer P/N		Product No.	139786
Date	28 Dec. 2015	Issue No.	BS/TES01.1482C
Page	01 of 11	Issue Date	2015/12/28

Approval:

1.Characteristics
2.Notice
3.Dimension
4.Bill of Material
5.Reliability Test
6.Packing
7.History change record

Drawn by	Checked by	Approved by	Customer approved
王昌安	莫丽丽	张秀琴	

BESTAR HOLDING CO.,LTD

No.199 HuangHe West Road,New district,ChangZhou,JiangSu Province,P.R.China

Tel: +86 519 88222567 ***Fax:*** +86 519 88222551

E-mail:wu@be-star.com ***http://www.bestargroups.com***

BDT3063H10 LF

1. Characteristics

1.1 Electrical and Mechanical Characteristics

No.	Item	Specifications
1.	Impedance *(2kHz)	63ohm± 10%
2 .	Resistance （20℃）	63ohm±10%
3.	Rated operational current (At 2kHz)	<100mA
4.	Rated Input Power	12V0-p
5.	Max. Input Power	16V0-p
6.	Operating Voltage	
	Impulse voltage,square wave,duty cycle 50%,symmetric	12V0-p
7.	Output SPL Values are shown in table1	
	The sound pressure level is measured according to the test assembly shown in picture1.	
8.	Frequency range	500Hz to 4000Hz
9.	Operating Temperature	-40...+105°C
10.	Storage Temperature	-40...+105°C
11.	Weight	10.5±0.5g
12.	Voice coil	⌀0.045 Cu (self-bonding hot air)
13.	Break down voltage between pin and housing	> 5kV

picture 1

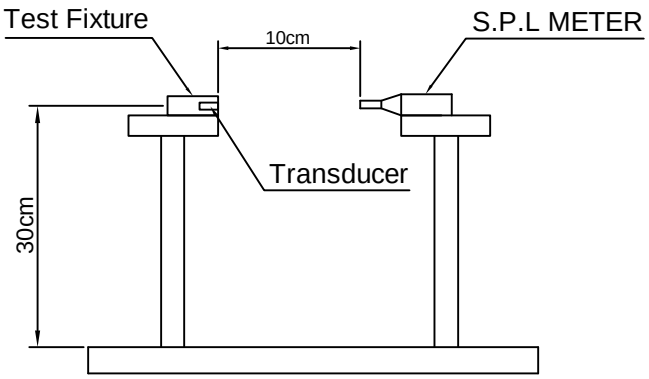

This print and information there in are proprietary to BeStar Holding Co., Ltd. and shall not be used in whole or in part without its written content

				Date:	2015/12/28	BDT3063H10 LF
				Drawn by:	王昌安	
C	2015/12/28	王昌安		Checked by:	莫丽丽	Speaker
Rev.	Date	Drawn	Note	Approved by:	张秀琴	
BESTAR HOLDING CO.,LTD www.bestargroups.com wu@be-star.com						DRG NO: BS/TES01.1482C / Page:02 of 11

BDT3063H10 LF

table 1

Frequency /Hz	Min SPL /dBA	Max SPL /dBA
162	82	90
265	83	91
312	85	93
400	85	93
720	85	95
750	86	96
900	85	95
1000	86	96
1600	95	105
1900	93	103
2000	93	103

Drive circuit

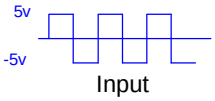

驱动电路

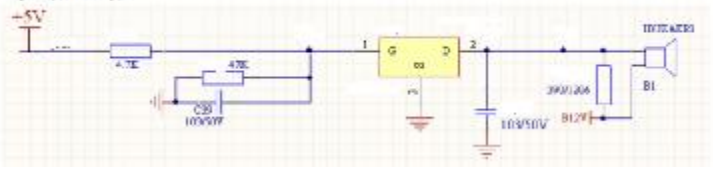

Test conditions

The test assembly is in free field or a test room with min 2m×2m ground and 2m high
Distance between loudspeaker and SPL meter=10cm
DC voltage is 11.3V, trigger signal:10Vp-p,50% duty square wave signal connect customer drive circuit. 162Hz,265Hz,312Hz,400Hz,720Hz,750Hz,1kHz,100% checking before delivery,other frequency points to ensure sound pressure requirements.
The trigger signal comes from a function generator FG100.

1.2 Fundamental (only for reference).Using sine wave 0.15w,0.1m

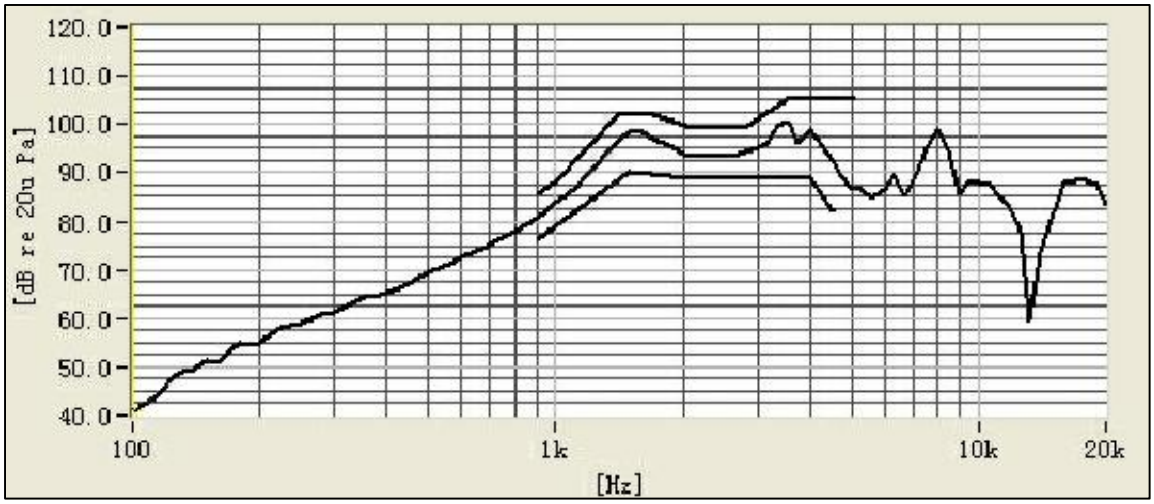

This print and information there in are proprietary to BeStar Holding Co., Ltd. and shall not be used in whole or in part without its written content

				Date:	2015/12/28
				Drawn by:	王昌安
C	2015/12/28	王昌安		Checked by:	莫丽丽
Rev.	Date	Drawn	Note	Approved by:	张秀琴

BESTAR HOLDING CO.,LTD www.bestargroups.com wu@be-star.com

BDT3063H10 LF

Speaker

DRG NO: BS/TES01.1482C

文件号：BS/ODTE045B

BDT3063H10 LF

1.3 THD(only for reference)

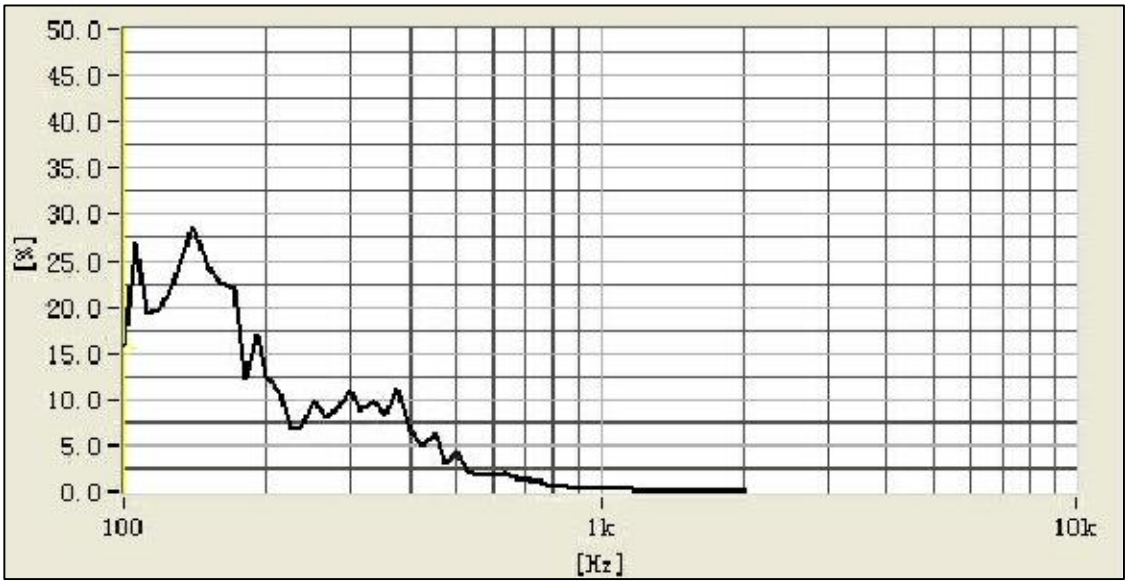

1.4 Impedance(only for reference)

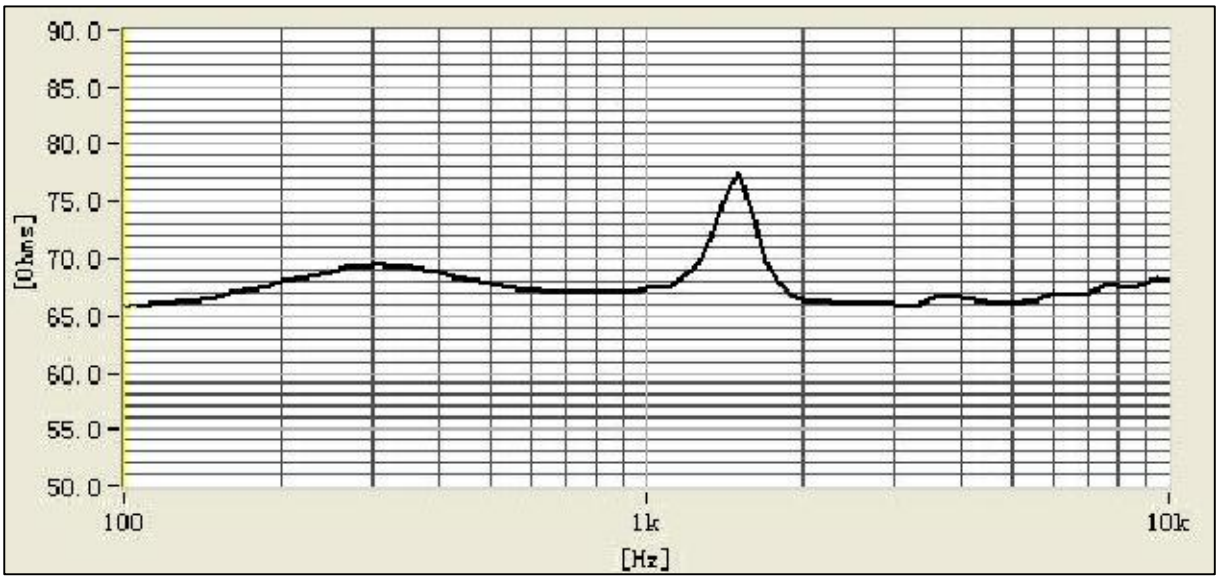

This print and information there in are proprietary to BeStar Holding Co., Ltd. and shall not be used in whole or in part without its written content

				Date:	2015/12/28	BDT3063H10 LF
				Drawn by:	王昌安	
C	2015/12/28	王昌安		Checked by:	莫丽丽	Speaker
Rev.	Date	Drawn	Note	Approved by:	张秀琴	
BESTAR HOLDING CO.,LTD www.bestargroups.com wu@be-star.com						DRG NO: BS/TES01.1482C / Page:04 of 11

BDT3063H10 LF

1.5 Rub&buzz(only for reference)

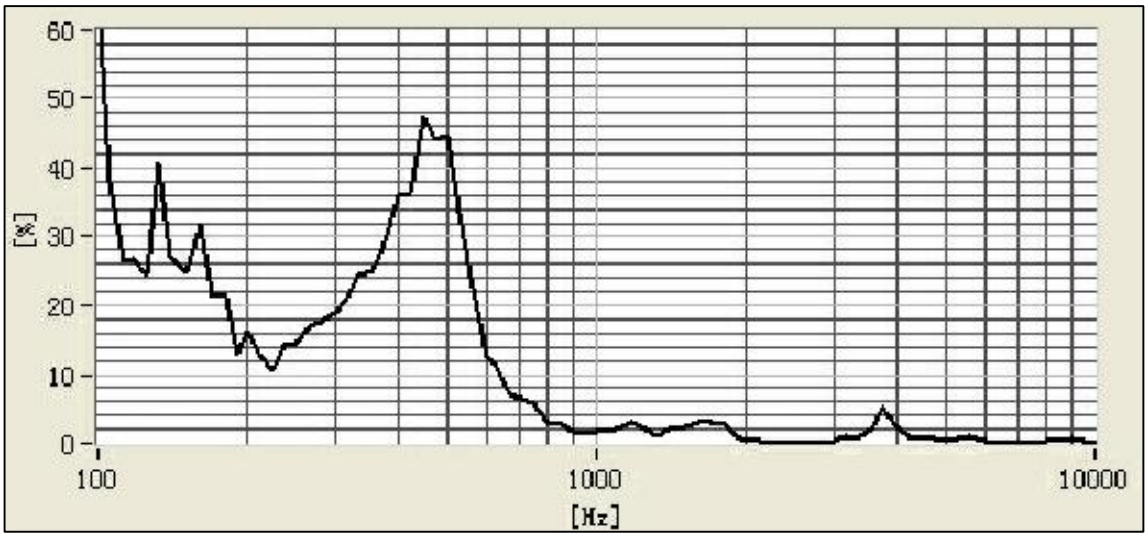

2.Notice

2.1 **Storage Condition**
The products should be stored in the room ,where the temperature/humidity is stable. And avoid such places where there are large temperature changes. Please store the products at the following conditions:
Temperature: -10 to + 40 °C Humidity: 15 to 85% R.H.

2.2 **Expire Date on Storage**
Expire date (Shelf life) of the products is six months after deliveried under the conditions of a sealed and an unopened package. Please use the products within six months after deliveried.
If you store the products for a long time (more than six months), use carefully because the products may be degraded in the solderability and/or rusty.Please confirm solderability and characteristics for the products regularly.

2.3**Notice on Product Storage**
(1) Please do not store the products in a chemical atmosphere (Acids, Alkali, Bases, Organic gas, Sulfides and so on), because the characteristics may be reduced at quality, and/or be degraded in the solderability due to the storage in a chemical atmosphere.
(2) Please use the products immediately after the package is opened, because the characteristics may be reduced at quality, and/or be degraded in the solderability due to storage under the poor condition.

This print and information there in are proprietary to BeStar Holding Co., Ltd. and shall not be used in whole or in part without its written content

				Date:	2015/12/28	BDT3063H10 LF
				Drawn by:	王昌安	
C	2015/12/28	王昌安		Checked by:	莫丽丽	Speaker
Rev.	Date	Drawn	Note	Approved by:	张秀琴	
BESTAR HOLDING CO.,LTD www.bestargroups.com wu@be-star.com						DRG NO: BS/TES01.1482C / Page:05 of 11

BDT3063H10 LF

3. Drawing

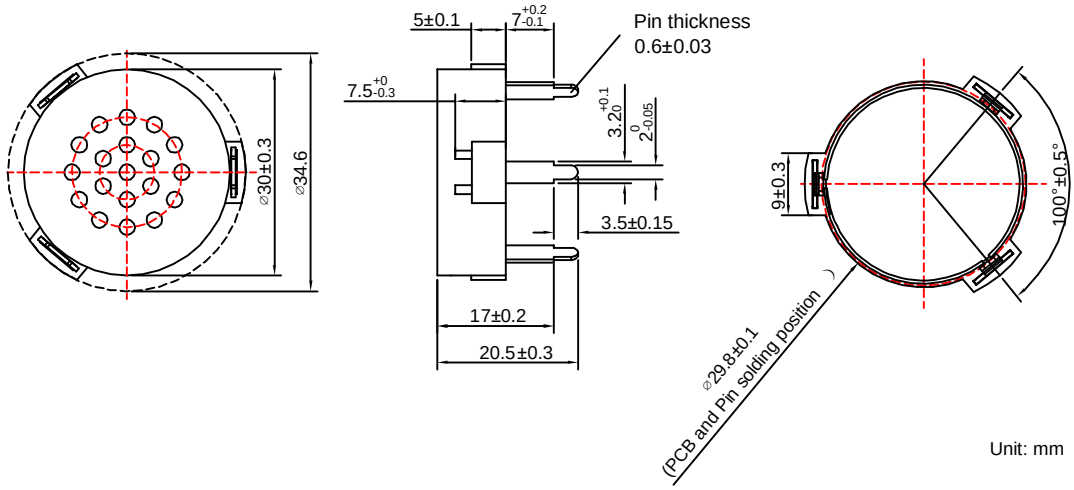

This print and information there in are proprietary to BeStar Holding Co., Ltd. and shall not be used in whole or in part without its written content

Rev.	Date	Drawn	Note
C	2015/12/28	王昌安	

Date:	2015/12/28
Drawn by:	王昌安
Checked by:	莫丽丽
Approved by:	张秀琴

BESTAR HOLDING CO.,LTD www.bestargroups.com wu@be-star.com

BDT3063H10 LF

Speaker

DRG NO: BS/TES01.1482C

文件号：BS/ODTE045B

BDT3063H10 LF

4.Bill of Material

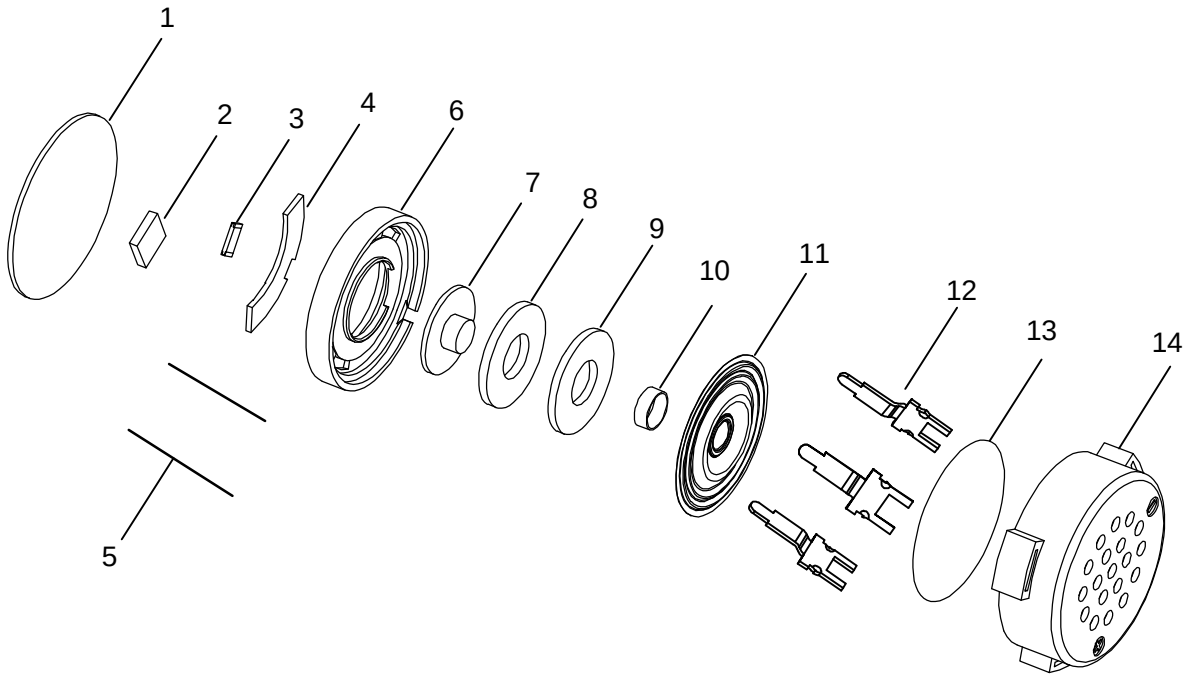

No	Parts Name	Material
1	Cover	PA66+30%GF
2	Foam	Sponge
3	SMD resistor	Cu
4	PCB	Epoxy and Cu(plating Sn)
5	Braided Wire	CU
6	Frame	Plastic MPPO+20%GF
7	Yoke	SPCC
8	Magnet	Nd-Fe-B
9	Piece	SPCC
10	Voice Coil	Cu
11	Diaphragm	PEI δ=0.05mm
12	Pin	H62Brass(plating Sn)
13	Dustproof sheet	SILK
14	Housing	PA66+30%GF

				Date:	2015/12/28	BDT3063H10 LF
				Drawn by:	王昌安	
C	2015/12/28	王昌安		Checked by:	莫丽丽	Speaker
Rev.	Date	Drawn	Note	Approved by:	张秀琴	
BESTAR HOLDING CO.,LTD www.bestargroups.com wu@be-star.com					DRG NO: BS/TES01.1482C	Page:07 of 11

This print and information there in are proprietary to BeStar Holding Co., Ltd. and shall not be used in whole or in part without its written content

BDT3063H10 LF

5. Reliability test

5.1 High temperature storage test

Temperature	+85°C
Duration	96hrs

5.2 Low temperature storage test

Temperature	-40°C
Duration	96h

Room temperature placed over 2 hours after the inspection.

5.3 Hot and cold shock test

Number of cycles 5cycles

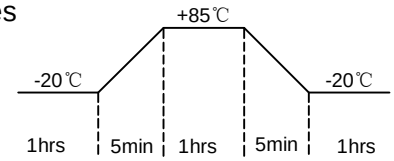

5.4 Vibration test:Non-work state vibration test

Rage of frequency	10 to 55Hz
Amplitude	1.5mm
Duration	2h each of 3 axis

5.5 Drop test

Height	1m

Free fall in the concrete surface,total 3 times.

5.6 Packing protection test

Height	1m
Duration	3 times each of 6 surface(total 18 times)

5.7 High temperature working test

Temperature	+85 ℃
Duration	48h(working state)

5.8 Low temperature working test

Temperature	-40 ℃
Duration	48h(working state)

5.9 High temperature and high humidity working test

Temperature	+65℃
Humidity	95%RH
Duration	48h(working state)

This print and information there in are proprietary to BeStar Holding Co., Ltd. and shall not be used in whole or in part without its written content

Rev.	Date	Drawn	Note		
				Date:	2015/12/28
				Drawn by:	王昌安
C	2015/12/28	王昌安		Checked by:	莫丽丽
				Approved by:	张秀琴

BESTAR HOLDING CO.,LTD www.bestargroups.com wu@be-star.com

BDT3063H10 LF

Speaker

DRG NO: BS/TES01.1482C

文件号：BS/QDTE045B

BDT3063H10 LF

5. Reliability test

5.10 Life test

Temperature	+75℃
Duration	240h(working state)

5.11 Extureme pressure test

Temperature	+25℃
Duration	30min(work under maximum limit voltage)

5.12 Salt spray test

Brine Density	5%
Duration	96h

Conclusion:

After each test of 5.1 to 5.3,room temperature placed over 2 hours after the inspection.Product appearance,structure,not unusually,resonance frequency and output SPL meet the specification requirements.

After test of 5.4,Product appearance,structure,not unusually,(solder joints without falls off phenomenon),resonance frequency and output SPL meet the specification requirements.

After test of 5.5,5.10 and 5.11,Resonance frequency and output SPL meet the specification requirements.

After test of 5.6,the inner packaging and the packaging unit is not loose.Product appearance,structure,not unusually,resonance frequency and output SPL meet the specification requirements.

After test of 5.7,room temperature placed over 2 hours after the inspection,products need to work in the +85 ℃ high temperature.Room temperature placed over 2 hours after the inspection.Product appearance,structure,not unusually,resonance frequency and output SPL meet the specification requirements.

After test of 5.8,room temperature placed over 2 hours after the inspection,products need to work in the -40 ℃ high temperature.Room temperature placed over 2 hours after the inspection.Product appearance,structure,not unusually,resonance frequency and output SPL meet the specification requirements.

After test of 5.9,room temperature placed over 2 hours after the inspection,products need to work in the high temperature environment.Room temperature placed over 2 hours after the inspection.Product appearance,structure,not unusually,resonance frequency and output SPL meet the specification requirements.

This print and information there in are proprietary to BeStar Holding Co., Ltd. and shall not be used in whole or in part without its written content

				Date:	2015/12/28	BDT3063H10 LF
				Drawn by:	王昌安	
C	2015/12/28	王昌安		Checked by:	莫丽丽	Speaker
Rev.	Date	Drawn	Note	Approved by:	张秀琴	
BESTAR HOLDING CO.,LTD www.bestargroups.com wu@be-star.com						DRG NO: BS/TES01.1482C / Page:09 of 11

BDT3063H10 LF

6. Packing

6.1 Packing Drawing

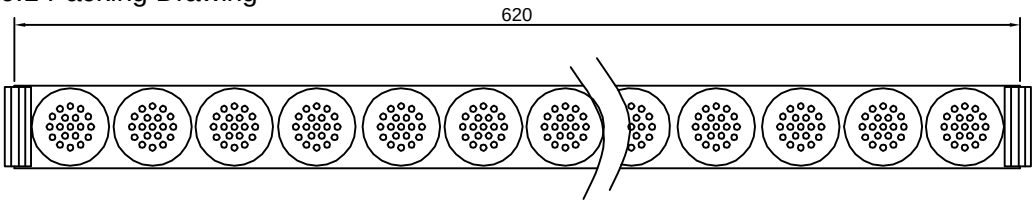

1. Magazine resistance pressure of static electricity: $\leqslant 10^{10}\ \Omega / cm^{2}$
2. All loudspeaker in one magazine must have the same polarity direction

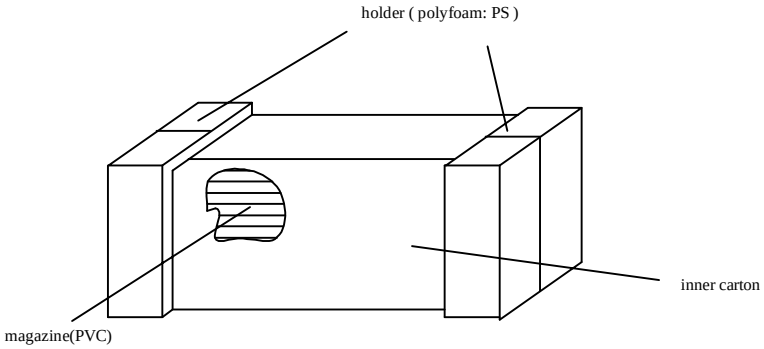

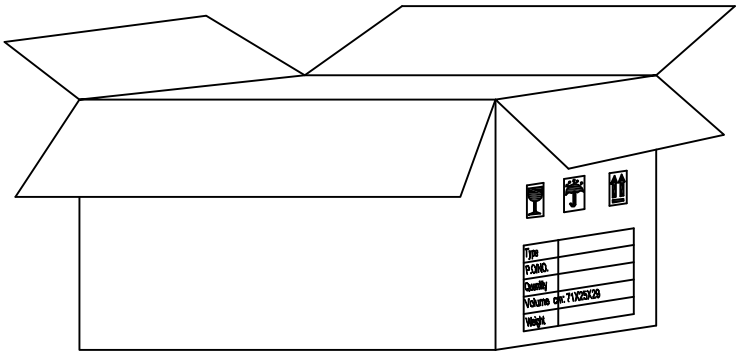

6.2 packing quantity

1)19pcs per tube,
2) 40pcs tube per carton
3) 760pcs per carton,
4)inner carton size:64x18x21cm
5) carton size: 71X25X29cm

This print and information there in are proprietary to BeStar Holding Co., Ltd. and shall not be used in whole or in part without its written content

				Date:	2015/12/28	BDT3063H10 LF
				Drawn by:	王昌安	
C	2015/12/28	王昌安		Checked by:	莫丽丽	Speaker
Rev.	Date	Drawn	Note	Approved by:	张秀琴	
BESTAR HOLDING CO.,LTD www.bestargroups.com wu@be-star.com						DRG NO: BS/TES01.1482C / Page:10 of 11

BDT3063H10 LF

7. History change record

version No.	Change Items		Date	Drawn	Approved
	Before	After			
A			2015/05/26	王昌安	徐金国
B		add SPL at162Hz,265Hz 312Hz,400Hz	2015/11/03	王昌安	张秀琴
C	Coil resistance （20℃）	Resistance （20℃）	2015/12/28	王昌安	张秀琴

This print and information there in are proprietary to BeStar Holding Co., Ltd. and shall not be used in whole or in part without its written content

				Date:	2015/12/28
				Drawn by:	王昌安
C	2015/12/28	王昌安		Checked by:	莫丽丽
Rev.	Date	Drawn	Note	Approved by:	张秀琴

BESTAR HOLDING CO.,LTD www.bestargroups.com wu@be-star.com

BDT3063H10 LF

Speaker

DRG NO: BS/TES01.1482C

文件号：BS/QDTE045B