SPECIFICATION

BDT38.5-11B-08H20-BOX

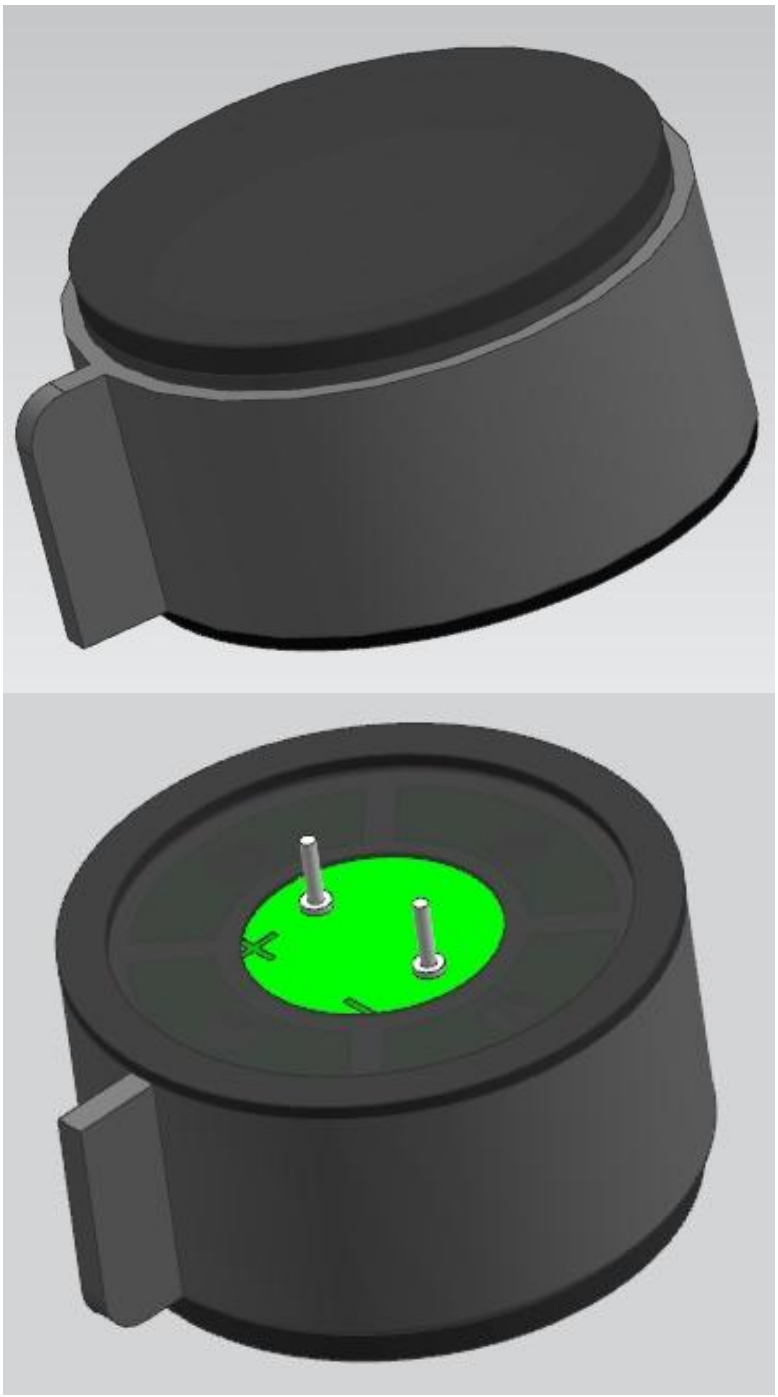

文件号：BS/QDTE045B

BeStar	SPECIFICATION FOR AUTOMOTIVE SPEAKER			
	TOTAL PAGE	10	www.be-star.com	RoHS

Preliminary Specification

Customer		Model Name	BDT38.5-11B-08H20-BOX
Customer P/N		Product No.	130126
Date	30 Oct 2017	Issue No.	BS/TES01.1667B
Page	01 of 10	Issue Date	2017.10.30

Approval：

1.Characteristics
2.Bill of Material
3.Drawing
4.Reliability Test
5.Packing
6.History Change Record

Drawn by	Checked by	Approved by	Customer approved
毛钰麒	莫丽丽	徐金国	

BESTAR HOLDING CO.,LTD
No.199 HuangHe West Road,New district,ChangZhou,JiangSu Province,P.R.China
Tel: +86 519 88222567 ***Fax:*** +86 519 88222551
E-mail:wu@be-star.com ***http://www.be-star.com***

BDT38.5-11B-08H20-BOX

1.Characteristics

1.1 Electrical and Mechanical Characteristics

No.	Item	Specifications
1.	Size	ϕ38.5*20mm
2.	Impedance at 1.0KHz	8±15% Ω
3.	Lowest Resonance frequency	400±20%Hz
4.	Effective frequency range	fo...20K Hz
5.	Rated input power	1.5w
6.	Maximum input power	2w
7.	Buzz & Rattle(at sine wave 3.4V)	must be normal between F0~20KHz
8.	SPL(1W,0.1m)	95±3dB（average at 0.8K 1.0K 1.2K 1.5K Hz）
9.	THD	≤10% (at 1KHz/ 1W/0.1m)
10.	Weight	≈13.6g
11.	Operating temperature	-40...+ 105°C
12.	Storage temperature	-40...+ 105°C

Notice:The product is used in vehicle, household appliance and so on.

1.2 Test Method

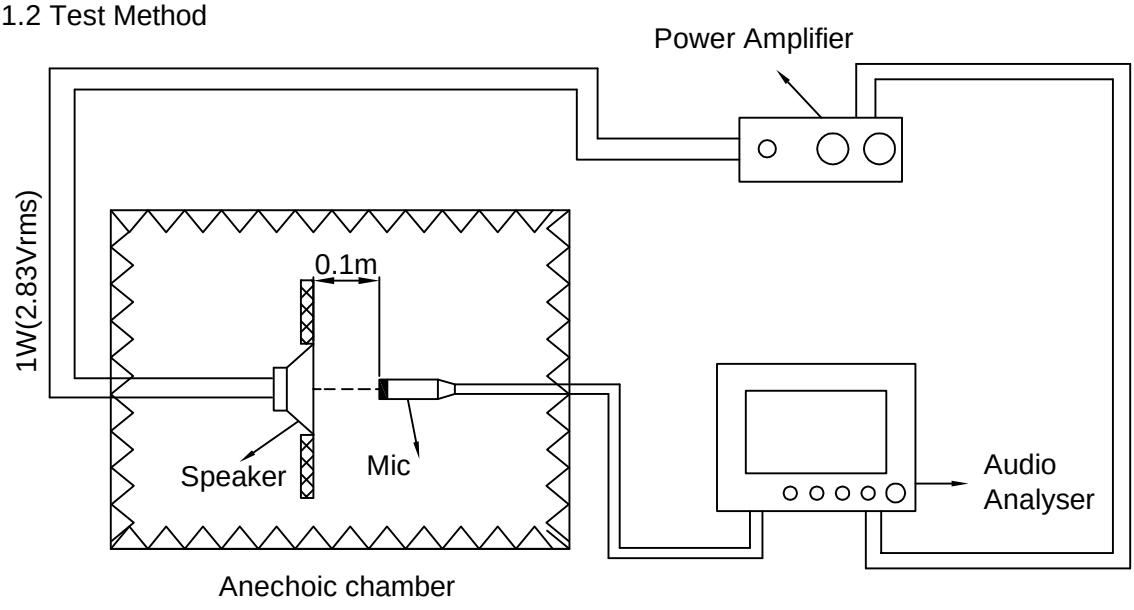

This print and information there in are proprietary to BeStar Holding Co., Ltd. and shall not be used in whole or in part without its written content

				Date:	2017.10.30	BDT38.5-11B-08H20-BOX
				Drawn by:	毛钰麒	
B	2017.10.30	毛钰麒		Checked by:	莫丽丽	Speaker
Rev.	Date	Drawn	Note	Approved by:	徐金国	
BESTAR HOLDING CO.,LTD www.be-star.com wu@be-star.com						DRG NO: BS/TES01.1667B / Page:02 of 10

BDT38.5-11B-08H20-BOX

1.3 Fundamental (1W/0.1m SOUNDCHECK testing)

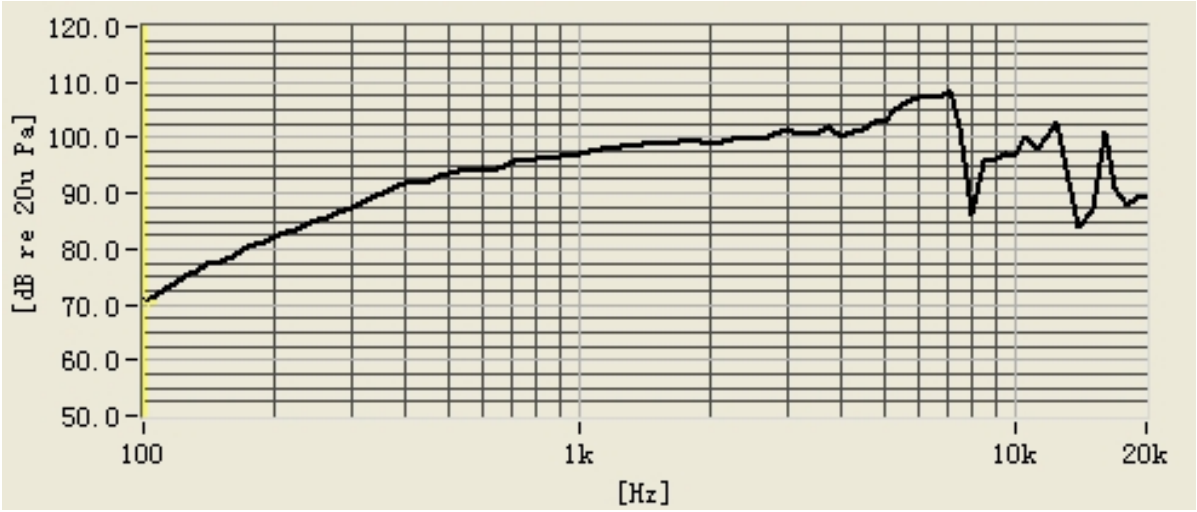

1.4 THD (1W/0.1m SOUNDCHECK testing)

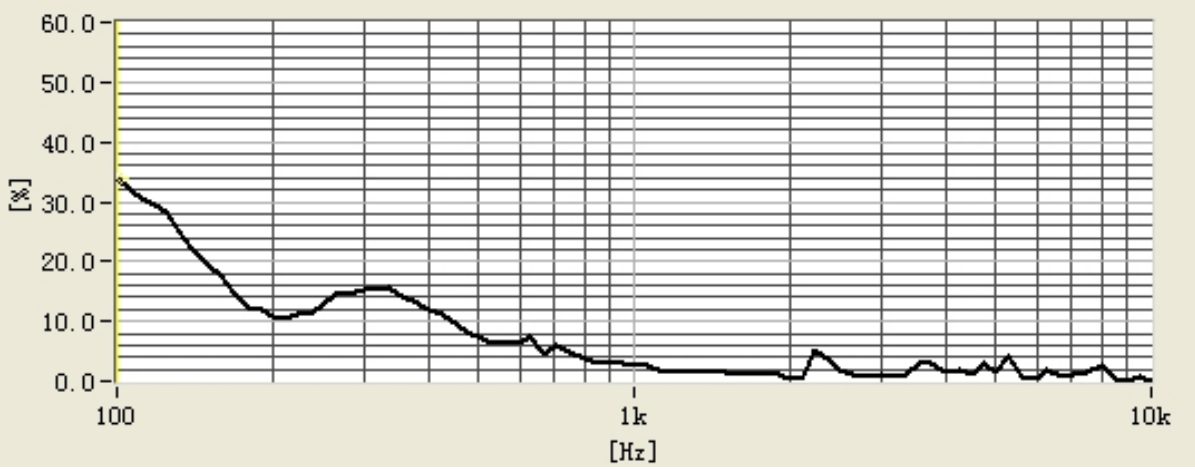

This print and information there in are proprietary to BeStar Holding Co., Ltd. and shall not be used in whole or in part without its written content

				Date:	2017.10.30	BDT38.5-11B-08H20-BOX
				Drawn by:	毛钰麒	
B	2017.10.30	毛钰麒		Checked by:	莫丽丽	Speaker
Rev.	Date	Drawn	Note	Approved by:	徐金国	
BESTAR HOLDING CO.,LTD www.be-star.com wu@be-star.com						DRG NO: BS/TES01.1667B / Page:03 of 10

BDT38.5-11B-08H20-BOX

1.5 Impedance (1W/0.1m SOUNDCHECK testing)

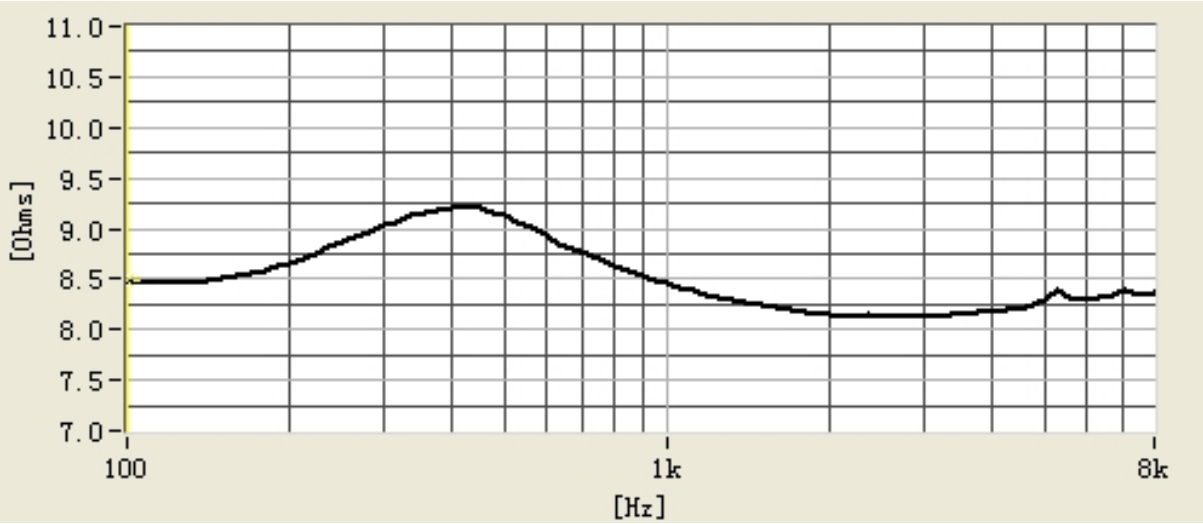

1.6 Rub&buzz (1W/0.1m SOUNDCHECK testing)

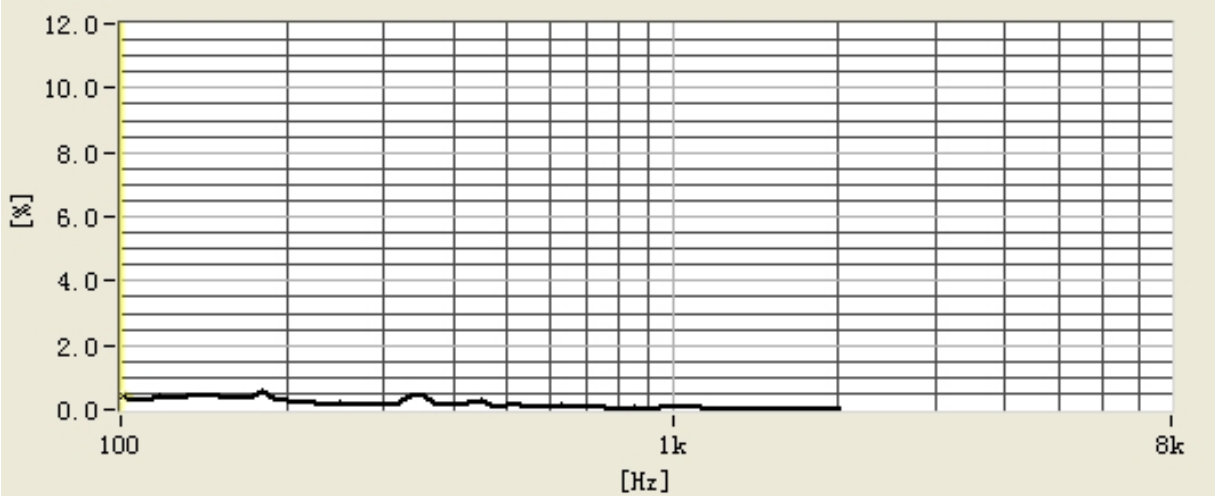

This print and information there in are proprietary to BeStar Holding Co., Ltd. and shall not be used in whole or in part without its written content

				Date:	2017.10.30	BDT38.5-11B-08H20-BOX
				Drawn by:	毛钰麒	
B	2017.10.30	毛钰麒		Checked by:	莫丽丽	Speaker
Rev.	Date	Drawn	Note	Approved by:	徐金国	
BESTAR HOLDING CO.,LTD www.be-star.com wu@be-star.com						DRG NO: BS/TES01.1667B / Page:04 of 10

BDT38.5-11B-08H20-BOX

2.Bill of Material

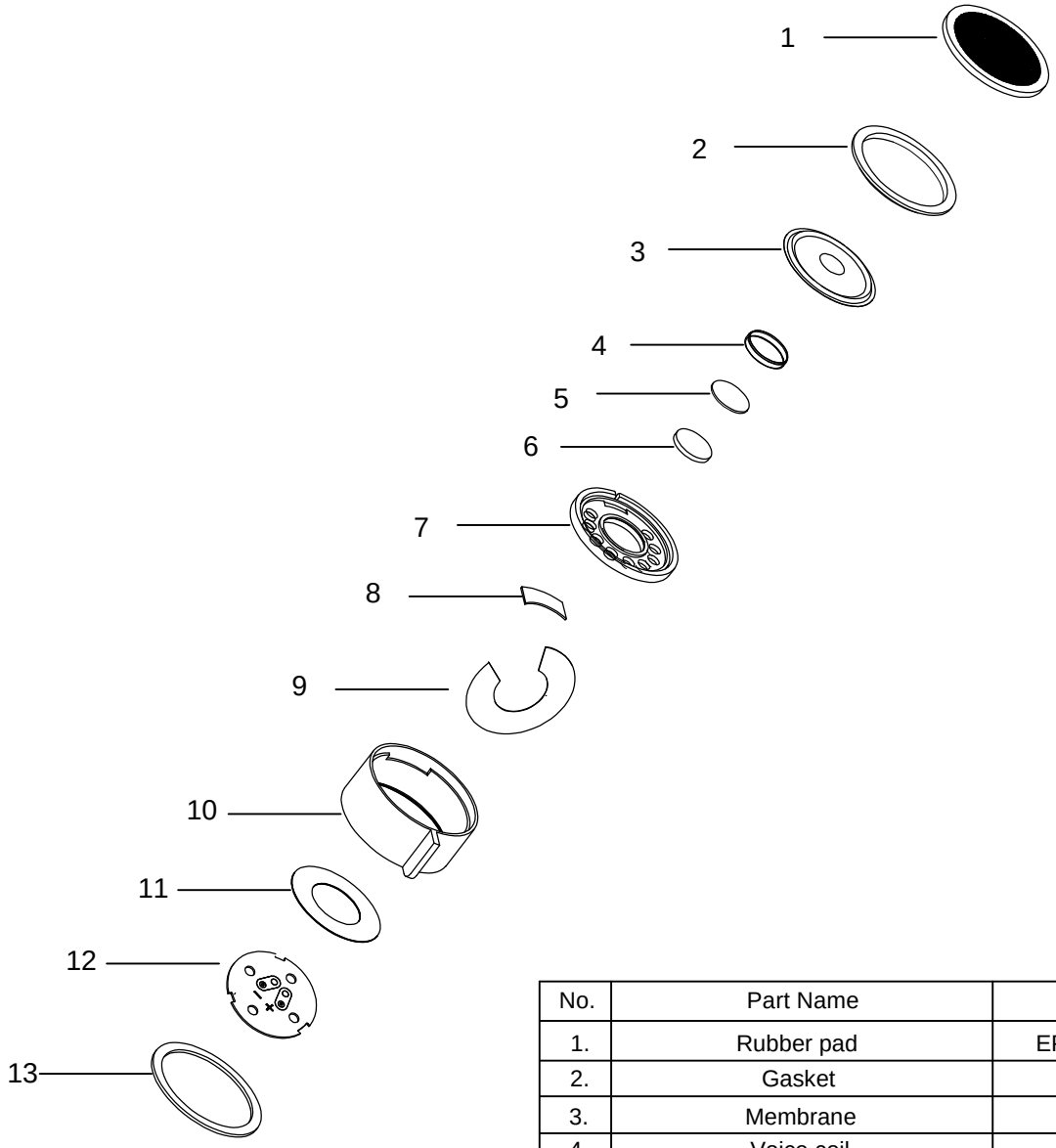

No.	Part Name	Material
1.	Rubber pad	EPDM+non-woven
2.	Gasket	PBT+30%GF
3.	Membrane	PEI
4.	Voice coil	Cu
5.	Up Plate	SPCC
6.	Magnet	Nd-Fe-B
7.	Frame	Black MPPO+15%GF
8.	PCB	Ethoxyline+Cu
9.	Dustproof Sheet	Black non-woven
10.	BOX	PBT+30%GF
11.	Dustproof Sheet	Black non-woven
12.	Pcb and Pin	Ethoxyline+Cu
13.	Foam	EPDM

				Date:	2017.10.30	BDT38.5-11B-08H20-BOX
				Drawn by:	毛钰麒	
B	2017.10.30	毛钰麒		Checked by:	莫丽丽	Speaker
Rev.	Date	Drawn	Note	Approved by:	徐金国	
BESTAR HOLDING CO.,LTD www.be-star.com wu@be-star.com					DRG NO: BS/TES01.1667B	Page:05 of 10

This print and information there in are proprietary to BeStar Holding Co., Ltd. and shall not be used in whole or in part without its written content

BDT38.5-11B-08H20-BOX

3.Drawing

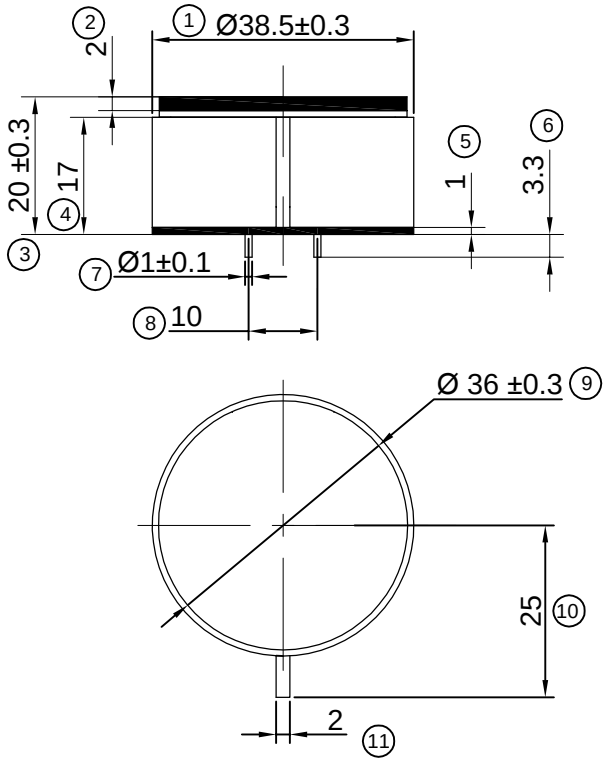

Customer PCB layout

Tol：±0.25

Unit：mm

This print and information there in are proprietary to BeStar Holding Co., Ltd. and shall not be used in whole or in part without its written content

				Date:	2017.10.30	BDT38.5-11B-08H20-BOX
				Drawn by:	毛钰麒	
B	2017.10.30	毛钰麒		Checked by:	莫丽丽	Speaker
Rev.	Date	Drawn	Note	Approved by:	徐金国	
BESTAR HOLDING CO.,LTD www.be-star.com wu@be-star.com						DRG NO: BS/TES01.1667B / Page:06 of 10

This print and information there in are proprietary to BeStar Holding Co., Ltd. and shall not be used in whole or in part without its written content

BDT38.5-11B-08H20-BOX

4. Reliability Test

4.1 Load Test

Power	1.5W (sine wave)
Duration	96hrs

4.2 High temp. preservation — Exposure to 105℃ for 96 hours.

4.3 Low temp. preservation — Exposure to -40℃ for 96 hours.

4.4 High/low temperature storage Test

t_1=48h t_2=48h t_3=1h

T_A=-40°C T_B=+85°C T_C=+90°C 1°C/min，1 cycle

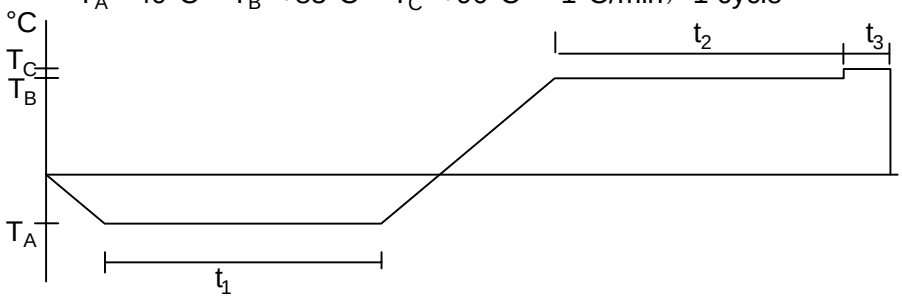

4.5 Temperature shock Test

t1=2h, t2<10s, TA=-40℃, TB=+105℃,

Cycle 100

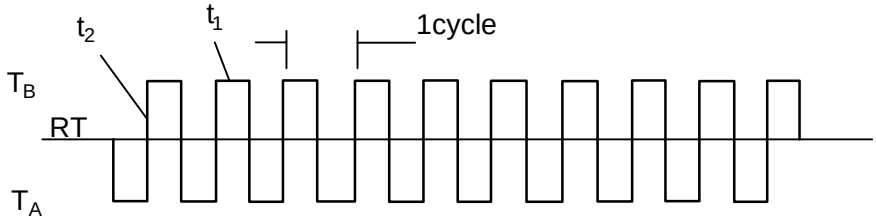

4.6 Temperature cycle Test

t1=2.5h, 1.5℃/min,

TA=-40℃, TB=+80℃, test 20 cycles

Cl.15 ON=2.5h, Cl.15 Off=0.5h

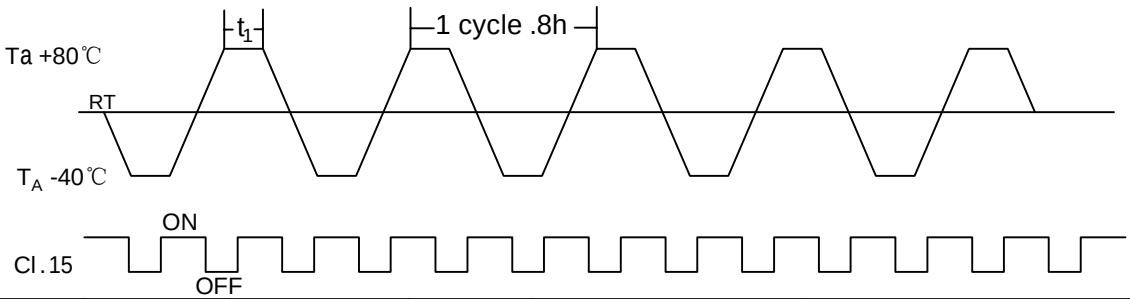

				Date:	2017.10.30	BDT38.5-11B-08H20-BOX
				Drawn by:	毛钰麒	
B	2017.10.30	毛钰麒		Checked by:	莫丽丽	Speaker
Rev.	Date	Drawn	Note	Approved by:	徐金国	
BESTAR HOLDING CO.,LTD				www.be-star.com wu@be-star.com		DRG NO: BS/TES01.1667B / Page:07 of 10

BDT38.5-11B-08H20-BOX

4.7 Temperature humidity Test

1Cycle=24h Test 6 Cycle

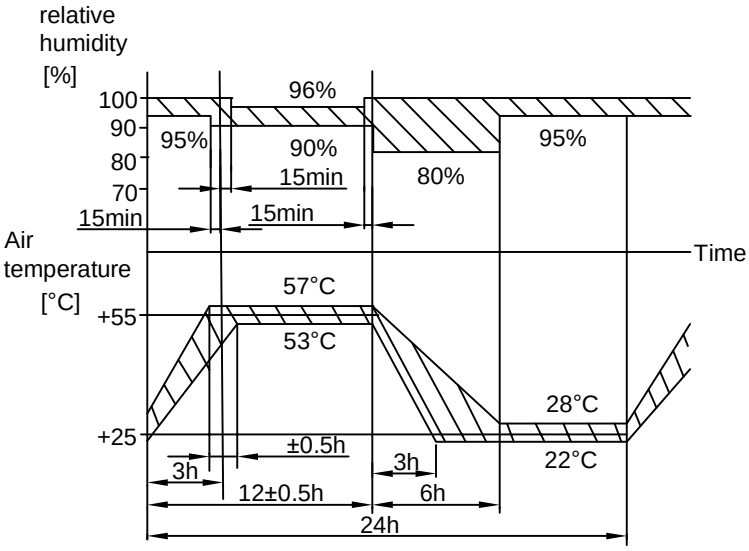

4.8 Vibration Test

10-50Hz Sinewave， Sweep 15min , X、Y、Z

3Direction 2 hours each,Total 6hours 。

4.9 Solder Heat Resistance

Solder temperature: 350±10 ℃

Soaking time: 3.5±0.5sec

4.10 Free drop Test

Free drop on concrete 100cm height.X.Y.Z every surface x 1 times,Total 3times.

4.11 Solderability

Pretreatment: 40 ℃,90~95%RH x 240hours

Soldering into solderbath:Solder Temp. 265±5 ℃

Soaking Time 2±0.5sec

4.12 Terminal strength

Pulled in the direction along the pin axis.(22.2N)

Notice：

1.Being placed for 24 hours at +25 ℃, speaker shall be measured. No obstacle to be harmful to normal operation;damages, cracks, rusts, etc. Should not be audible at 3.4V sine wave between Fo ~ 20KHz. Fo should meet initial one. S.P.L. deviation of unit should be within 3dB.

2.After Solderability Test,95% surface of leade pins must be covered with fresh solder and no soldering holess should be found.

3.After Terminal strength Test,no damage and cutting off.

This print and information there in are proprietary to BeStar Holding Co., Ltd. and shall not be used in whole or in part without its written content

				Date:	2017.10.30	BDT38.5-11B-08H20-BOX
				Drawn by:	毛钰麒	
B	2017.10.30	毛钰麒		Checked by:	莫丽丽	Speaker
Rev.	Date	Drawn	Note	Approved by:	徐金国	
BESTAR HOLDING CO.,LTD www.be-star.com wu@be-star.com					DRG NO: BS/TES01.1667B	Page:08 of 10

BDT38.5-11B-08H20-BOX

5. Packing

5.1 Packing Drawing

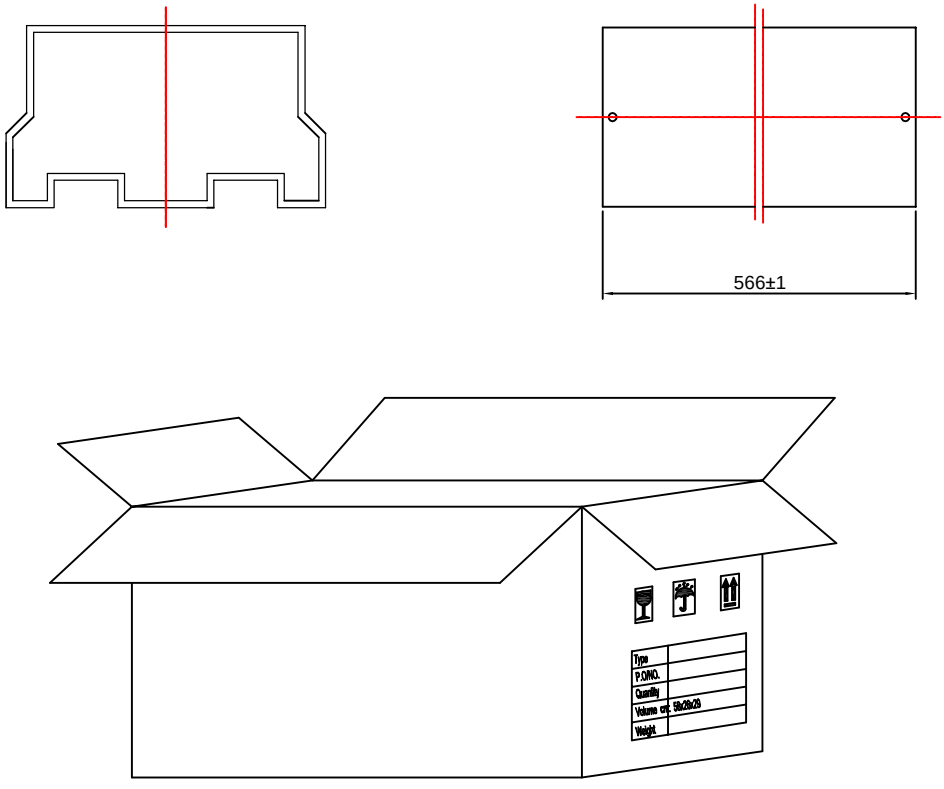

5.2 packing quantity

1) 14pcs per magazine
2) 50pcs magazine per carton
3) 700pcs per carton,
4) carton size: 58X26X29cm

This print and information there in are proprietary to BeStar Holding Co., Ltd. and shall not be used in whole or in part without its written content

				Date:	2017.10.30	BDT38.5-11B-08H20-BOX
				Drawn by:	毛钰麒	
B	2017.10.30	毛钰麒		Checked by:	莫丽丽	Speaker
Rev.	Date	Drawn	Note	Approved by:	徐金国	
BESTAR HOLDING CO.,LTD www.be-star.com wu@be-star.com					DRG NO: BS/TES01.1667B	Page:09 of 10

BDT38.5-11B-08H20-BOX

6. History Change Record

version No.	Change Items		Date	Drawn	Approved
	Before	After			
A			2017.03.13	毛钰麒	徐金国
B	Rubber pad no Black non-woven	Rubber pad add Black non-woven	2017.10.30	毛钰麒	徐金国

This print and information there in are proprietary to BeStar Holding Co., Ltd. and shall not be used in whole or in part without its written content

				Date:	2017.10.30
				Drawn by:	毛钰麒
B	2017.10.30	毛钰麒		Checked by:	莫丽丽
Rev.	Date	Drawn	Note	Approved by:	徐金国

BESTAR HOLDING CO.,LTD www.be-star.com wu@be-star.com

BDT38.5-11B-08H20-BOX

Speaker

DRG NO: BS/TES01.1667B

文件号：BS/QDTE045B