BeStar	SPECIFICATION FOR DYNAMIC SPEAKER			
	TOTAL PAGE	07	www.be-star.com	RoHS

Customer		Model Name	BLS18-11-04H7.8W110 LF
Customer P/N		Product No.	127904
Date	26 Apr. 13	Issue No.	BS/TES01.1233A
Page	01 of 07	Issue Date	2013/04/26

Approval：

1.Description
2.Characteristics
3.Drawing
4.Reliability test
5.Packing
6.History Change Record

Drawn by	Checked by	Approved by	Customer approved

BESTAR ACOUSTICS CO.,LTD

No.199 HuangHe West Road,New district,ChangZhou,JiangSu Province,P.R.China

Tel: +86 519 88222567 ***Fax:*** +86 519 88222551

E-mail:wu@be-star.com ***http://www.be-star.com***

BLS18-11-04H7.8W110 LF

1.Description

1.1 Acoustic component Performance Specification

1.2 The present document specifies performance requirements for the acoustic characteristics of speaker

2.Characteristics

2.1 Electrical and Mechanical Characteristics

No.	Item	Specifications
1.	Size	Ø18*7.8mm
2.	Impedance at 1KHz	4±0.6 Ω
3.	Resonance frequency	550±20%Hz
4.	Operating frequency range	fo...20KHz
5.	Rated input power	1.5W
6.	Maximum input power	2.0W
7.	Buzz & Rattle(at sine wave 2.45V)	must be normal
8.	SPL(1W,0.3M)	84± 3dB(at0.6、0.8、1.0、1.2 KHz)
9.	Polarity	Positive voltage to (+),
		the diaphragm move forward
10.	Cone	Rubber
11.	Magnet	Nd-Fe-B
10.	Operating temperature	-20...+60°C
11.	Storage temperature	-30...+70°C

2.2 Test Method

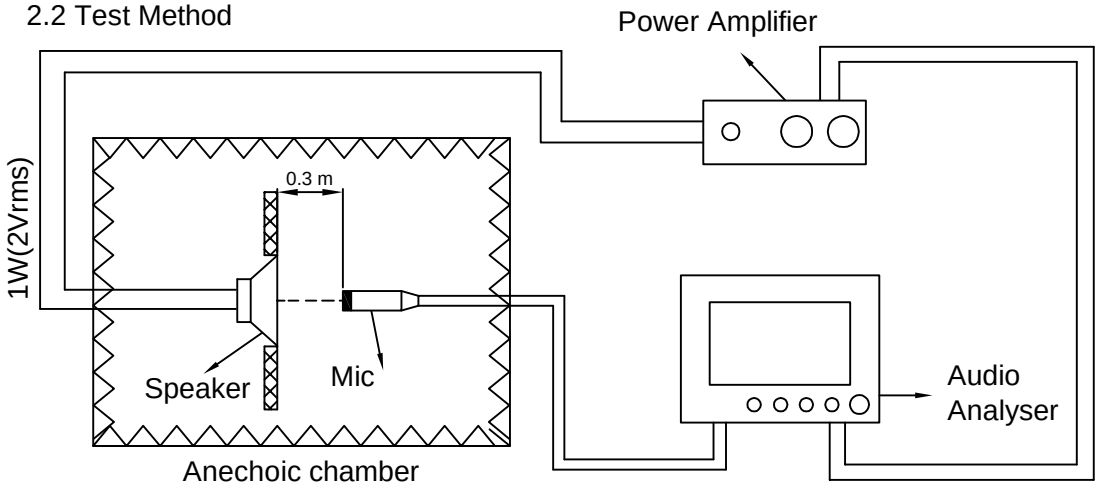

This print and information there in are proprietary to Bestar Electronics Industry Co., Ltd. and shall not be used in whole or in part without its written content

				Date:	2013/04/26	BLS18-11-04H7.8W110 LF
				Drawn by:	汪凤声	
A	2013/04/26	汪凤声		Checked by:	王 平	Speaker
Rev.	Date	Drawn	Note	Approved by:	张秀琴	
BESTAR ACOUSTICS CO.,LTD www.be-star.com wu@be-star.com						DRG NO:BS/TES01.1233A / Page:02 of 07

BLS18-11-04H7.8W110 LF

2.3 Frequency Response Curve (only for reference)

A: Frequency Response Magn 0 dB re 20.00 μPa/V 1/12Oct

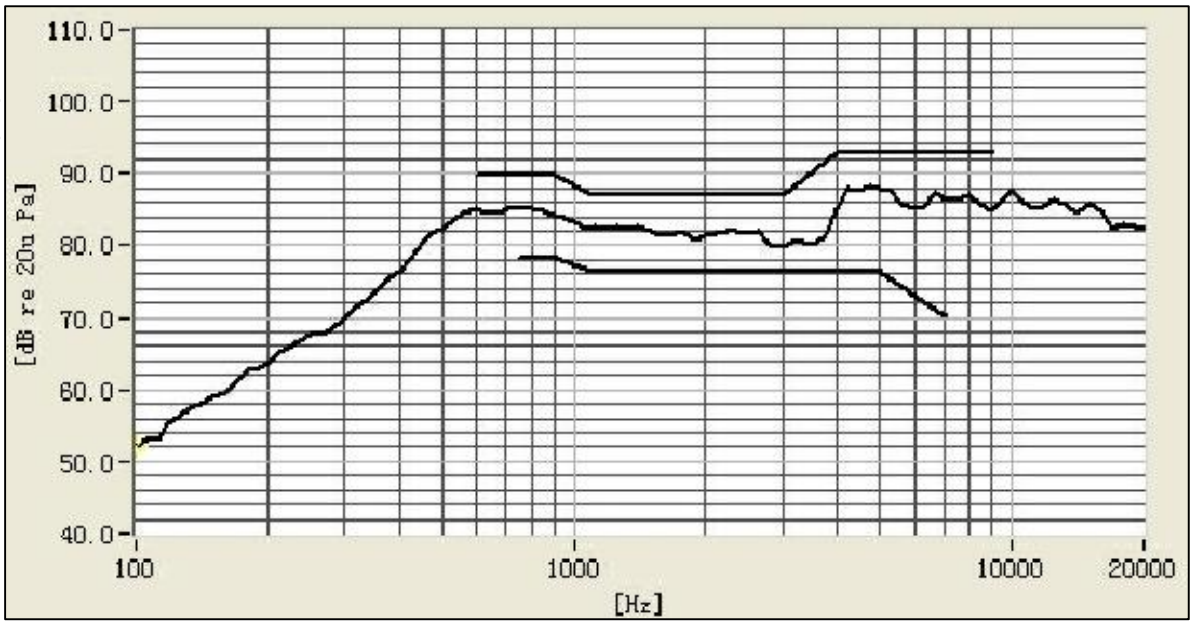

Frequency (Hz)

2.4 Resonance Frequency Curve

A: Frequency Response Magn 0 dB re 20.00 μPa/V 1/12Oct

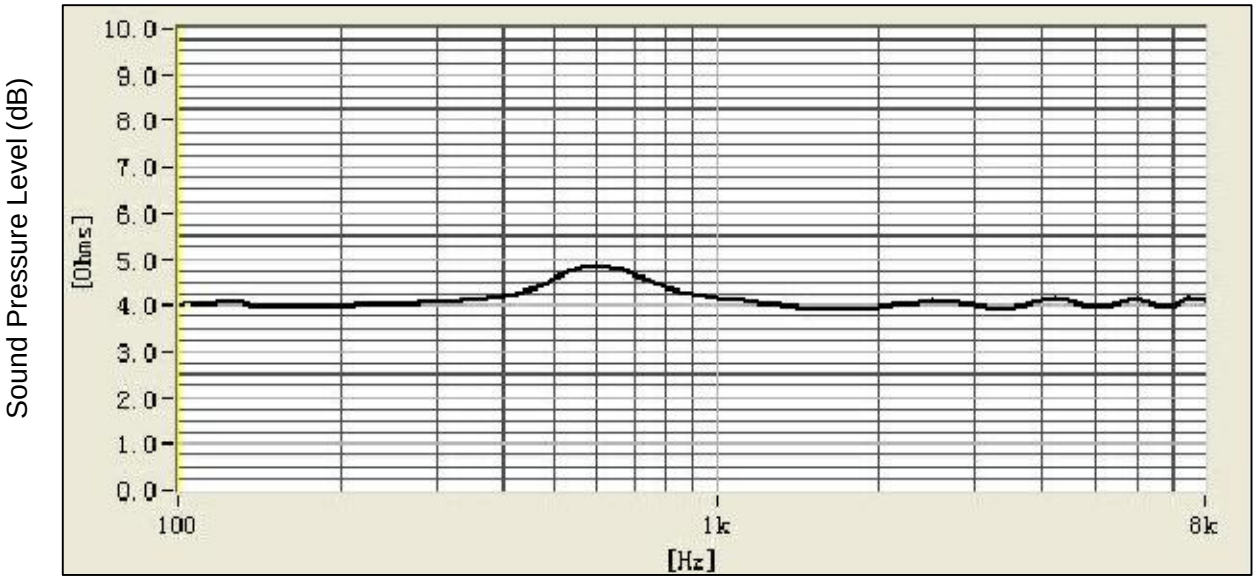

Frequency (Hz)

				Date:	2013/04/26	BLS18-11-04H7.8W110 LF
				Drawn by:	汪凤声	
A	2013/04/26	汪凤声		Checked by:	王 平	Speaker
Rev.	Date	Drawn	Note	Approved by:	张秀琴	
BESTAR ACOUSTICS CO.,LTD www.be-star.com wu@be-star.com					DRG NO: BS/TES01.1233A	Page:03 of 07

This print and information there in are proprietary to Bestar Electronics Industry Co., Ltd. and shall not be used in whole or in part without its written content

BLS18-11-04H7.8W110 LF

3.Drawing

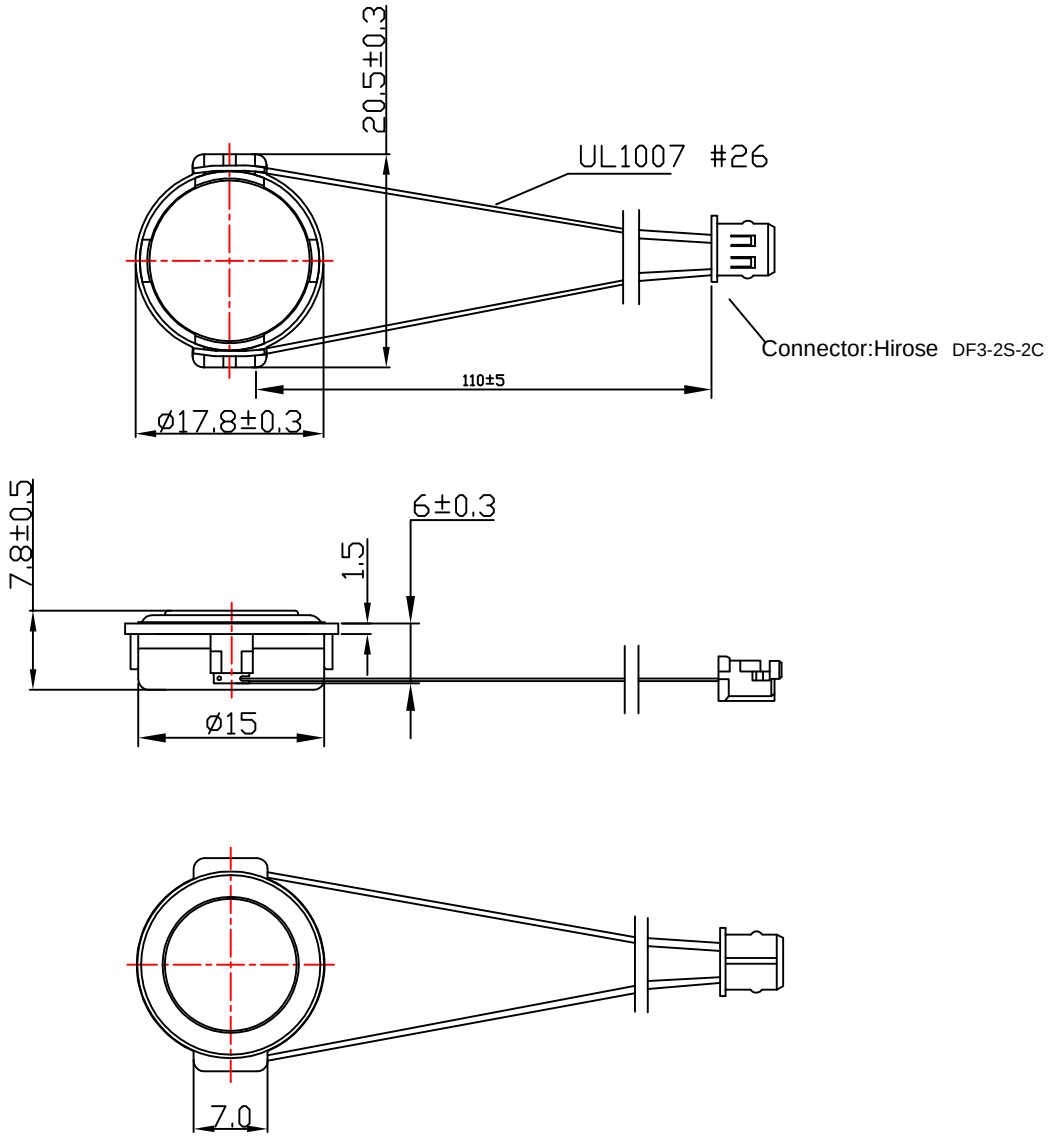

Unit:mm

This print and information there in are proprietary to Bestar Electronics Industry Co., Ltd. and shall not be used in whole or in part without its written content

				Date:	2013/04/26	BLS18-11-04H7.8W110 LF
				Drawn by:	汪凤声	
A	2013/04/26	汪凤声		Checked by:	王 平	Speaker
Rev.	Date	Drawn	Note	Approved by:	张秀琴	
BESTAR ACOUSTICS CO.,LTD www.be-star.com wu@be-star.com						DRG NO:BS/TES01.1233A / Page:04 of 07

BLS18-11-04H7.8W110 LF

4. Reliability Test

4.1 Load Test

Power	Pink noise with 500Hz low cut filter 1.5W
Duration	100hrs

4.2 High Temperature Test

Temperature	+70±3℃
Relative Humidity	20%-50%RH
Duration	16hrs

4.3 Low Temperature Test

Temperature	-20±3 ℃
Duration	16hrs

4.4 Damp Heat

Temperature	40±3℃
Relative Humidity	90%-95%RH
Duration	16hrs

4.5 Temperature Cycle Test

Cycle	4

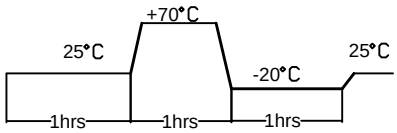

4.6 Drop Test

Height	100cm (in state of packing)
Times	10 (Drop onto hardwood board)

All these tests above should be measured after leaving normal temperature for 1hrs.

sensitivity difference at 1kHz shall be within ±3dB from initial value after test.

This print and information there in are proprietary to Bestar Electronics Industry Co., Ltd. and shall not be used in whole or in part without its written content

				Date:	2013/04/26	BLS18-11-04H7.8W110 LF
				Drawn by:	汪凤声	
A	2013/04/26	汪凤声		Checked by:	王 平	Speaker
Rev.	Date	Drawn	Note	Approved by:	张秀琴	
BESTAR ACOUSTICS CO.,LTD www.be-star.com wu@be-star.com						DRG NO:BS/TES01.1233A / Page:05 of 07

BLS18-11-04H7.8W110 LF

5. Packing

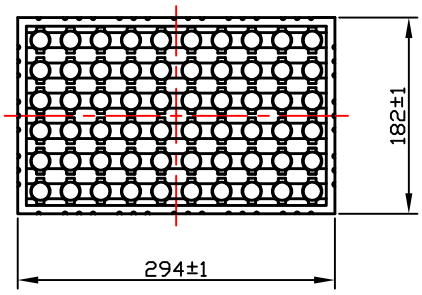

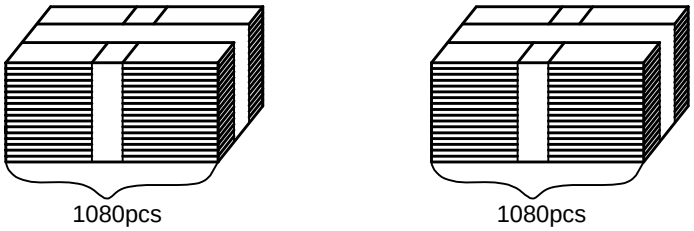

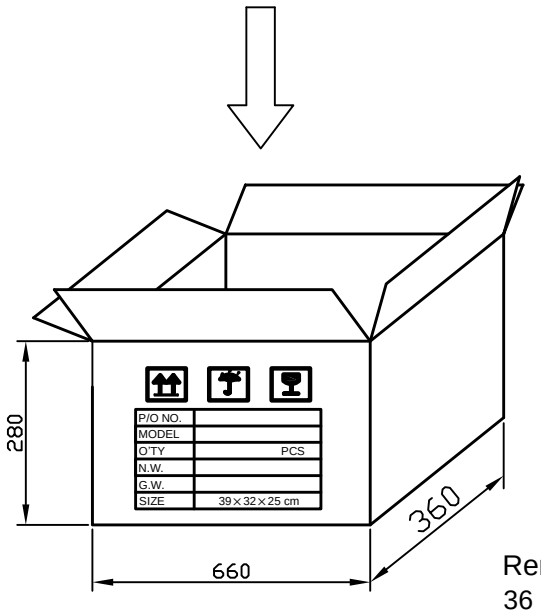

Remark:
36 pcs per tray
15 trays for unit, 4 units per carton
Total 2160pcs per carton
Size: 66×36×28(cm)

This print and information there in are proprietary to Bestar Electronics Industry Co., Ltd. and shall not be used in whole or in part without its written content

				Date:	2013/04/26	BLS18-11-04H7.8W110 LF
				Drawn by:	汪凤声	
A	2013/04/26	汪凤声		Checked by:	王 平	Speaker
Rev.	Date	Drawn	Note	Approved by:	张秀琴	
BESTAR ACOUSTICS CO.,LTD www.be-star.com wu@be-star.com						DRG NO:BS/TES01.1233A / Page:06 of 07

BLS18-11-04H7.8W110 LF

6. History change record

version No.	Change Items		Date	Drawn	Approved
	Before	After			
A			2013/04/26	汪凤声	张秀琴

This print and information there in are proprietary to Bestar Electronics Industry Co., Ltd. and shall not be used in whole or in part without its written content

				Date:	2013/04/26	BLS18-11-04H7.8W110 LF
				Drawn by:	汪凤声	
A	2013/04/26	汪凤声		Checked by:	王 平	Speaker
Rev.	Date	Drawn	Note	Approved by:	张秀琴	
BESTAR ACOUSTICS CO.,LTD www.be-star.com wu@be-star.com						DRG NO:BS/TES01.1233A / Page:07 of 07