BeStar	SPECIFICATION FOR DYNAMIC Speaker			
	TOTAL PAGE	06	www.bestargroups.com	

Preliminary Specification For The Acoustic Characteristics of dynamic Speaker

Customer		Model Name	BLS40-12-08H18 LF
Customer P/N		Product No.	
Date	20 Oct. 17	Issue No.	BS/TES01.XXXXA
Page	01 of 06	Issue Date	2017/10/20

Approval：

1.Technical Terms
2.Drawing
3.Reliability Test
4.Packing
5.History Change Record

Drawn by	Checked by	Approved by	Customer approved

BESTAR HOLDING CO.,LTD
No.199 HuangHe West Road,New district,ChangZhou,JiangSu Province,P.R.China
Tel: +86 519 88222567 ***Fax:*** +86 519 88222551
E-mail:wu@be-star.com ***http://www.bestargroups.com***

BLS40-12-08H18 LF



1.Technical Terms

No.	Item	Specification
1.	Impedance(at 2.0kHz)	8 ±15%Ω
2.	Rated Input Power	2.0W
3.	Maximum Input Power	3.0W
4.	Resonance Frequency	250 ±20%Hz
5.	Frequency Response	F0 ～10KHz
6.	Output SPL	80± 3dB （0.5m/1W Ave at 0.8 , 1.0 , 1.2 , 1.5KHz）
7.	THD	＜10%（at 1KHz/1.0W/0.5m）
8.	Buzzes & Rattles	must be normal at sine wave 2.0W from 250~15KHz
10.	Operating Temperature	-20...+65 °C
11.	Storage Temperature	-30...+70 °C

1.2 Test Method

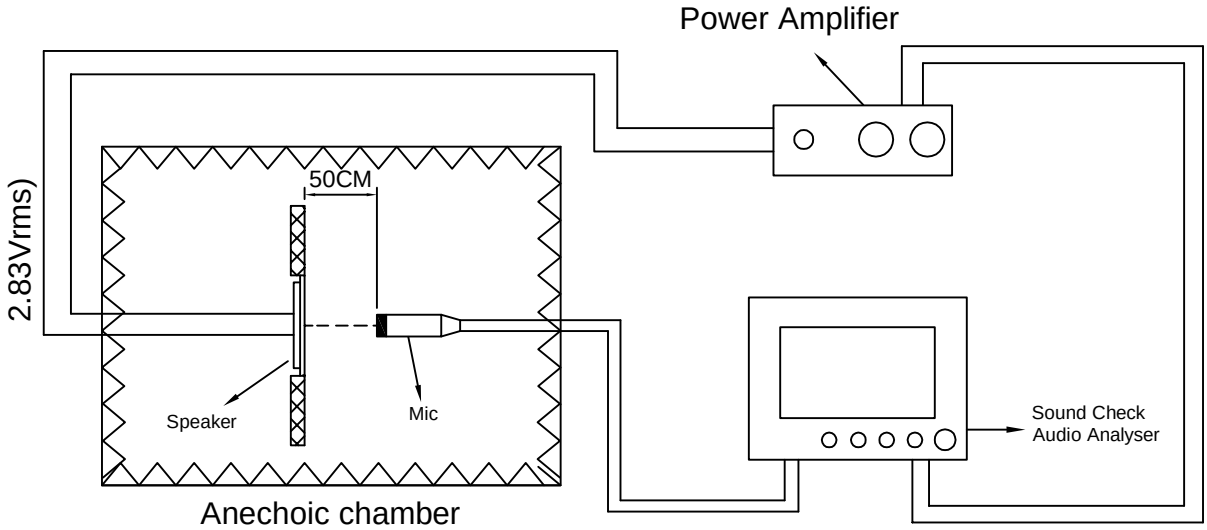

This print and information there in are proprietary to BeStar Holding Co., Ltd. and shall not be used in whole or in part without its written content

				Date:	2017/10/20	BLS40-12-08H18 LF
				Drawn by:	张翔捷	
A	2017/10/20	张翔捷		Checked by:	王 平	Speaker
Rev.	Date	Drawn	Note	Approved by:	徐金国	
BESTAR HOLDING CO.,LTD				www.bestargroups.com wu@be-star.com		DRG NO:BS/TES01.XXXXA / Page:02 of 06

BLS40-12-08H18 LF

1.3 Frequency Response Curve (only for reference)

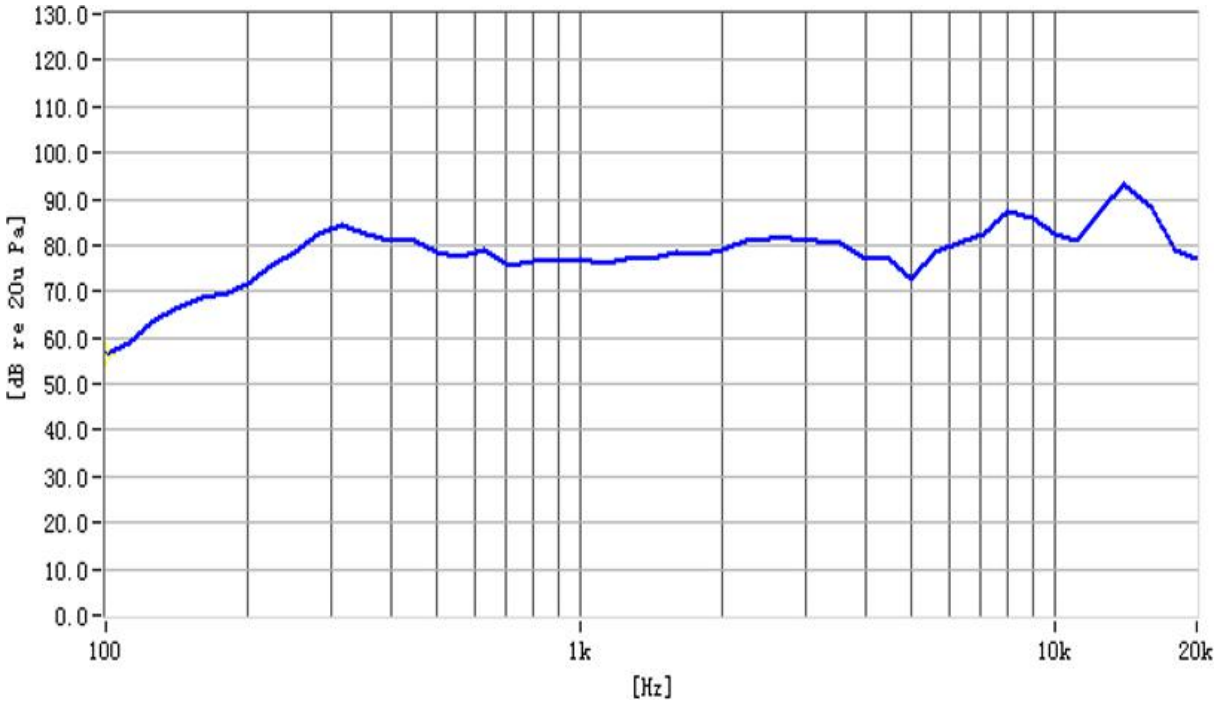

2.Drawing

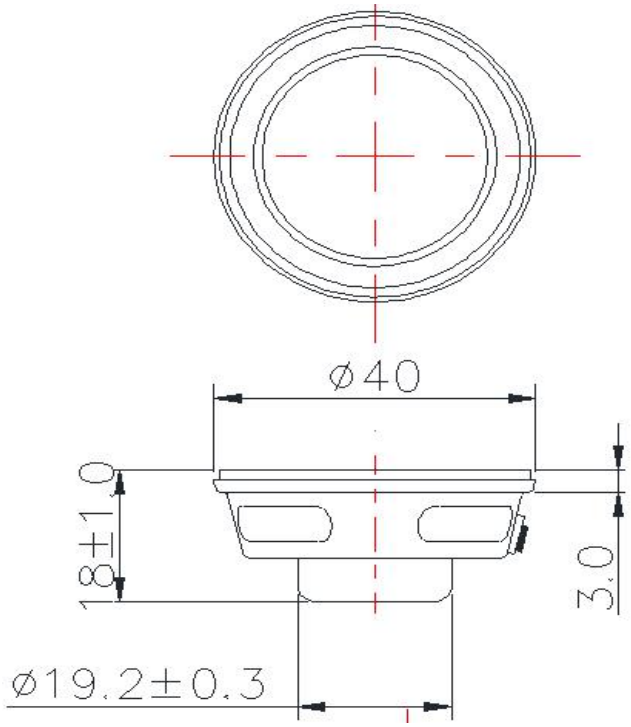

Unit:mm
Tolerance:±0.5

				Date:	2017/10/20	BLS40-12-08H18 LF
				Drawn by:	张翔捷	
A	2017/10/20	张翔捷		Checked by:	王 平	Speaker
Rev.	Date	Drawn	Note	Approved by:	徐金国	
BESTAR HOLDING CO.,LTD				www.bestargroups.com wu@be-star.com		DRG NO:BS/TES01.XXXXA / Page:03 of 06

This print and information there in are proprietary to BeStar Holding Co., Ltd. and shall not be used in whole or in part without its written content

BLS40-12-08H18 LF

3. Reliability Test

3.1 Load Test

Power	2W white noise
Duration	96hrs

3.2 High Temperature Test

Temperature	+70±3℃
Duration	96hrs

3.3 Low Temperature Test

Temperature	-20±3 ℃
Duration	96hrs

3.4 Damp Heat

Temperature	40±3℃
Relative Humidity	90%-95%RH
Duration	96hrs

3.5 Temperature Cycle Test

Cycle	5

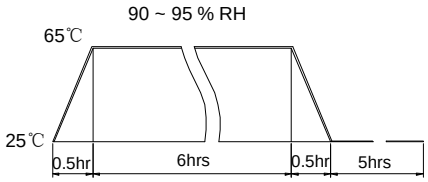

3.6 Drop Test

Height	75cm (in state of packing)
Times	10 (Drop onto hardwood board)

Notice:

1.All these tests above should be measured after leaving normal temperature for 2hrs.

2.sensitivity difference at 1kHz shall be within ±3dB from initial value after test.

3.The gluing on the speaker wires must fully cover the terminals

				Date:	2017/10/20	BLS40-12-08H18 LF
				Drawn by:	张翔捷	
A	2017/10/20	张翔捷		Checked by:	王 平	Speaker
Rev.	Date	Drawn	Note	Approved by:	徐金国	
BESTAR HOLDING CO.,LTD www.bestargroups.com wu@be-star.com					DRG NO:BS/TES01.XXXXA	Page:04 of 06

This print and information there in are proprietary to BeStar Holding Co., Ltd. and shall not be used in whole or in part without its written content

BLS40-12-08H18 LF

4. Packing

TBD

This print and information there in are proprietary to BeStar Holding Co., Ltd. and shall not be used in whole or in part without its written content

				Date:	2017/10/20	BLS40-12-08H18 LF
				Drawn by:	张翔捷	
A	2017/10/20	张翔捷		Checked by:	王　平	Speaker
Rev.	Date	Drawn	Note	Approved by:	徐金国	
BESTAR HOLDING CO.,LTD www.bestargroups.com wu@be-star.com						DRG NO:BS/TES01.XXXXA / Page:05 of 06

文件号：BS/ODTE045B

BLS40-12-08H18 LF

5. History change record

version No.	Change Items		Date	Drawn	Approved
	Before	After			
A			17/10/20	张翔捷	徐金国

This print and information there in are proprietary to BeStar Holding Co., Ltd. and shall not be used in whole or in part without its written content

				Date:	2017/10/20	BLS40-12-08H18 LF
				Drawn by:	张翔捷	
A	2017/10/20	张翔捷		Checked by:	王 平	Speaker
Rev.	Date	Drawn	Note	Approved by:	徐金国	