BeStar	SPECIFICATION FOR DYNAMIC Speaker			
	TOTAL PAGE	06	www.bestargroups.com	

Preliminary Specification For The Acoustic Characteristics of dynamic Speaker

Customer		Model Name	BMS28-12-04H7.5 LF
Customer P/N		Product No.	
Date	24 Aug. 16	Issue No.	BS/TES01.XXXA
Page	01 of 06	Issue Date	2016/08/24

Approval：

1.Technical Terms
2.Drawing
3.Reliability Test
4.Packing
5.History Change Record

Drawn by	Checked by	Approved by	Customer approved
孙 烨	王 平	张秀琴	

BESTAR HOLDING CO.,LTD
No.199 HuangHe West Road,New district,ChangZhou,JiangSu Province,P.R.China
Tel: +86 519 88222567 ***Fax:*** +86 519 88222551
E-mail:wu@be-star.com ***http://www.bestargroups.com***

BMS28-12-04H7.5 LF

1.Technical Terms

No.	Item	Specification
1.	Impedance(at 1kHz)	4±15%Ω
2.	Rated Input Power	2W
3.	Maximum Input Power	3W
4.	Resonance Frequency	300±20%Hz
5.	Frequency Response	F0～8KHz
6.	Output SPL	80± 3dB（0.5m/1W Ave at 0.8 1.0 1.2 1.5KHz）
7.	THD	≤5%(at 1KHz)
8.	Buzzes & Rattles	Must be normal at sine wave 2.83V
9.	Magnet	Rare earth permanent (NdFeB) magnet φ15.5*2.2mm
10.	Operating Temperature	-20...+60° C
11.	Storage Temperature	-30...+70° C

1.2 Test Method

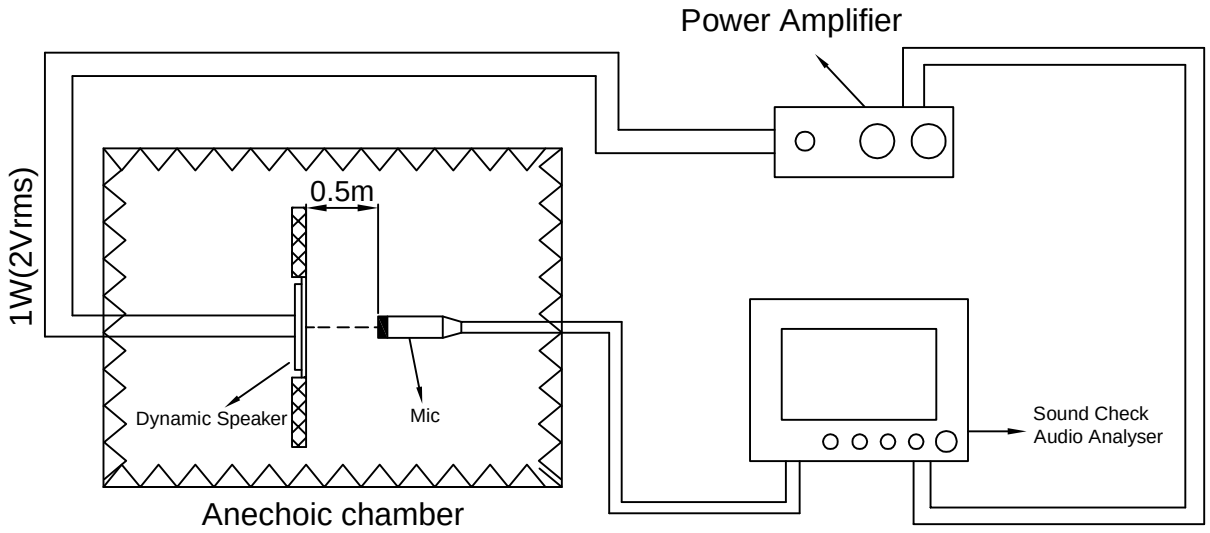

				Date:	2016/08/24	BMS28-12-04H7.5 LF
				Drawn by:	孙 烨	
A	2016/08/24	孙 烨		Checked by:	王 平	Speaker
Rev.	Date	Drawn	Note	Approved by:	张秀琴	
BESTAR HOLDING CO.,LTD				www.bestargroups.com wu@be-star.com		DRG NO:BS/TES01.XXXA / Page:02 of 06

This print and information there in are proprietary to BeStar Holding Co., Ltd. and shall not be used in whole or in part without its written content

BMS28-12-04H7.5 LF

1.3 Frequency Response Curve (only for reference)

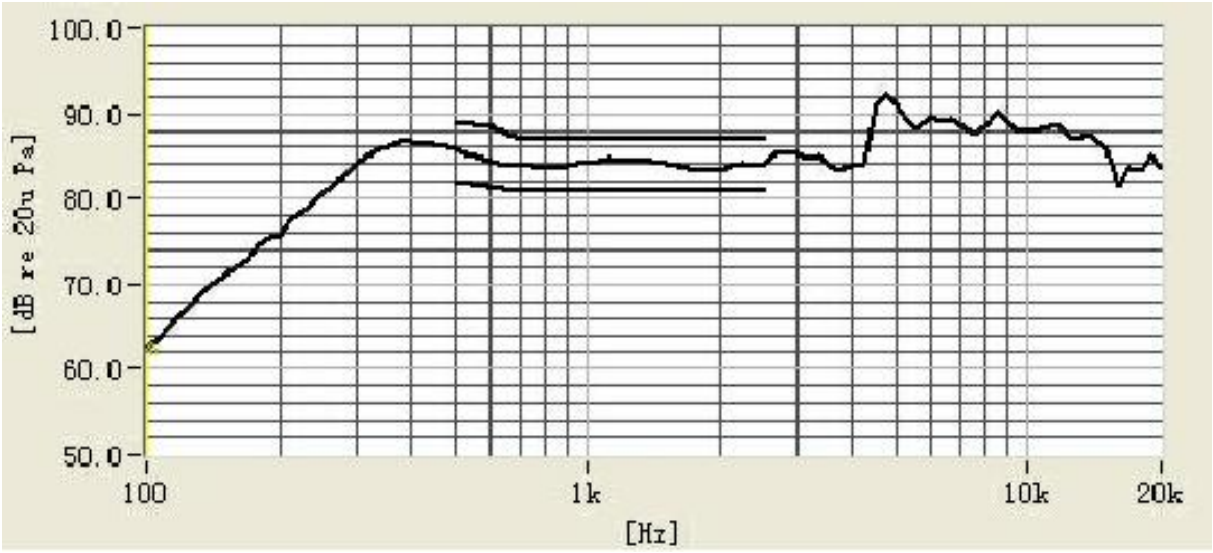

Frequency (Hz)

2.Drawing

2.1 Dimensions

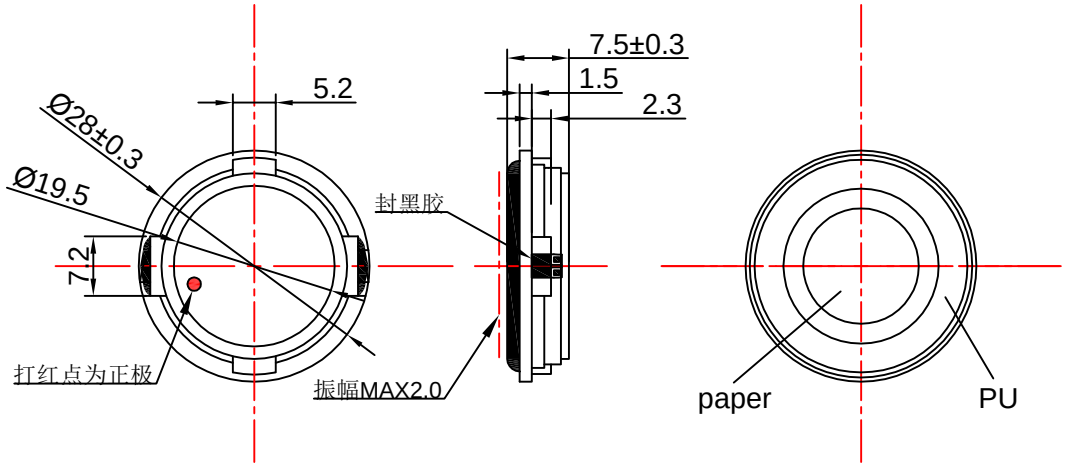

Unit:mm
Tolerance:±0.5

				Date:	2016/08/24	BMS28-12-04H7.5 LF
				Drawn by:	孙 烨	
A	2016/08/24	孙 烨		Checked by:	王 平	Speaker
Rev.	Date	Drawn	Note	Approved by:	张秀琴	
BESTAR HOLDING CO.,LTD			www.bestargroups.com wu@be-star.com		DRG NO:BS/TES01.XXXA	Page:03 of 06

This print and information there in are proprietary to BeStar Holding Co., Ltd. and shall not be used in whole or in part without its written content

BMS28-12-04H7.5 LF

3. Reliability Test

3.1 Load Test

Power	2W
Duration	24hrs

3.2 High Temperature Test

Temperature	+70±3℃
Duration	96hrs

3.3 Low Temperature Test

Temperature	-30±3℃
Duration	96hrs

3.4 Damp Heat

Temperature	+30±3℃
Relative Humidity	92%-95%RH
Duration	96hrs

3.5 Temperature Cycle Test

Cycle	5

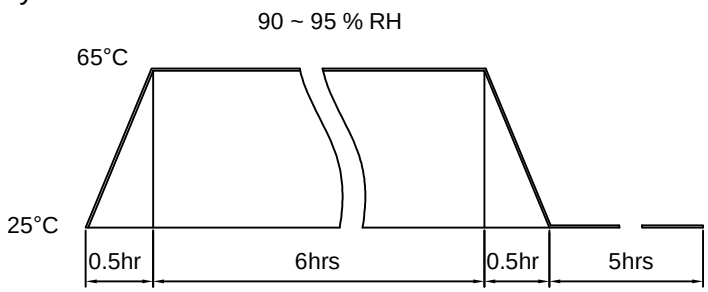

3.6 Drop Test

Height	75cm (in state of packing)
Times	10 (Drop onto hardwood board)

Notice:

1.All these tests above should be measured after leaving normal temperature for 2hrs.

2.sensitivity difference at 1kHz shall be within ±3dB from initial value after test.

3.The gluing on the speaker wires must fully cover the terminals

				Date:	2016/08/24	BMS28-12-04H7.5 LF
				Drawn by:	孙 烨	
A	2016/08/24	孙 烨		Checked by:	王 平	Speaker
Rev.	Date	Drawn	Note	Approved by:	张秀琴	
BESTAR HOLDING CO.,LTD www.bestargroups.com wu@be-star.com					DRG NO:BS/TES01.XXXA	Page:04of 06

This print and information there in are proprietary to BeStar Holding Co., Ltd. and shall not be used in whole or in part without its written content

BMS28-12-04H7.5 LF

4. Packing

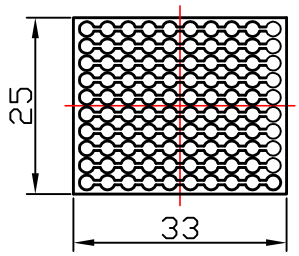

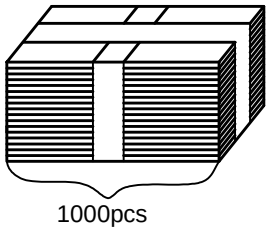

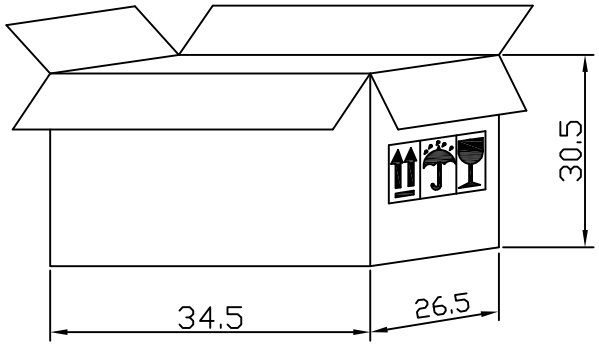

Remark:

50 pcs per tray

20 trays for unit，

Total:1000 pcs per box

Size:34.5*26.5*30.5cm

This print and information there in are proprietary to BeStar Holding Co., Ltd. and shall not be used in whole or in part without its written content

				Date:	2016/08/24	BMS28-12-04H7.5 LF
				Drawn by:	孙 烨	
A	2016/08/24	孙 烨		Checked by:	王 平	Speaker
Rev.	Date	Drawn	Note	Approved by:	张秀琴	
BESTAR HOLDING CO.,LTD www.bestargroups.com wu@be-star.com						DRG NO:BS/TES01.XXXA / Page:05 of 06

BMS28-12-04H7.5 LF

5. History change record

version No.	Change Items		Date	Drawn	Approved
	Before	After			
A			16 /08/24	孙 烨	张秀琴

This print and information there in are proprietary to BeStar Holding Co., Ltd. and shall not be used in whole or in part without its written content

				Date:	2016/08/24	BMS28-12-04H7.5 LF
				Drawn by:	孙 烨	
A	2016/08/24	孙 烨		Checked by:	王 平	Speaker
Rev.	Date	Drawn	Note	Approved by:	张秀琴	
BESTAR HOLDING CO.,LTD				www.bestargroups.com wu@be-star.com		DRG NO:BS/TES01.XXXA / Page:06 of 06