BeStar	SPECIFICATION FOR DYNAMIC SPEAKER			
	TOTAL PAGE	09	www.bestargroups.com	RoHS

Customer		Model Name	BMS28-12B-08H05CW152J LF
Customer P/N		Product No.	131433
Date	6 Jun. 18	Issue No.	BS/TES01.856C
Page	01 of 09	Issue Date	2018/06/06

Approval：

1.Characteristics
2.Drawing
3.Reliability Test
4.Packing
5.History Change Record

Drawn by	Checked by	Approved by	Customer approved
张翔捷	王 平	赵 峥	

BESTAR HOLDING CO.,LTD
No.199 HuangHe West Road,New district,ChangZhou,JiangSu Province,P.R.China
Tel: +86 519 88222567 ***Fax:*** +86 519 88222551
E-mail:wu@be-star.com ***http://www.bestargroups.com***

BMS28-12B-08H05CW152J LF



1. Characteristic

1.1 Electrical and Mechanical Characteristics

No.	Item	Specification
1.	Impedance(at 1kHz)	8±15% Ω
2.	Rated Input Power	0.8W
3.	Maximum Input Power	1.2W
4.	Resonance Frequency	650±20%Hz
5.	Frequency Response	F0 ～20KHz
6.	Output SPL（at 0.1W/0.1m）	90±3dB at 600 Hz
7.	Distortion （at 1kHz,0.5W）	≤ 5%
8.	Buzzes & Rattles	Must be normal at sine wave 2.53V
9.	Magnet	NdFeB
10.	Operating Temperature	-20...+70 °C
11.	Storage Temperature	-40...+85 °C

1.2 Test Method

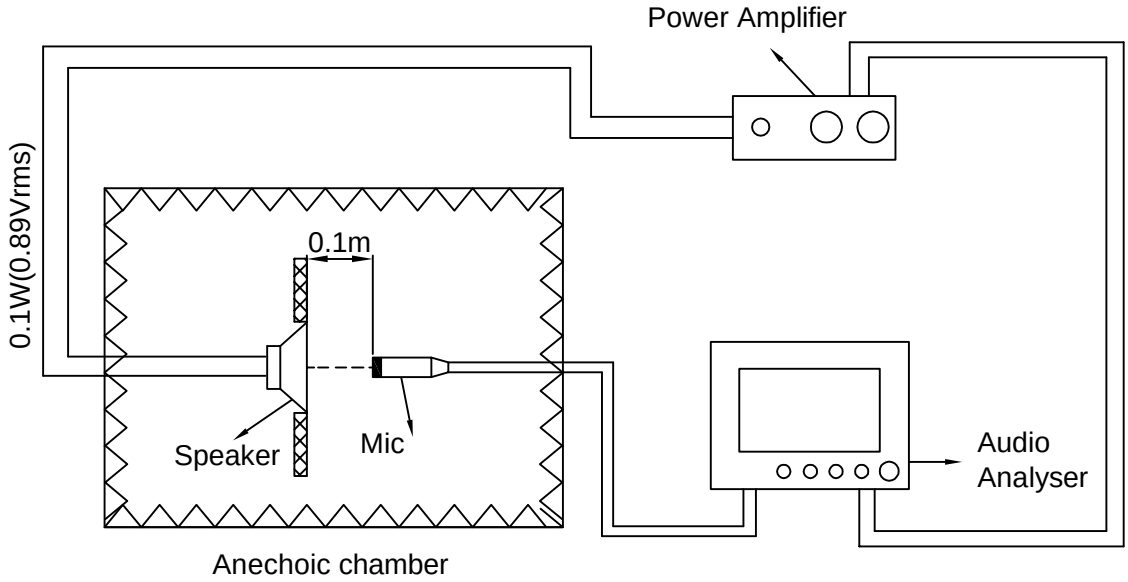

This print and information there in are proprietary to Bestar Holding Co., Ltd. and shall not be used in whole or in part without its written content

Rev.	Date	Drawn	Note			
C	2018/06/06	张翔捷	Change the wire	Date:	2018/06/06	BMS28-12B-08H05CW152J LF
B	2018/02/22	张翔捷	Change the test conditions	Drawn by:	张翔捷	
A	2017/10/06	张翔捷		Checked by:	王 平	Speaker
				Approved by:	赵 峥	

BESTAR HOLDING CO.,LTD www.bestargroups.com wu@be-star.com

DRG NO: BS/TES01.856C

BMS28-12B-08H05CW152J LF

1.3 Fundamental (0.1W/0.1m SOUNDCHECK testing)

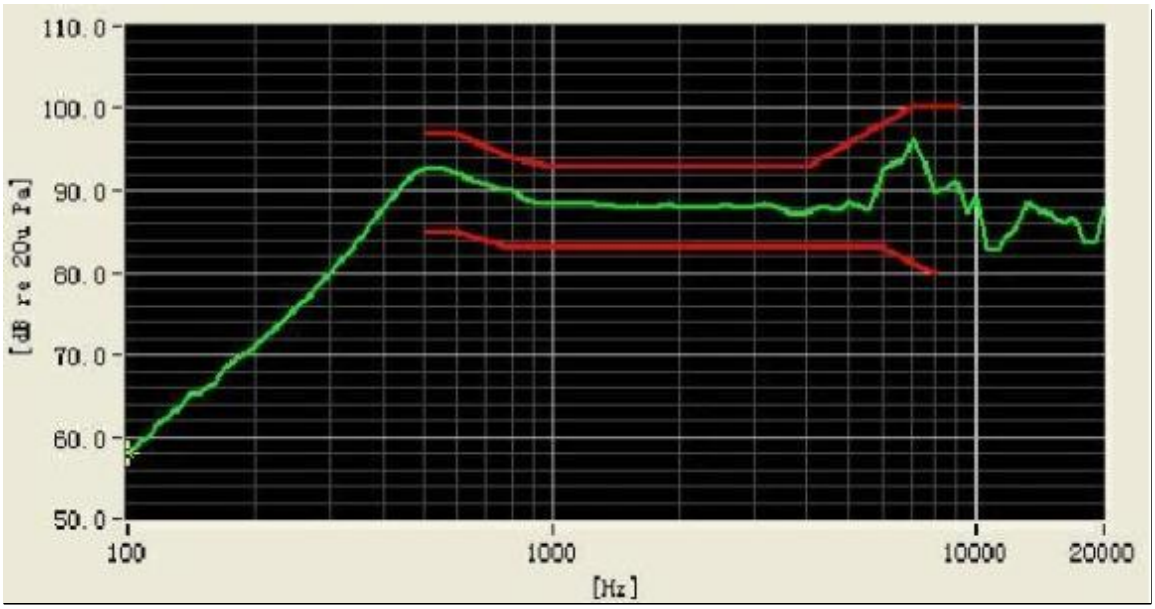

1.4 THD (0.1W/0.1m SOUNDCHECK testing)

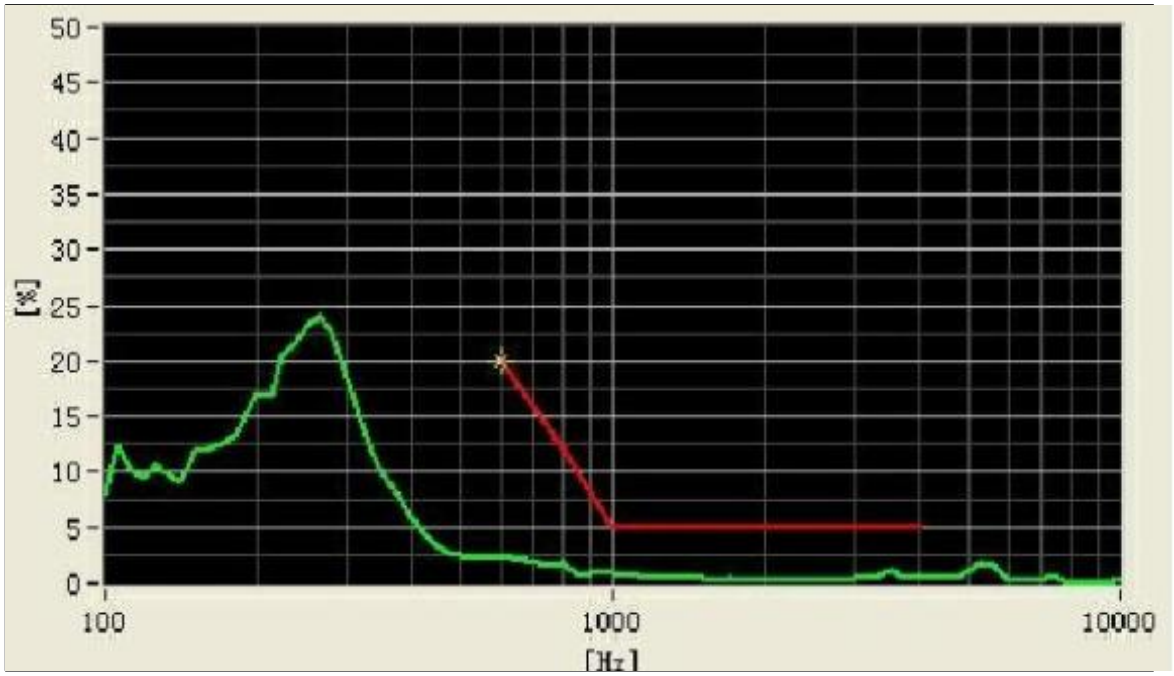

This print and information there in are proprietary to Bestar Holding Co., Ltd. and shall not be used in whole or in part without its written content

Rev.	Date	Drawn	Note		
C	2018/06/06	张翔捷	Change the wire	Date:	2018/06/06
B	2018/02/22	张翔捷	Change the test conditions	Drawn by:	张翔捷
A	2017/10/06	张翔捷		Checked by:	王 平
				Approved by:	赵 峥

BESTAR HOLDING CO.,LTD www.bestargroups.com wu@be-star.com

BMS28-12B-08H05CW152J LF

Speaker

DRG NO: BS/TES01.856C

BMS28-12B-08H05CW152J LF

1.5 Impedance (0.1W/0.1m SOUNDCHECK testing)

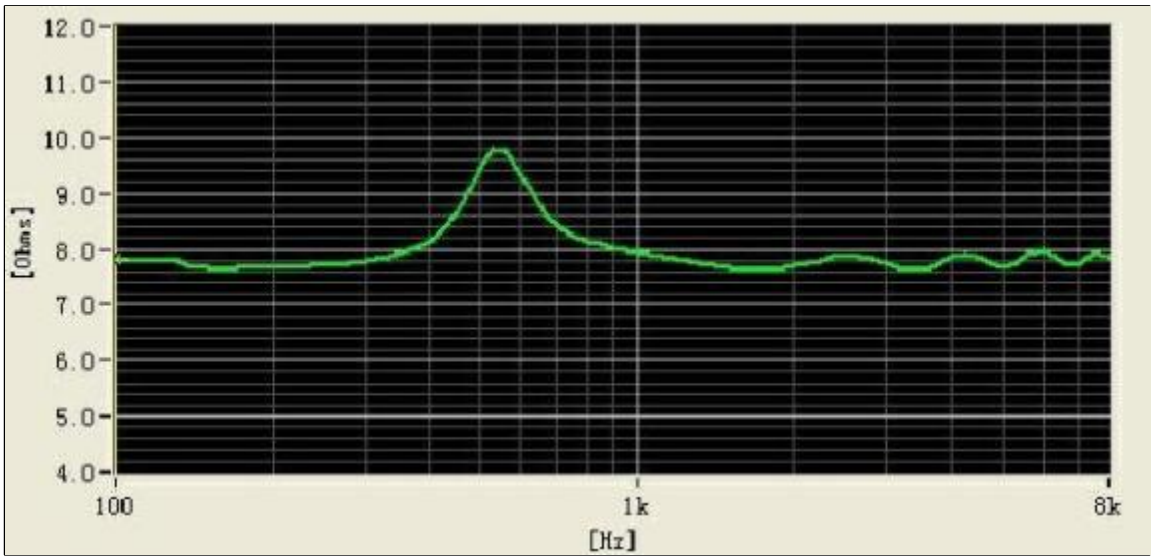

1.6 Rub&buzz (0.1W/0.1m SOUNDCHECK testing)

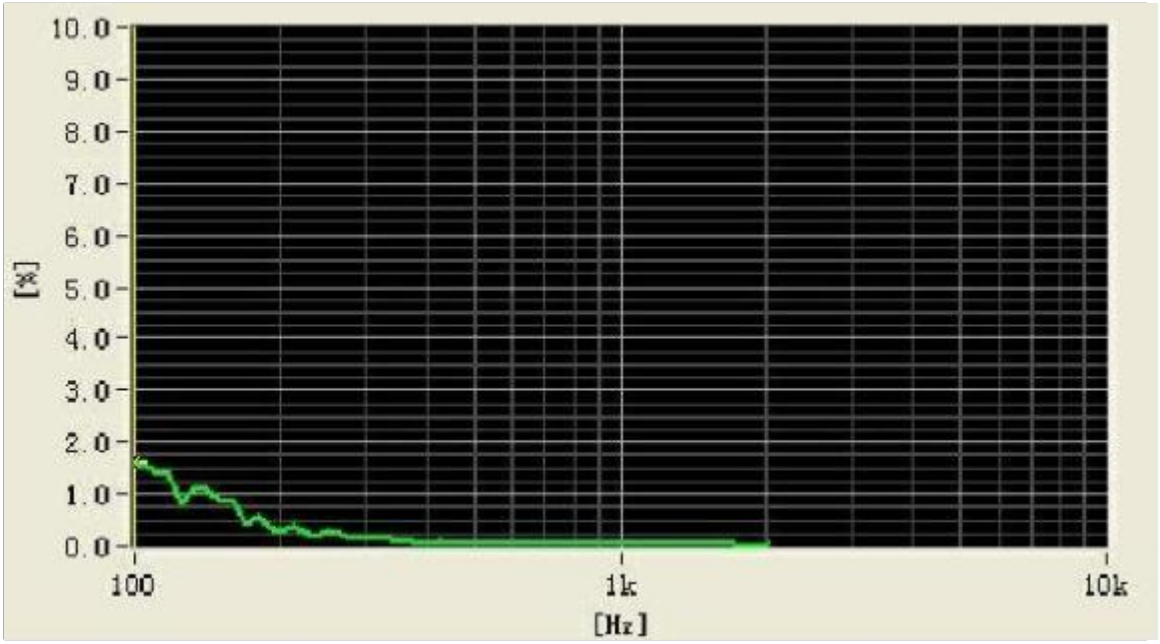

This print and information there in are proprietary to Bestar Holding Co., Ltd. and shall not be used in whole or in part without its written content

Rev.	Date	Drawn	Note		
C	2018/06/06	张翔捷	Change the wire	Date:	2018/06/06
B	2018/02/22	张翔捷	Change the test conditions	Drawn by:	张翔捷
A	2017/10/06	张翔捷		Checked by:	王 平
				Approved by:	赵 峥

BESTAR HOLDING CO.,LTD www.bestargroups.com wu@be-star.com

BMS28-12B-08H05CW152J LF

Speaker

DRG NO: BS/TES01.856C

BMS28-12B-08H05CW152J LF

2. Drawing

2.1 Dimensions

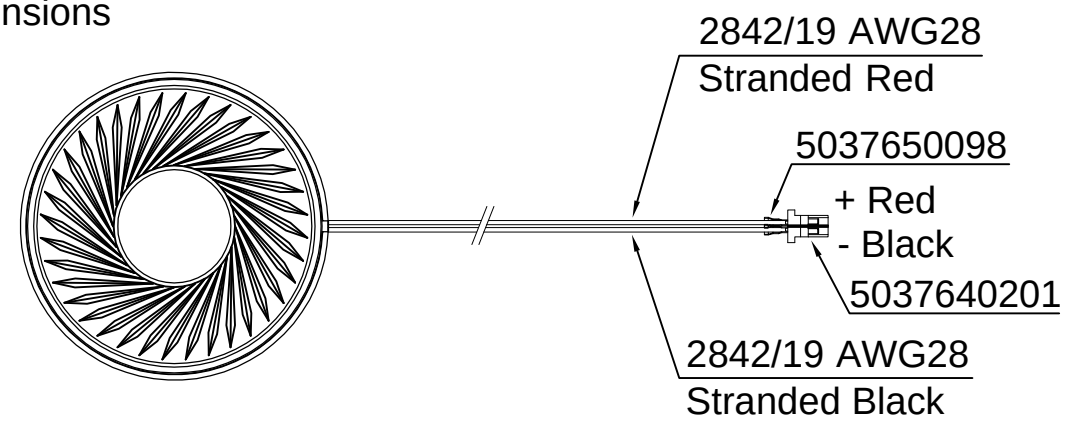

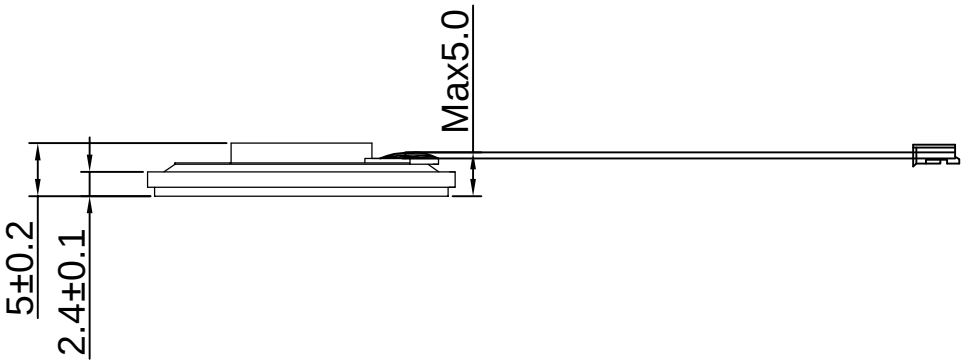

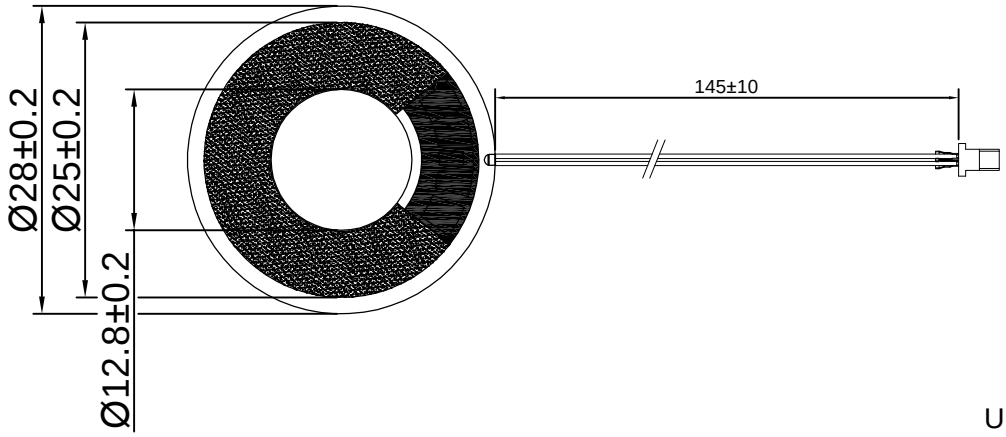

Unit:mm

This print and information there in are proprietary to Bestar Holding Co., Ltd. and shall not be used in whole or in part without its written content

Rev.	Date	Drawn	Note			
C	2018/06/06	张翔捷	Change the wire	Date:	2018/06/06	BMS28-12B-08H05CW152J LF
B	2018/02/22	张翔捷	Change the test conditions	Drawn by:	张翔捷	
A	2017/10/06	张翔捷		Checked by:	王 平	Speaker
				Approved by:	赵 峥	

BESTAR HOLDING CO.,LTD www.bestargroups.com wu@be-star.com | DRG NO: BS/TES01.856C | Page:5 of 9

BMS28-12B-08H05CW152J LF

2.2 Bill of Material

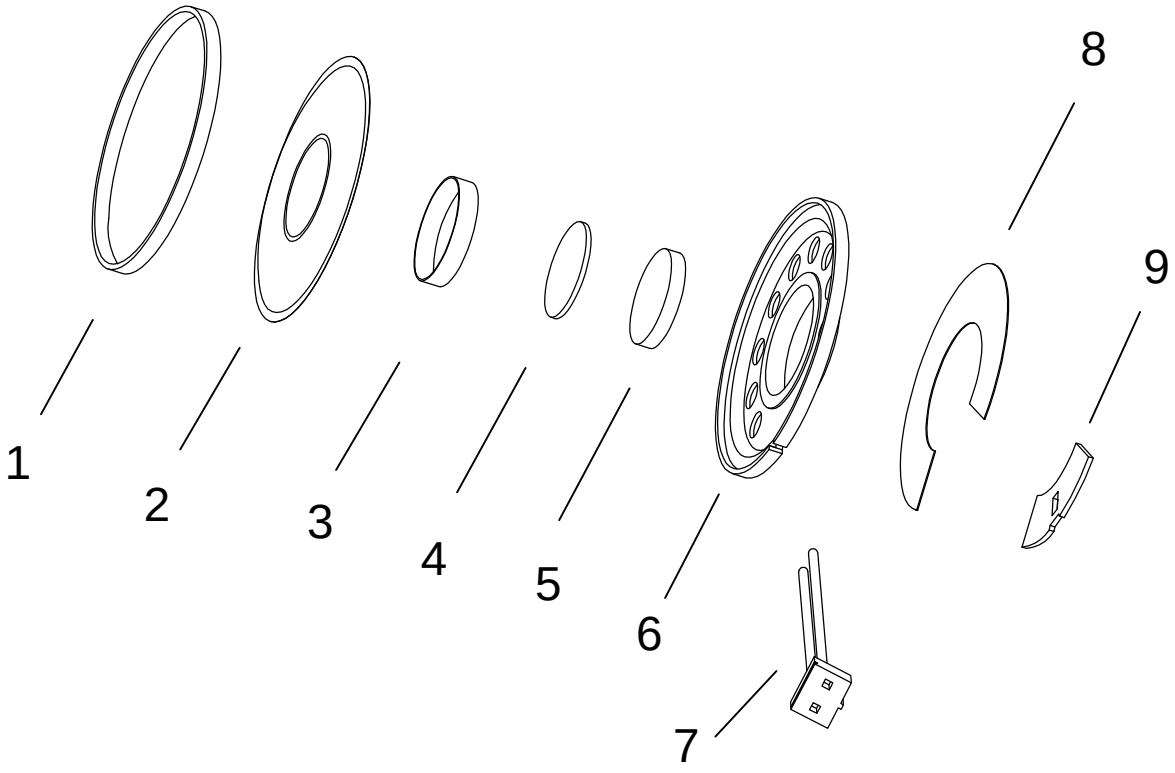

No	Parts Name	Material
9	PCB	Epoxy and Cu(plating Sn)
8	Mesh	Cloth
7	Plug wire	Cu and PVC
6	Frame	SPCC
5	Magnet	NdFeB
4	Plate	SPCC
3	Voice coil	Cu
2	Diaphragm	PEN
1	Gasket	ABS

Rev.	Date	Drawn	Note
C	2018/06/06	张翔捷	Change the wire
B	2018/02/22	张翔捷	Change the test conditions
A	2017/10/06	张翔捷	

Date:	2018/06/06
Drawn by:	张翔捷
Checked by:	王　平
Approved by:	赵　峥

BESTAR HOLDING CO.,LTD www.bestargroups.com wu@be-star.com

BMS28-12B-08H05CW152J LF

Speaker

DRG NO: BS/TES01.856C

Page:6 of 9

This print and information there in are proprietary to Bestar Holding Co., Ltd. and shall not be used in whole or in part without its written content

BMS28-12B-08H05CW152J LF

3. Reliability Test

3.1 Load Test

Power	0.8W White noise
Duration	96hrs

3.2 High Temperature Test

Temperature	+85±3℃
Duration	96hrs

3.3 Low Temperature Test

Temperature	-40±3 ℃
Duration	96hrs

3.4 Damp Heat

Temperature	40±3℃
Relative Humidity	90%-95%RH
Duration	96hrs

3.5 Temperature Cycle Test

Cycle 5

0.8W, F0~3500Hz, White noise

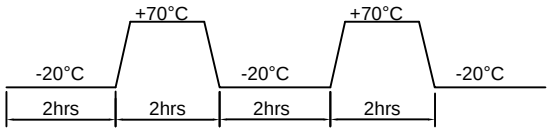

3.6 Drop Test

Height	75cm (in state of packing)
Times	10 (Drop onto hardwood board)

3.7 Vibration Test

10 ~ 55 ~ 10Hz sin-wave sweep 15min. 5G (constant) X,Y,Z 3 directions 32 hours each, total 96 hours, 0.8W, F0~3500Hz, White noise

3.8 Lead wire pull strength

3.0N for 30 sec. Horizontal, 2.0N 30 sec. vertical

Notice

1. Immediately after reliability test, the samples shall be stored under typical ambient laboratory climate conditions unless otherwise noted for 4 hours prior to performing verification testing.
2. After reliability test, all samples must meet all specified requirements
3. Sensitivity differences at F0 ~ 5.0Khz must be within +/-3 of initial values.

This print and information there in are proprietary to Bestar Holding Co., Ltd. and shall not be used in whole or in part without its written content

Rev.	Date	Drawn	Note		
C	2018/06/06	张翔捷	Change the wire	Date:	2018/06/06
B	2018/02/22	张翔捷	Change the test conditions	Drawn by:	张翔捷
A	2017/10/06	张翔捷		Checked by:	王 平
				Approved by:	赵 峥

BESTAR HOLDING CO.,LTD www.bestargroups.com wu@be-star.com

BMS28-12B-08H05CW152J LF

Speaker

DRG NO: BS/TES01.856C

BMS28-12B-08H05CW152J LF

4. Packing

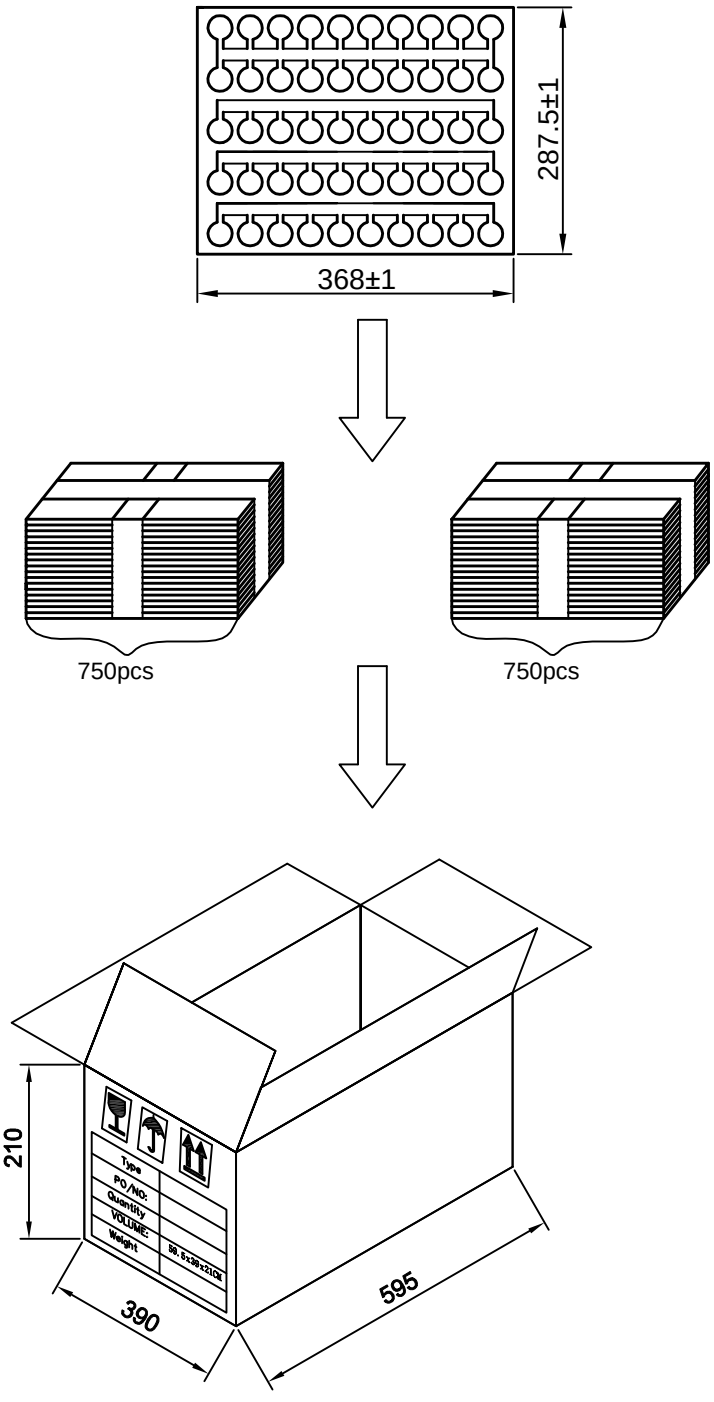

This print and information there in are proprietary to Bestar Holding Co., Ltd. and shall not be used in whole or in part without its written content

Rev.	Date	Drawn	Note			
C	2018/06/06	张翔捷	Change the wire	Date:	2018/06/06	BMS28-12B-08H05CW152J LF
B	2018/02/22	张翔捷	Change the test conditions	Drawn by:	张翔捷	
A	2017/10/06	张翔捷		Checked by:	王 平	Speaker
				Approved by:	赵 峥	

BESTAR HOLDING CO.,LTD www.bestargroups.com wu@be-star.com

DRG NO: BS/TES01.856C

BMS28-12B-08H05CW152J LF

5. History change record

version No.	Change Items		Date	Drawn	Approved
	Before	After			
A			17/10/06	张翔捷	徐金国
B	Change the test conditions		18/02/22	张翔捷	徐金国
C	Change the wire		18/06/06	张翔捷	赵　峥

This print and information there in are proprietary to Bestar Holding Co., Ltd. and shall not be used in whole or in part without its written content

Rev.	Date	Drawn	Note		
C	2018/06/06	张翔捷	Change the wire	Date:	2018/06/06
B	2018/02/22	张翔捷	Change the test conditions	Drawn by:	张翔捷
A	2017/10/06	张翔捷		Checked by:	王　平
				Approved by:	赵　峥

BESTAR HOLDING CO.,LTD www.bestargroups.com wu@be-star.com

BMS28-12B-08H05CW152J LF

Speaker

DRG NO: BS/TES01.856C