SPECIFICATION
FOR AUTOMOTIVE SPEAKER

Customer	
Customer P/N	SBM-3942L6-8N0.5P(8Ohms 0.5W)
BeStar Model Name	BMS36-11-08H06-FR3 LF
Product No.	132206
Issue No.	BS/TES01.302B
Issue Date	07/08/27

Approval:

1.Characteristics
2.Dimension
3.Reliability Test
4.Packing
5.History change record

Drawn by	Checked by	Approved by	Customer approved
莫丽丽	陶红仲	张秀琴	

For conform to the European Union Directive on the Restriction of Hazardous Substances(RoHS), this type of productions forbid use all the hazardous substances as follow:
Lead
Cadmium
Mercury
Hexavalent chromium
Polybrominated biphenyls (PBB)
Polybrominated diphenyl ethers (PBDE)

Bestar Acoustic
BESTAR ELECTRONICS INDUSTRY CO.,LTD
No.199 HuangHe West Road.New district,changzhou,
jiangsu Province,P.R.China
Tel:86-519-8222567 Fax:86-519-8222551
Http:www.be-star.com
E-mail: wu@be-star.com, info@be-star.com

BMS36-11-08H06-FR3 LF



1. Characteristic

1.1 Electrical and Mechanical Characteristics

No.	Item	Specifications
1	Rated Input	0.5W
2	Maximum Input	1W
3	Resonance Frequency(f0)	630± 20%Hz
4	Frequency Response	f0...5500Hz
5	Deviation	max. 20dB
6	Magnet	NdFeB Ø 12.5X1.5mm
7	Impedance(at 1KHz)	8ohm± 15%
8	Output SPL(at 0.5W,0.5m)	85± 3dB
9	Buzzes & Rattles	Must be normal
		at sine wave 2 V
10	Operating Temperature	-40 ...+90°C
11	Storage Temperature	-40 ...+90°C
12	Weight	9g

1.2 Typical Frequency Response Curve

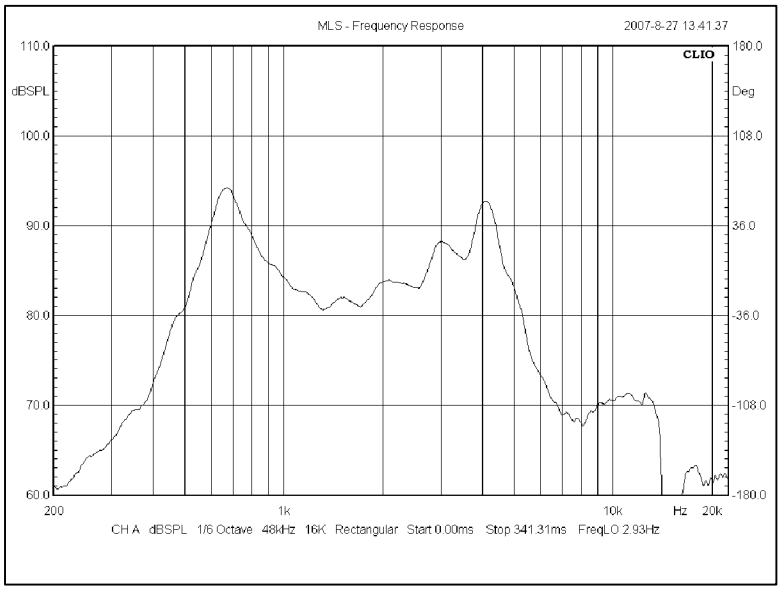

This print and information there in are proprietary to Bestar Electronics Industry Co., Ltd. and shall not be used in whole or in part without its written content

Rev.	Date	Drawn	Note		
				Date:	07/08/27
B	07/08/27	莫丽丽		Drawn by:	莫丽丽
A	04/06/16	王善梅		Checked by:	陶红仲
				Approved by:	张秀琴

BMS36-11-08H06-FR3 LF

Speaker

BESTAR ELECTRONICS INDUSTRY CO.,LTD
www.be-star.com wu@be-star.com

DRG NO: BS/TES01.302B

BMS36-11-08H06-FR3 LF

2. Dimension

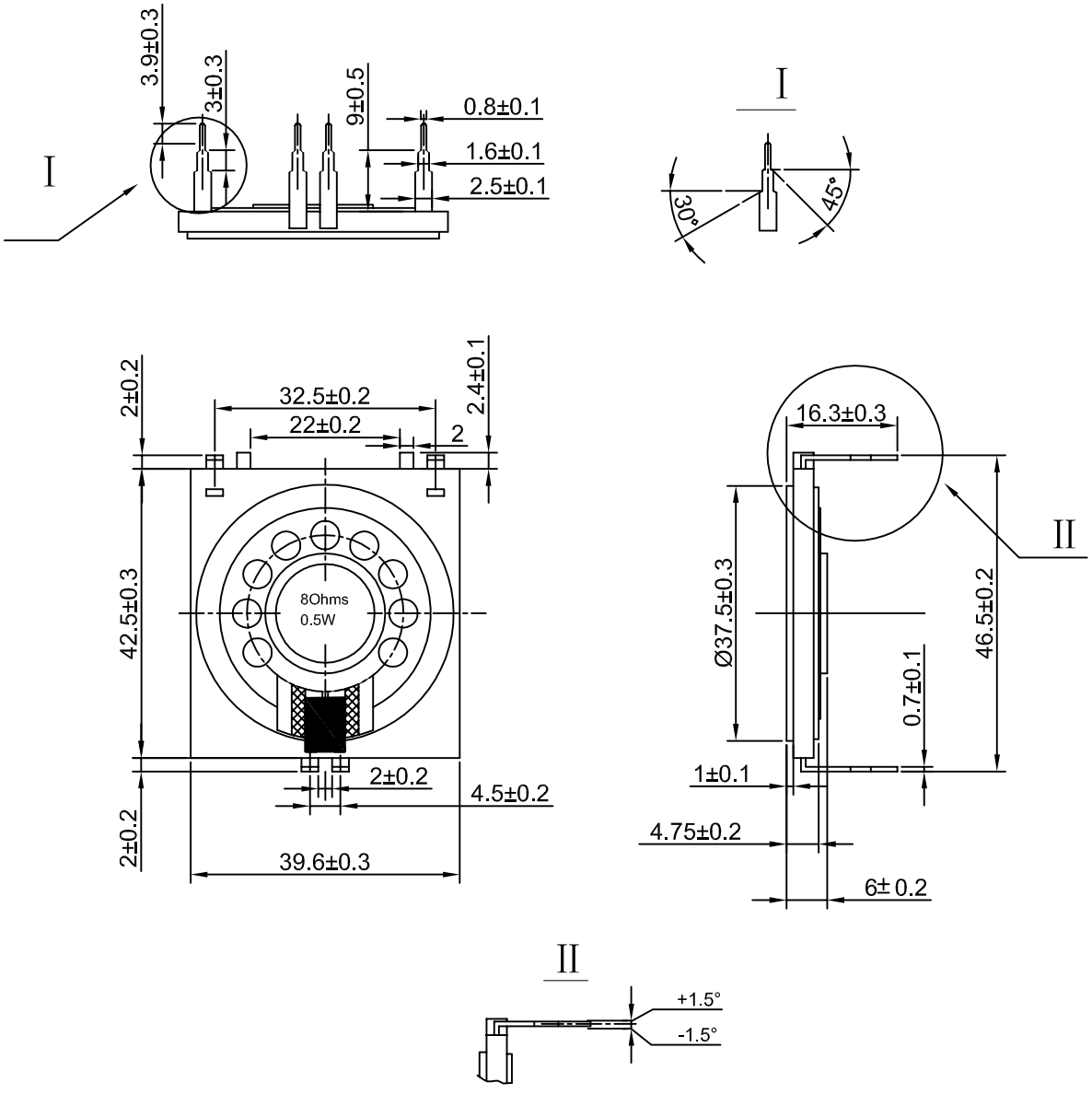

This print and information there in are proprietary to Bestar Electronics Industry Co., Ltd. and shall not be used in whole or in part without its written content

				Date:	07/08/27
B	07/08/27	莫丽丽		Drawn by:	莫丽丽
A	04/06/16	王善梅		Checked by:	陶红仲
Rev.	Date	Drawn	Note	Approved by:	张秀琴

BMS36-11-08H06-FR3 LF

Speaker

BESTAR ELECTRONICS INDUSTRY CO.,LTD

www.be-star.com wu@be-star.com

DRG NO: BS/TES01.302B

BMS36-11-08H06-FR3 LF

3. Reliability Test

3.1 Load Test

Input Power	0.25W,pink noise
Duration	96hrs

3.2 Heat Test

Temperature	+90°C±2
Duration	96hrs

3.3 Cold Test

Temperature	-40°C±2
Duration	96hrs

3.4 Moisture Test

Temperature	+40°C±2
Humidity	90%-95%RH
Duration	96hrs

3.5 Temperature shock

Low temperature	-40°C
Upper temperature	+90°C
Dwell time each temperature	30min.

Transfer time from lower to upper temperature < 10s

Number of cycles	100

3.6 Vibration Test

Vibration Frequency	10~55Hz
Amplitude	1.52mm
Duration	2hrs each of 3 axis

3.7 Drop test

Height of drop	1.2m
Ground	concrete floor
Temperature	room conditions
Number of drops	20

3.8 Wave soldering

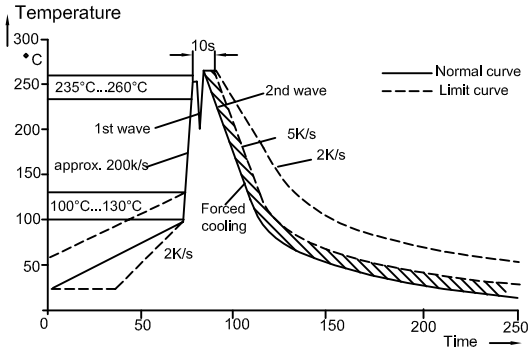

After each test, all acoustic and electronical characteristic should be satisfied with specification.

This print and information there in are proprietary to Bestar Electronics Industry Co., Ltd. and shall not be used in whole or in part without its written content

Rev.	Date	Drawn	Note		
				Date:	07/08/27
B	07/08/27	莫丽丽		Drawn by:	莫丽丽
A	04/06/16	王善梅		Checked by:	陶红仲
				Approved by:	张秀琴

BMS36-11-08H06-FR3 LF

Speaker

BMS36-11-08H06-FR3 LF

4. Packing

4.1 Packing Drawing

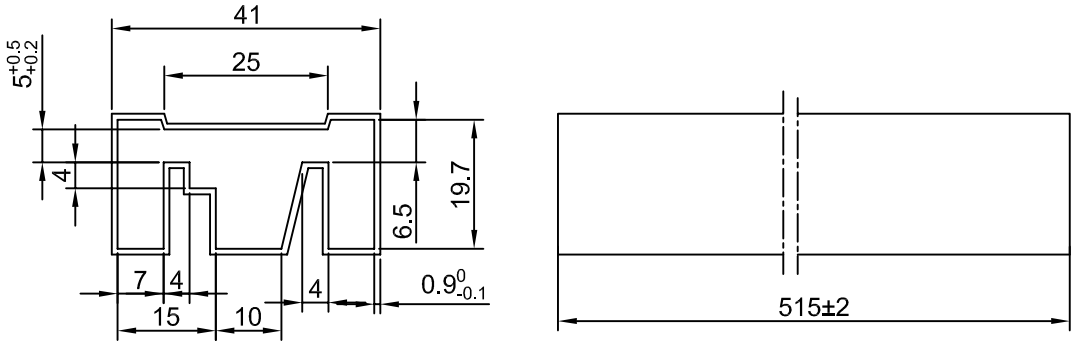

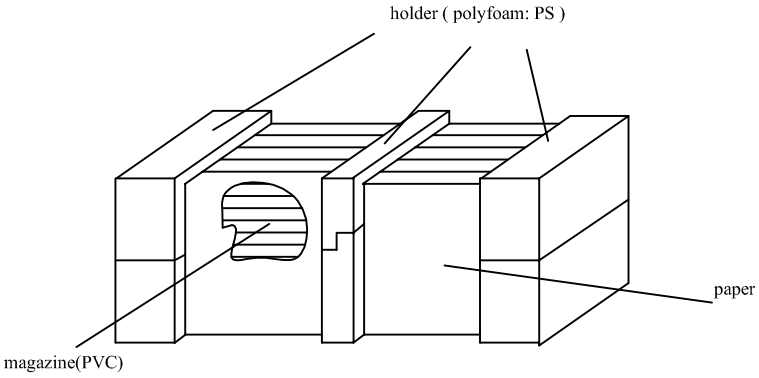

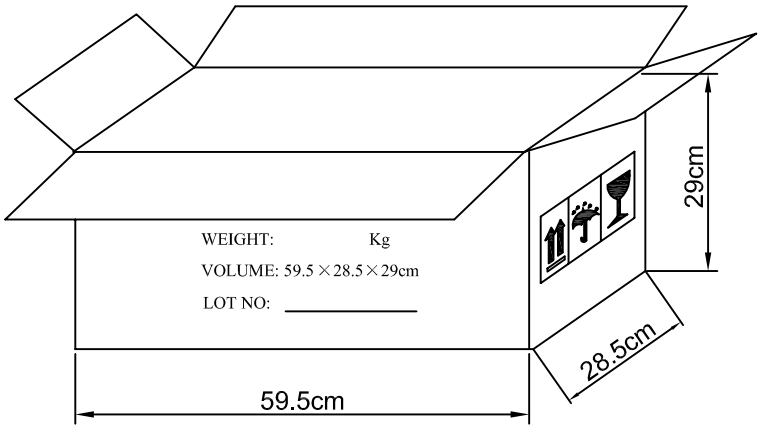

4.2 packing quantity

4.21 11 pcs/magazine
4.22 50 magazine/carton
4.23 550 pcs/carton in total
4.24 carton size 59.5X28.5X29 cm

This print and information there in are proprietary to Bestar Electronics Industry Co., Ltd. and shall not be used in whole or in part without its written content

				Date:	07/08/27	BMS36-11-08H06-FR3 LF
B	07/08/27	莫丽丽		Drawn by:	莫丽丽	
A	04/06/16	王善梅		Checked by:	陶红仲	Speaker
Rev.	Date	Drawn	Note	Approved by:	张秀琴	

BMS36-11-08H06-FR3 LF

5. History change record

version No.	Change Items		Date	Drawn	Approved
	Before	After			
A			04/06/14	王善梅	郭敏
B		RoHS	07/08/27	莫丽丽	张秀琴

This print and information there in are proprietary to Bestar Electronics Industry Co., Ltd. and shall not be used in whole or in part without its written content