SPECIFICATION
For Electro-Magnet Buzzer

Customer	
Customer P/N	
BeStar Model Name	BMT1212XH9.5LF
Product No.	020101
Issue No.	BS/TET01.012B
Issue Date	06/05/06

Approval:

1.Characteristic
2.Drawing
3.Reliability Test
4.Packing
5. History change record

Drawn by	Checked by	Approved by	Customer approved
王善梅	韩学慧	郭 敏	

For conform to the European Union Directive on the Restriction of Hazardous Substances(RoHS), this type of productions forbid use all the hazardous substances as follow:
Lead
Cadmium
Mercury
Hexavalent chromium
Polybrominated biphenyls (PBB)
Polybrominated diphenyl ethers (PBDE)

BESTAR ELECTRONICS INDUSTRY CO.,LTD
No.199 HuangHe West Road.New district,changzhou,
jiangsu Province,P.R.China
Tel:86-519-8222567 Fax:86-519-8222551
Http:www.be-star.com
E-mail: wu@be-star.com, info@be-star.com

BMT1212XH9.5LF



1. Characteristics

1.1 Electrical and Mechanical Characteristics

No.	Item	Specification
1.	Operating Voltage	8-15V
2.	Rated Voltage	12V
3.	a)Sound Output Level at 10cm	min. 85dB
4.	a)Rated Current	max. 30mA
5.	a)Resonant Frequency	2300± 300Hz
6.	b)Response Time	max50 ms
7.	Operating Temperature	-30...+80° C
8.	Storage Temperature	-30...+80° C
a)Value applying rated voltage(DC)		
b)Value applying (Min.operating DC voltage)		

1.2 Standard test Fixture

No reaction in space with in 400mm in all directions

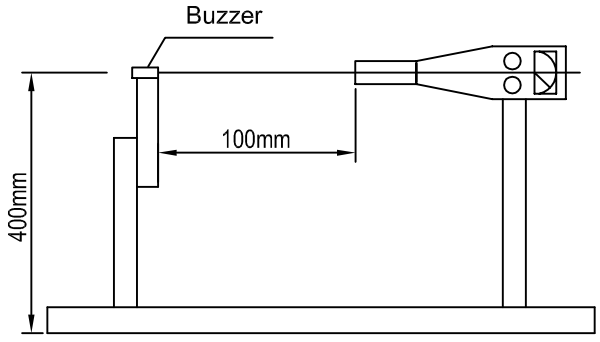

This print and information there in are proprietary to Bestar Electronics Industry Co., Ltd. and shall not be used in whole or in part without its written content

				Date:	06/05/06	BMT1212XH9.5LF
B	06/05/06	王善梅	ROHS version	Drawn by:	王善梅	
A	01/03/10	王善梅		Checked by:	韩学慧	Buzzer
Rev.	Date	Drawn	Note	Approved by:	郭 敏	

BMT1212XH9.5LF

2.Drawing

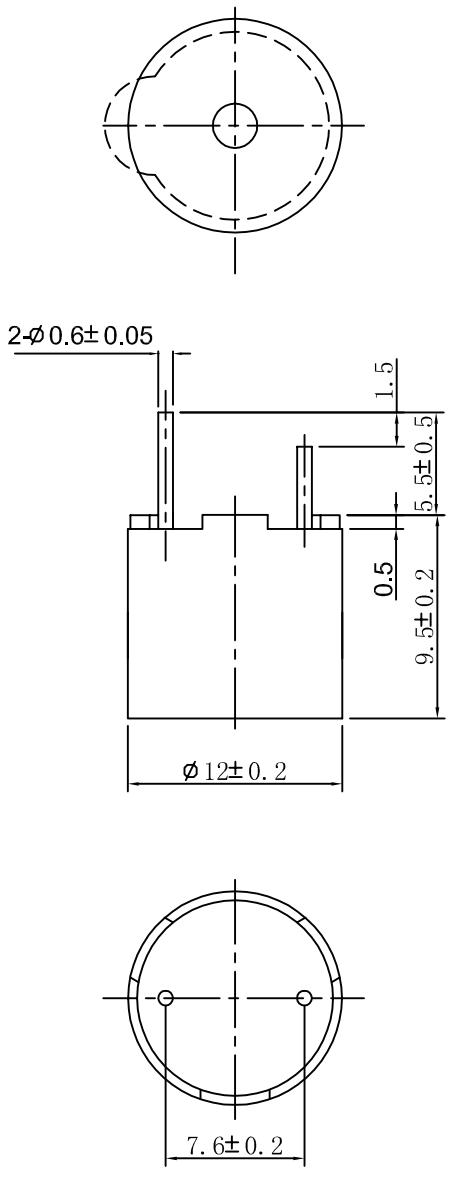

This print and information there in are proprietary to Bestar Electronics Industry Co., Ltd. and shall not be used in whole or in part without its written content

				Date:	06/05/06
B	06/05/06	王善梅	ROHS version	Drawn by:	王善梅
A	01/03/10	王善梅		Checked by:	韩学慧
Rev.	Date	Drawn	Note	Approved by:	郭 敏

BESTAR ELECTRONICS INDUSTRY CO.,LTD
www.be-star.com wu@be-star.com

BMT1212XH9.5LF

Buzzer

DRG NO: BS/TET01.012B

3. Reliability test

3.1 High temperature test
Temperature +80° C
Duration 96hrs

3.2 Low temperature test
Temperature -30° C
Duration 96hrs

3.3 Temperature cycle test
Cycles 5

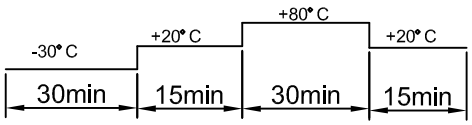

3.4 Humidity cycle test
Cycles 10

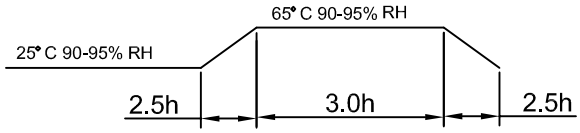

all these tests above should be measured after leaving normal temperature for 2hrs.

3.5 Load test
Power supply rated voltage
Duration 1000hrs

3.6 Vibration Test
Vibration Frequency 10~55Hz
Amplitude 1.5mm
Duration x,y&z directions 30min

3.7 Drop test
Height 70cm
(to 10mm thickness woodenboard)
Direction 3(x,y&z)

3.8 Solderability test
Temperature 255° C
Duration 3secs

Notice: specification must be satisfied in this condition ,except S.P.L(S.P.L shall be 80dB more).

This print and information there in are proprietary to Bestar Electronics Industry Co., Ltd. and shall not be used in whole or in part without its written content

BMT1212XH9.5LF

4. Packing

4.1 packing drawing

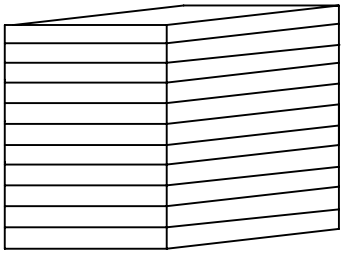

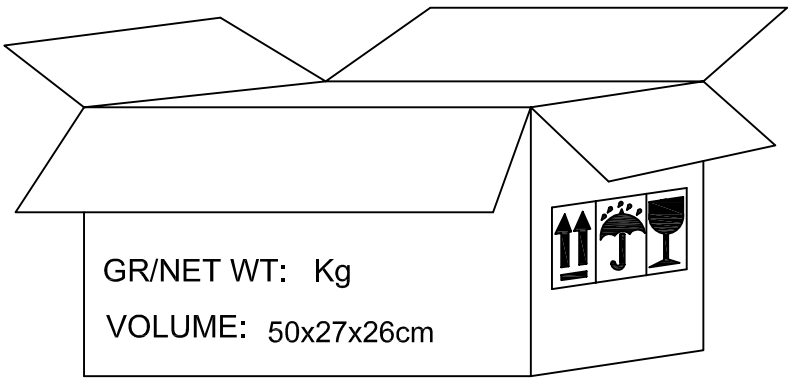

4.2 packing quantity

1)100pcs/tray
2)30tray/carton
3)3000 pcs/carton in total
4)carton size 50x27x26cm

This print and information there in are proprietary to Bestar Electronics Industry Co., Ltd. and shall not be used in whole or in part without its written content

				Date:	06/05/06	BMT1212XH9.5LF
B	06/05/06	王善梅	ROHS version	Drawn by:	王善梅	
A	01/03/10	王善梅		Checked by:	韩学慧	Buzzer
Rev.	Date	Drawn	Note	Approved by:	郭 敏	

BMT1212XH9.5LF

5. History change record

version No.	Change Items		Date	Drawn	Approved
	Before	After			
A			01/03/10	王善梅	查红红
B		RoHS	06/05/06	王善梅	郭敏

This print and information there in are proprietary to Bestar Electronics Industry Co., Ltd. and shall not be used in whole or in part without its written content

				Date:	06/05/06
B	06/05/06	王善梅	ROHS version	Drawn by:	王善梅
A	01/03/10	王善梅		Checked by:	韩学慧
Rev.	Date	Drawn	Note	Approved by:	郭 敏

BESTAR ELECTRONICS INDUSTRY CO.,LTD

www.be-star.com wu@be-star.com

BMT1212XH9.5LF

Buzzer

DRG NO: BS/TET01.012B