BeStar	SPECIFICATION FOR ELECTRO-MAGNET TRANSDUCER			
	TOTAL PAGE	07	***http://www.bestargroups.com***	RoHS

Customer		Model Name	BMT3012H15-01
Customer P/N		Product No.	018005
Date	08 Sep. 2017	Issue No.	BS/TET01.932A
Page	01 of 07	Issue Date	2017/09/08

Approval:

1.Characteristics
2.Dimension
3.Reliability Test
4.Packing
5.Notice
6.History change record

Drawn by	Checked by	Approved by	Customer approved
周吕辉	李梅芳	徐金国	

BeStar Holding Co., Ltd.
No.199 HuangHe West Road,New district,ChangZhou,JiangSu Province,P.R.China
Tel: +86 519 88222567 ***Fax:*** +86 519 88222551
E-mail: wu@be-star.com ***http://www.bestargroups.com***

BMT3012H15-01



1.Characteristics

1.1Technical terms

No.	Item	Specifications
1	Operating Voltage	8...16Vo-p
2	Rated Voltage	12Vo-p
3	a)Rated Current at 25℃	Max. 55mA
4	a)Sound Output at 10cm	≥85dB
5	b)	≥85dB
6	c)	≥85dB
7	Coil Resistance at 25℃	120±16Ω
8	Resonant Frequency	750Hz
9	Operating Temperature	-40...+85°C
10	Storage Temperature	-40...+85°C
11	Weight	10g
12	Material	Noryl SE1-GFN2J
a) Value applying rated voltage (750Hz, 50%duty,square wave)		
b) Value applying rated voltage (1500Hz, 50%duty,square wave)		
c) Value applying rated voltage (2000Hz, 50%duty,square wave)		

1.2 Test method:

1.2.1.Recommended Circuit

the following are examples of externally driven circuits.

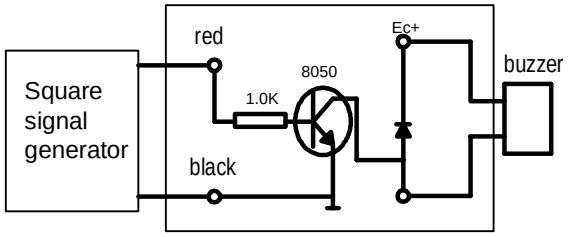

1.2.2.Standard text Fixture

No reaction in space with in 400mm in all direction

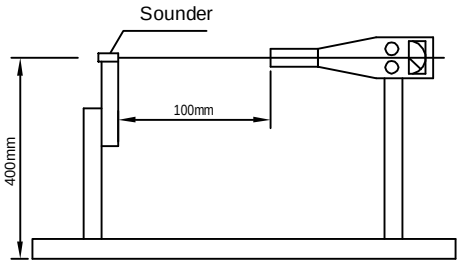

				Date:	2017/09/08
				Drawn by:	周吕辉
A	2017/09/08	周吕辉		Checked by:	李梅芳
Rev.	Date	Drawn	Note	Approved by:	徐金国

BMT3012H15-01

Transducer

BeStar Holding Co., Ltd.

www.bestargroups.com wu@be-star.com

DRG NO: BS/TET01.932A

Page:2 of 7

This print and information there in are proprietary to BeStar Holding Co., Ltd. and shall not be used in whole or in part without its written content

BMT3012H15-01

1.3Frequency response(square wave 12Vo-p 10cm)

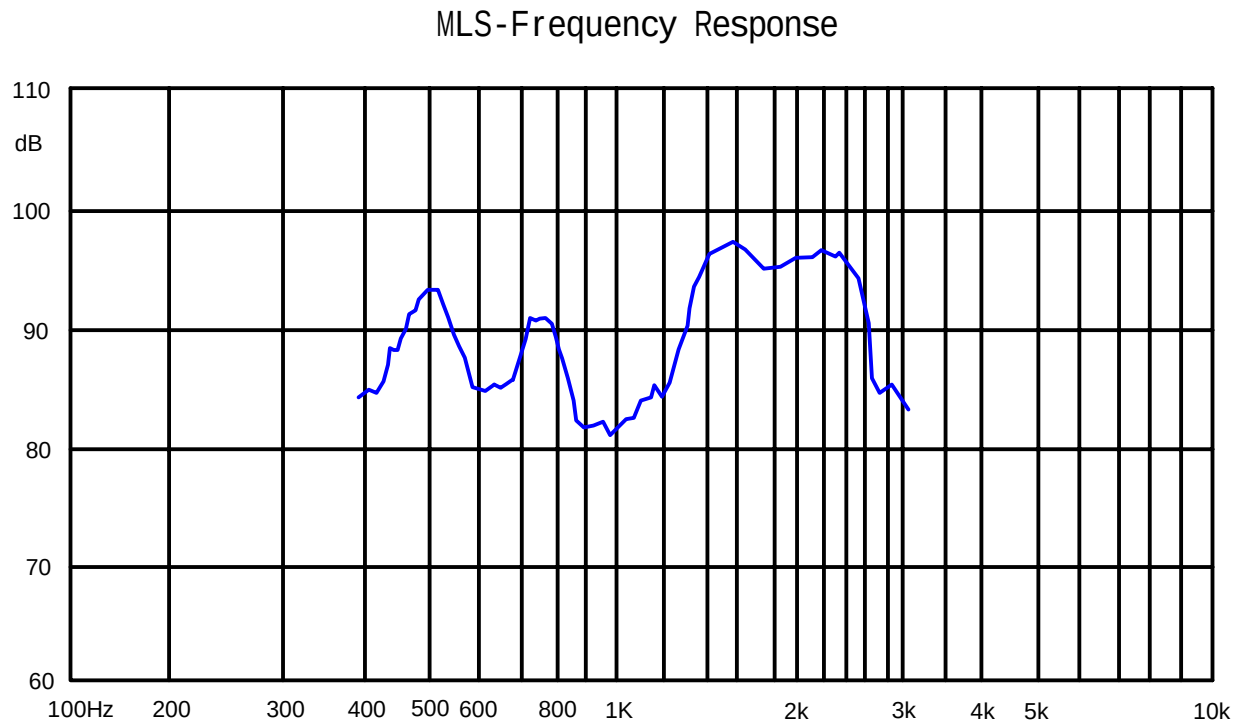

This print and information there in are proprietary to BeStar Holding Co., Ltd.
and shall not be used in whole or in part without its written content

Rev.	Date	Drawn	Note
A	2017/09/08	周吕辉	

Date:	2017/09/08
Drawn by:	周吕辉
Checked by:	李梅芳
Approved by:	徐金国

BeStar Holding Co., Ltd.

www.bestargroups.com wu@be-star.com

BMT3012H15-01

Transducer

DRG NO: BS/TET01.932A

文件号：BS/QDTE045B

BMT3012H15-01

2. Dimension

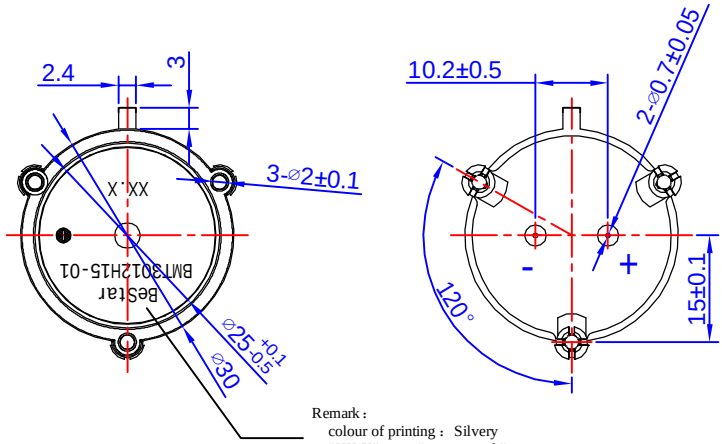

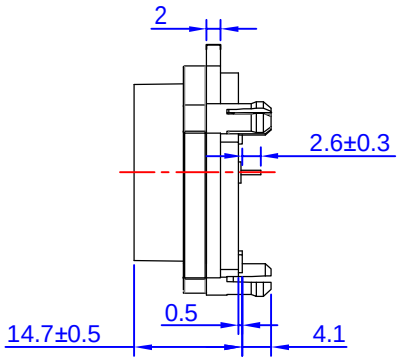

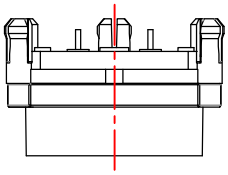

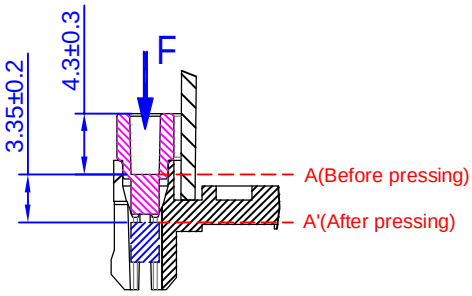

the cross-sectional view of pin

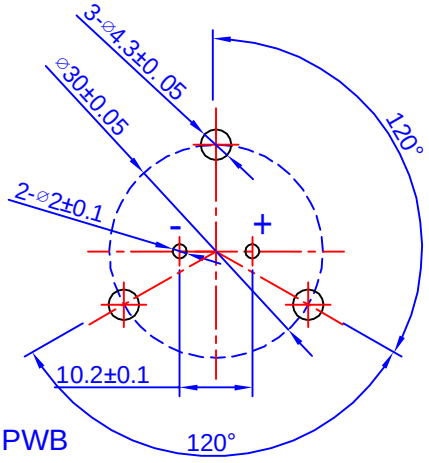

Unit: mm Tolerance:±0.3

				Date:	2017/09/08
				Drawn by:	周吕辉
A	2017/09/08	周吕辉		Checked by:	李梅芳
Rev.	Date	Drawn	Note	Approved by:	徐金国

BeStar Holding Co., Ltd. www.bestargroups.com wu@be-star.com

BMT3012H15-01

Transducer

DRG NO: BS/TET01.932A Page:4 of 7

This print and information there in are proprietary to BeStar Holding Co., Ltd. and shall not be used in whole or in part without its written content

BMT3012H15-01

3. Reliability test

3.1 high temperature test

Temperature	+85°c
Duration	96hrs

3.2 low temperature test

Temperature	-40°c
Duration	96hrs

3.3 temperature cycle test

Cycles	5

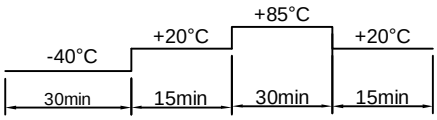

3.4 Humidity cycle test

cycles	10

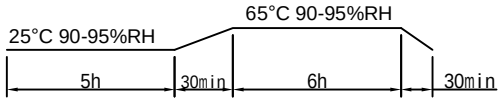

all these tests above should be measured after leaving normal temperature for 2hrs.

3.5 Life test in high temperature

Power supply	12V o-p 750Hz with duty of 50%
Temperature	+85°c
Duration	500hrs

3.6 Life test in low temperature

Power supply	12V o-p 750Hz with duty of 50%
Temperature	-40°c
Duration	500hrs

3.7 Vibration Test

Vibration Frequency	10-55Hz
Amplitude	1.5mm
Direction	x,y&z
Duration	2hrs each direction(total 6hrs)

3.8 Drop Test

Height	70cm
(to 10mm thickness woodenboard)	
Direction	3

3.9 Solderability test

Solderability temperature	2 55°C±5
Heat applying time	3sec ±0.5

all these tests above should be measured after leaving normal temperature for 2hrs.

Notice: After teh test the part shall meet specifications without any degrance and performance except S.P.L,S.P.L shall be 80dB or more

This print and information there in are proprietary to BeStar Holding Co., Ltd. and shall not be used in whole or in part without its written content

Rev.	Date	Drawn	Note		
				Date:	2017/09/08
				Drawn by:	周吕辉
A	2017/09/08	周吕辉		Checked by:	李梅芳
				Approved by:	徐金国

BeStar Holding Co., Ltd.

www.bestargroups.com wu@be-star.com

BMT3012H15-01

Transducer

DRG NO: BS/TET01.932A

文件号：BS/QDTE045B

BMT3012H15-01

4. Packing

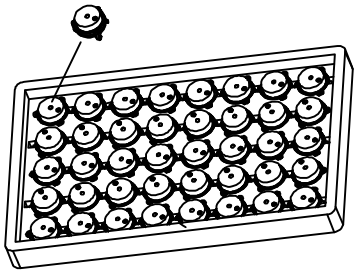

80PCS/Tray

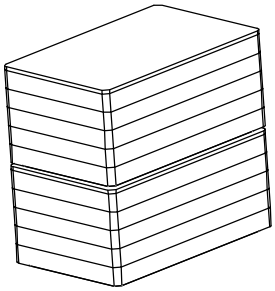

400PCS(1 bundle)

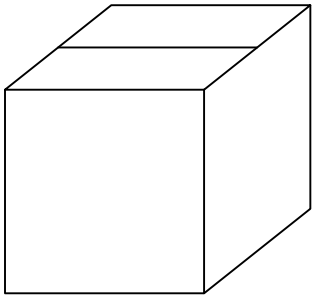

800PCS/Carton

Remarks:
(1) 80PCS/tray
(2) 20trays/carton
(3) 800PCS/carton in total
(4) carton size 42×34×31cm

5.Notice

5.1 The products mustn't be washed

5.2 **Storage Condition**

The products should be stored in the room ,where the temperature/humidity is stable. And avoid suchplaces where there are large temperature changes. Please store the products at the following conditions:

Temperature: -10 to + 40 °C Humidity: 15 to 85% R.H.

5.3 **Expire Date on Storage**

Expire date (Shelf life) of the products is six months after deliveried under the conditions of a sealed and an unopened package. Please use the products within six months after deliveried.

If you store the products for a long time (more than six months), use carefully because the products may be degraded in the solderability and/or rusty.Please confirm solderability and characteristics for the products regularly.

5.4 **Notice on Product Storage**

(1) Please do not store the products in a chemical atmosphere (Acids, Alkali, Bases, Organic gas, Sulfides and so on), because the characteristics may be reduced at quality, and/or be degraded in the solderability due to the storage in a chemical atmosphere.

(2) Please use the products immediately after the package is opened, because the characteristics may be reduced at quality, and/or be degraded in the solderability due to storage under the poor condition.

This print and information there in are proprietary to BeStar Holding Co., Ltd. and shall not be used in whole or in part without its written content

Rev.	Date	Drawn	Note		
				Date:	2017/09/08
				Drawn by:	周吕辉
A	2017/09/08	周吕辉		Checked by:	李梅芳
				Approved by:	徐金国

BeStar Holding Co., Ltd. www.bestargroups.com wu@be-star.com

BMT3012H15-01

Transducer

DRG NO: BS/TET01.932A

BMT3012H15-01

6. History change record

version No.	Change Items		Date	Drawn	Approved
	Before	After			
A			2017/09/08	周吕辉	徐金国

This print and information there in are proprietary to BeStar Holding Co., Ltd. and shall not be used in whole or in part without its written content

Rev.	Date	Drawn	Note		
				Date:	2017/09/08
				Drawn by:	周吕辉
A	2017/09/08	周吕辉		Checked by:	李梅芳
				Approved by:	徐金国

BeStar Holding Co., Ltd.

www.bestargroups.com wu@be-star.com

BMT3012H15-01

Transducer

DRG NO: BS/TET01.932A