SPECIFICATION
FOR PIEZO ELECTRIC BUZZER

Customer	
Customer P/N	
BeStar Model Name	BPT2412XH9.5-06 LF
Product No.	040708
Issue No.	BS/TEP01.421A
Issue Date	06/05/07

Approval:

1.Characteristics
2.Dimension
3.Reliability Test
4.Packing
5.Notice
6.History change record

Drawn by	Checked by	Approved by	Customer approved

For conform to the European Union Directive on the Restriction of Hazardous Substances(RoHS), this type of productions forbid use all the hazardous substances as follow:
Lead
Cadmium
Mercury
Hexavalent chromium
Polybrominated biphenyls (PBB)
Polybrominated diphenyl ethers (PBDE)

Bestar Acoustic
BESTAR ELECTRONICS INDUSTRY CO.,LTD
No.199 HuangHe West Road.New district,changzhou,
jiangsu Province,P.R.China
Tel:86-519-8222567 Fax:86-519-8222551
Http:www.be-star.com
E-mail: wu@be-star.com, info@be-star.com

BPT2412XH9.5-06 LF



1. Characteristics

1.1 Electrical and Mechanical Characteristics

No.	Item	Specification
1.	Rated Voltage	12 VDC
2.	Operating Voltage	3...20VDC
3.	a)Rated Current	max.13mA
4.	a)Sound Output at 10cm	Min.85dB(continuous)
5.	Resonant Frequency	3.3± 0.5 KHz
6.	Operating Temperature	-30...+85° C
7.	Storage Temperature	-40...+95° C
8.	Weight	3g ±25%
a)Value applying at rated voltage.(DC)		

1.2.Standard test Fixture

No reaction in space with in 400mm in all direction

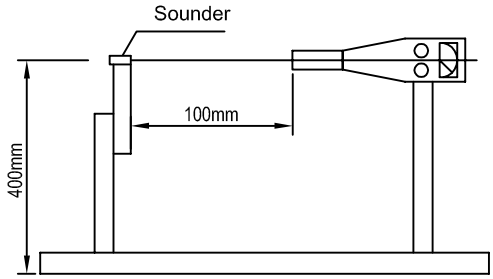

This print and information there in are proprietary to Bestar Electronics Industry Co., Ltd. and shall not be used in whole or in part without its written content

				Date:	06/05/07	BPT2412XH9.5-06 LF
				Drawn by:	杨红烨	
A	06/05/07	杨红烨		Checked by:	王善梅	Piezo Buzzer
Rev.	Date	Drawn	Note	Approved by:	郭 敏	
BESTAR ELECTRONICS INDUSTRY CO.,LTD www.be-star.com wu@be-star.com					DRG NO: BS/TEP01.421A	Page:1 of 5

BPT2412XH9.5-06 LF

2. Dimension

Tolerance:± 0.5 Unit:mm

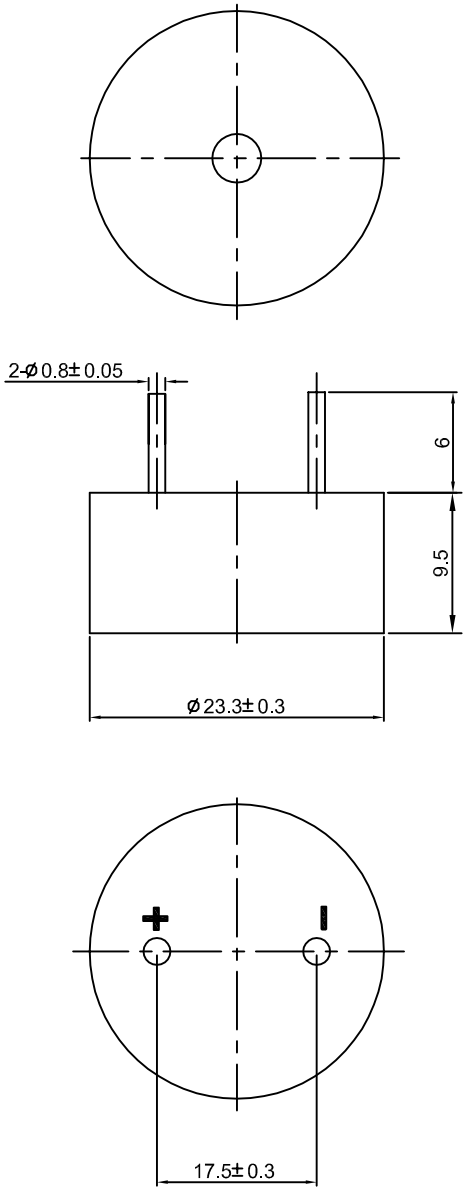

This print and information there in are proprietary to Bestar Electronics Industry Co., Ltd. and shall not be used in whole or in part without its written content

				Date:	06/05/07
				Drawn by:	杨红烨
A	06/05/07	杨红烨		Checked by:	王善梅
REV.	Date	Drawn	Note	Approved by:	郭 敏

BPT2412XH9.5-06 LF

Piezo Buzzer

BESTAR ELECTRONICS INDUSTRY CO.,LTD
www.be-star.com wu@be-star.com

DRG NO: BS/TEP01.421A

BPT2412XH9.5-06 LF

3. Reliability test

3.1 High temperature test
- Temperature: +95° C
- Duration: 96hrs

3.2 Low temperature test
- Temperature: -40° C
- Duration: 96hrs

3.3 Life test in normal temperature
- Power supply: rated voltage
- Duration: 1000hrs

3.4 Temperature cycle test

Cycles: 5

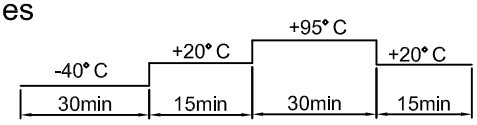

3.5 Humidity cycle test

Cycles: 5

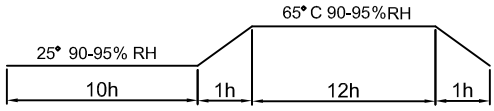

all these tests above should be measured after leaving normal temperature for 2hrs.

3.3 Solderability
- Temperature: 255± 5° C
- Duration: 3± 0.5sec

3.7 Drop test
- Height: 70cm
- (to 10mm thickness woodenboard)
- Direction: 3

Notice: All specification must be satisfied in this condition.

This print and information there in are proprietary to Bestar Electronics Industry Co., Ltd. and shall not be used in whole or in part without its written content

				Date:	06/05/07	BPT2412XH9.5-06 LF
				Drawn by:	杨红烨	
A	06/05/07	杨红烨		Checked by:	王善梅	Piezo Buzzer
REV.	Date	Drawn	Note	Approved by:	郭 敏	
BESTAR ELECTRONICS INDUSTRY CO.,LTD www.be-star.com wu@be-star.com					DRG NO: BS/TEP01.421A	Page:3 of 5

BPT2412XH9.5-06 LF

4.Packing

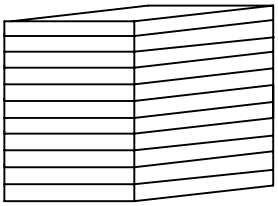

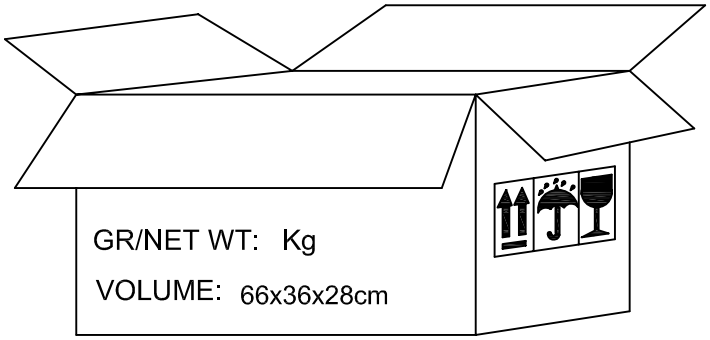

packing quantity

1)50pcs/tray
2)40tray/carton
3)2000 pcs/carton in total
4)carton size 66x36x28cm

5.Notice

5.1 The products mustn't be washed

5.2 **Storage Condition**

The products should be stored in the room ,where the temperature/humidity is stable. And avoid such places where there are large temperature changes. Please store the products at the following conditions:

Temperature: -10 to + 40°C Humidity: 15 to 85% R.H.

5.3 **Expire Date on Storage**

Expire date (Shelf life) of the products is six months after deliveried under the conditions of a sealed and an unopened package. Please use the products within six months after deliveried. If you store the products for a long time (more than six months), use carefully because the products may be degraded in the solderability and/or rusty.Please confirm solderability and characteristics for the products regularly.

5.4 **Notice on Product Storage**

(1) Please do not store the products in a chemical atmosphere (Acids, Alkali, Bases, Organic gas, Sulfides and so on), because the characteristics may be reduced at quality, and/or be degraded in the solderability due to the storage in a chemical atmosphere.

(2) Please use the products immediately after the package is opened, because the characteristics may be reduced at quality, and/or be degraded in the solderability due to storage under the poor condition.

(3) Please do not drop the products to avoid cracking of ceramic element.

This print and information there in are proprietary to Bestar Electronics Industry Co., Ltd. and shall not be used in whole or in part without its written content

				Date:	06/05/07	BPT2412XH9.5-06 LF
				Drawn by:	杨红烨	
A	A	06/05/07	杨红烨	Checked by:	王善梅	Piezo Buzzer
	REV.	Date	Drawn	Note	Approved by:	郭 敏
BESTAR ELECTRONICS INDUSTRY CO.,LTD www.be-star.com wu@be-star.com					DRG NO: BS/TEP01.421A	Page:4 of 5

BPT2412XH9.5-06 LF

6. History change record

version No.	Change Items		Date	Drawn	Approved
	Before	After			
A			06/05/07	杨红烨	郭敏

This print and information there in are proprietary to Bestar Electronics Industry Co., Ltd. and shall not be used in whole or in part without its written content