SPECIFICATION
FOR PIEZO ELECTRIC BUZZER

Customer	
Customer P/N	
BeStar Model Name	BPT2412XH9.5 LF
Product No.	040703
Issue No.	BS/TEP01.251B
Issue Date	06/12/18

Approval:

1.Characteristics
2.Dimension
3.Reliability Test
4.Packing
5.Notice
6.History change record

Drawn by	Checked by	Approved by	Customer approved
杨红烨	高正	程久生	

For conform to the European Union Directive on the Restriction of Hazardous Substances(RoHS), this type of productions forbid use all the hazardous substances as follow:
Lead
Cadmium
Mercury
Hexavalent chromium
Polybrominated biphenyls (PBB)
Polybrominated diphenyl ethers (PBDE)

Bestar Acoustic
BESTAR ELECTRONICS INDUSTRY CO.,LTD
No.199 HuangHe West Road.New district,changzhou,
jiangsu Province,P.R.China
Tel:86-519-8222567 Fax:86-519-8222551
Http:www.be-star.com
E-mail: wu@be-star.com, info@be-star.com

BPT2412XH9.5 LF



1. Characteristics

1.1 Electrical and Mechanical Characteristics

No.	Item	Specification
1.	Rated Voltage	12 VDC
2.	Operating Voltage	3...15VDC
3.	a)Rated Current	max.15mA
4.	a)Sound Output at 10cm	Min.90dB
5.	Resonant Frequency	3.3 ± 0.5KHz
6.	Operating Temperature	-20...+70° C
7.	Storage Temperature	-30...+80° C
8.	Weight	3g ± 25%
a)Value applying at rated voltage.(VDC)		

2. Dimension

Tolerance:± 0.5 Unit:mm

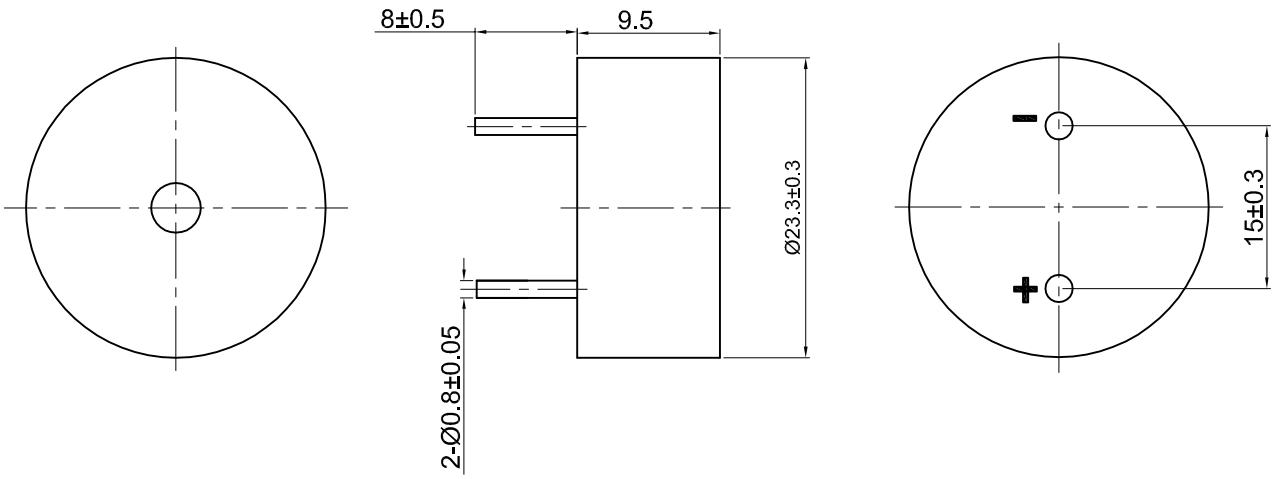

This print and information there in are proprietary to Bestar Electronics Industry Co., Ltd. and shall not be used in whole or in part without its written content

				Date:	06/12/18	BPT2412XH9.5 LF
				Drawn by:	杨红烨	
B	06/12/18	杨红烨		Checked by:	高 正	Piezo Buzzer
Rev.	Date	Drawn	Note	Approved by:	程久生	
BESTAR ELECTRONICS INDUSTRY CO.,LTD www.be-star.com wu@be-star.com						DRG NO: BS/TEP01.251B Page:1 of 4

BPT2412XH9.5 LF

3. Reliability test

3.1 high temperature test

Temperature	+80° C
Duration	96hrs

3.2 low temperature test

Temperature	-30° C
Duration	96hrs

3.3 life test in normal temperature

Power supply	rated voltage
Duration	1000hrs

3.4 temperature cycle test

Cycles 5

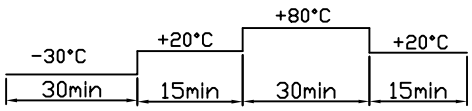

3.5 Humidity cycle test

Cycles 5

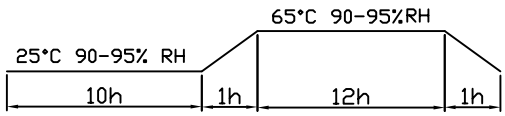

all these tests above should be measured after leaving normal temperature for 2hrs.

3.6 Drop test

Height	70cm
(to 10mm thickness woodenboard)	
Direction	3

3.7 Vibration Test

Vibration Frequency	10~55Hz
Amplitude	1.5mm
Duration x,y&z directions	30min

3.8 Solderability

Temperature	255± 5° C
Duration	3± 0.5sec

3.9 Solkder Heat Resistance

Temperature	255± 10° C
Duration	30sec

Notice: All specification must be satisfied in this condition.

This print and information there in are proprietary to Bestar Electronics Industry Co., Ltd. and shall not be used in whole or in part without its written content

				Date:	06/12/18	BPT2412XH9.5 LF
				Drawn by:	杨红烨	
B	06/12/18	杨红烨		Checked by:	高 正	Piezo Buzzer
REV.	Date	Drawn	Note	Approved by:	程久生	

BPT2412XH9.5 LF

4.Packing

packing quantity

1)50pcs/tray
2)40tray/carton
3)2000 pcs/carton in total
4)carton size: 66x36x28cm

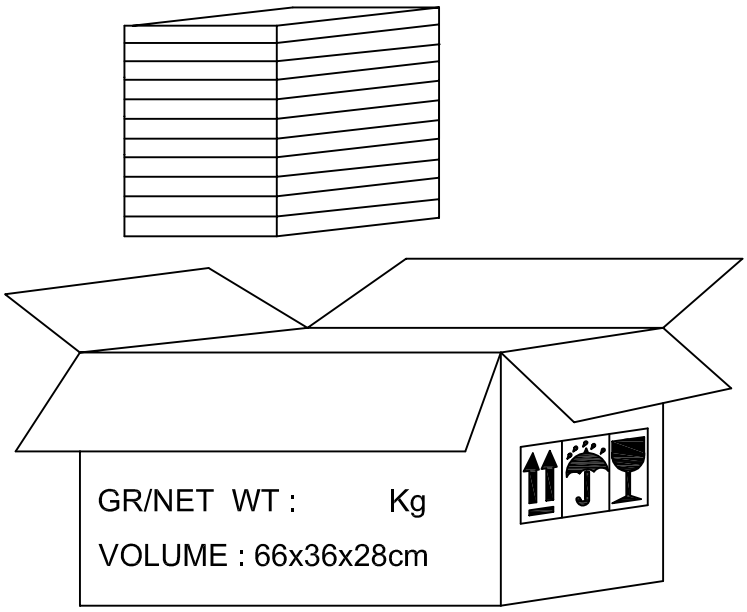

5.Notice

5.1 The products mustn't be washed

5.2 **Storage Condition**

The products should be stored in the room ,where the temperature/humidity is stable. And avoid such places where there are large temperature changes. Please store the products at the following conditions:

Temperature: -10 to + 40°C Humidity: 15 to 85% R.H.

5.3 **Expire Date on Storage**

Expire date (Shelf life) of the products is six months after deliveried under the conditions of a sealed and an unopened package. Please use the products within six months after deliveried. If you store the products for a long time (more than six months), use carefully because the products may be degraded in the solderability and/or rusty.Please confirm solderability and characteristics for the products regularly.

5.4 **Notice on Product Storage**

(1) Please do not store the products in a chemical atmosphere (Acids, Alkali, Bases, Organic gas, Sulfides and so on), because the characteristics may be reduced at quality, and/or be degraded in the solderability due to the storage in a chemical atmosphere.

(2) Please use the products immediately after the package is opened, because the characteristics may be reduced at quality, and/or be degraded in the solderability due to storage under the poor condition.

(3) Please do not drop the products to avoid cracking of ceramic element.

This print and information there in are proprietary to Bestar Electronics Industry Co., Ltd. and shall not be used in whole or in part without its written content

				Date:	06/12/18
				Drawn by:	杨红烨
B	06/12/18	杨红烨		Checked by:	高 正
REV.	Date	Drawn	Note	Approved by:	程久生

BESTAR ELECTRONICS INDUSTRY CO.,LTD
www.be-star.com wu@be-star.com

BPT2412XH9.5 LF

Piezo Buzzer

DRG NO: BS/TEP01.251B

BPT2412XH9.5 LF

6. History change record

version No.	Change Items		Date	Drawn	Approved
	Before	After			
A			03/12/23	王善梅	郭敏
B		RoHS	06/12/18	杨红烨	程久生

This print and information there in are proprietary to Bestar Electronics Industry Co., Ltd. and shall not be used in whole or in part without its written content