SPECIFICATION
FOR PIEZO ELECTRIC BUZZER

TOTAL PAGE	06	www.bestargroups.com	RoHS

Customer		Model Name	BPT2812XH25W160 LF
Customer P/N		Product No.	041405
Date	18 Apr.13	Issue No.	BS/TEP01.882A
Page	01 of 06	Issue Date	13/04/18

Approval：

1.Description
2.Drawing
3.Reliability test
4.Packing(Initial)
5.Notice
6.History Change Record

Drawn by	Checked by	Approved by	Customer approved

BESTAR ACOUSTICS CO.,LTD
No.199 HuangHe West Road.New district,ChangZhou,JiangSu Province,P.R.China
Tel: +86 519 88222567 ***Fax:*** +86 519 88222551
E-mail:wu@be-star.com ***http://***www.bestargroups.com

BPT2812XH25W160 LF

1.Description

1.1 The specification relates to the piezoelectric sounder intended to be used in alarm sysytems. Please contact us before using any of the products in the applications not described above.

1.2 Electrical and Mechanical Characteristics

No.	Item	Specification
1.	Rated Voltage	12 VDC
2.	Operating Voltage	3...24VDC
3.	a)Rated Current	max.15mA
5.	a)Sound Output at 30cm	Min.95dB
6.	Resonant Frequency	3.5± 0.5 KHz
7.	Operating Temperature	-20..+70° C
8.	Storage Temperature	-30...+80° C
9.	Weight	8.0g ± 25%
10.	Housing Material	ABS(Black)
a)Value applying at rated voltage(DC).		

1.3 Test method:

Standard text Fixture

No reaction in space with in 400mm in all direction

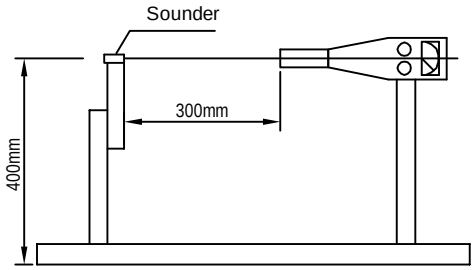

This print and information there in are proprietary to Bestar ACOUSTICS Co., Ltd. and shall not be used in whole or in part without its written content

Rev.	Date	Drawn	Note			
				Date:	13/04/18	BPT2812XH25W160 LF
				Drawn by:	陆 成	
				Checked by:	赵 峥	Piezo Buzzer
				Approved by:	王 平	
BESTAR ACOUSTICS CO.,LTD www.bestarrgroups.com wu@be-star.com					DRG NO: BS/TEP01.882A	Page:2 of 6

BPT2812XH25W160 LF

2. Drawing

Tolerance:± 0.5 Unit:mm

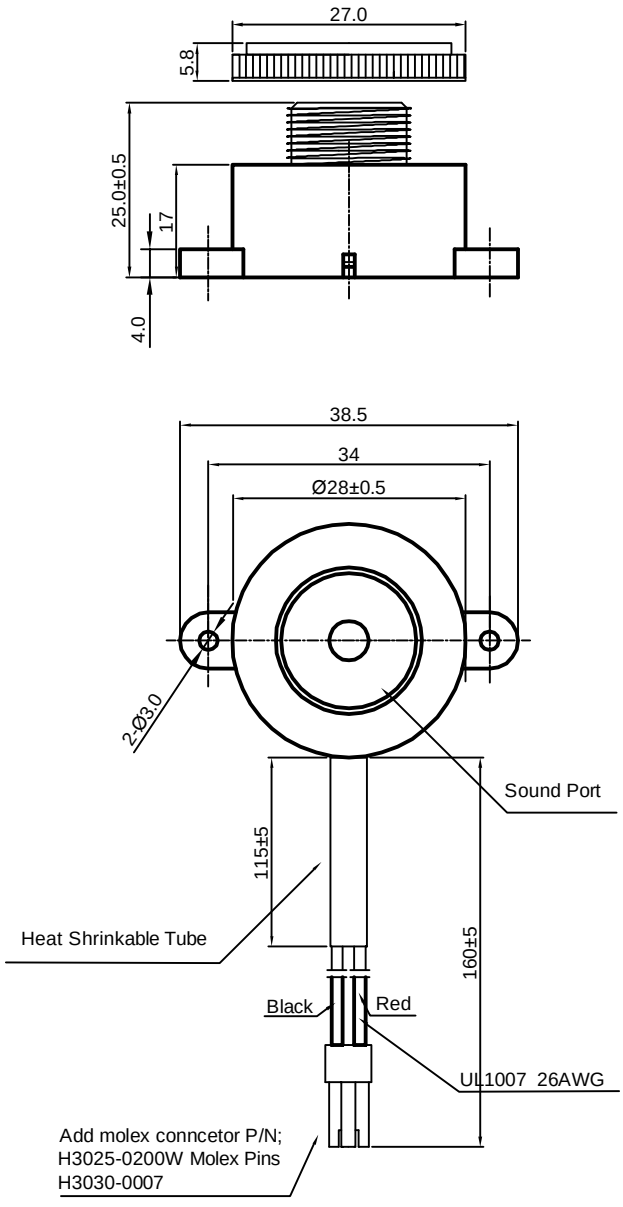

This print and information there in are proprietary to Bestar ACOUSTICS Co., Ltd. and shall not be used in whole or in part without its written content

				Date:	13/04/18	BPT2812XH25W160 LF
				Drawn by:	陆 成	
				Checked by:	赵 峥	Piezo Buzzer
REV.	Date	Drawn	Note	Approved by:	王 平	
BESTAR ACOUSTICS CO.,LTD www.bestarrgroups.com wu@be-star.com					DRG NO: BS/TEP01.882A	Page:3 of 6

BPT2812XH25W160 LF

3. Reliability test

3.1 high temperature test
Temperature +70℃

Duration 96hrs

3.2 low temperature test
Temperature -20℃
Duration 96hrs

3.3 Life test in normal temperature
Power supply rated voltage
Duration 1000hrs

3.4 Temperature cycle test

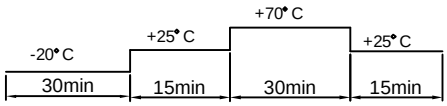

Cycles 5

3.5 Humidity test
Temperature +40° C
Relative Humidity 93%
Duration 96hrs

all these tests above should be measured after leaving normal temperature for 2hrs.

3.6 Life test in high temperature
Temperature +70°C
Duration 500hrs
Load 5VDC

3.7 Life test in low temperature
Temperature -20°C
Duration 500hrs
Load 5VDC

3.8 Drop test
Height 75cm
(to 10mm thickness woodenboard)
Direction 3

3.9 Solderability
Temperature 255± 5° C
Duration 3±0.5sec

Notice: All specification must be satisfied in this condition.
SPL: allowable deviation ±10dB of the initial value after testing

This print and information there in are proprietary to Bestar ACOUSTICS Co., Ltd. and shall not be used in whole or in part without its written content

				Date:	13/04/18	BPT2812XH25W160 LF
				Drawn by:	陆 成	
				Checked by:	赵 峥	Piezo Buzzer
REV.	Date	Drawn	Note	Approved by:	王 平	
BESTAR ACOUSTICS CO.,LTD www.bestarrgroups.com wu@be-star.com						DRG NO: BS/TEP01.882A / Page:4 of 6

文件号：BS/QDTE045B

BPT2812XH25W160 LF

4.Packing(Initial)

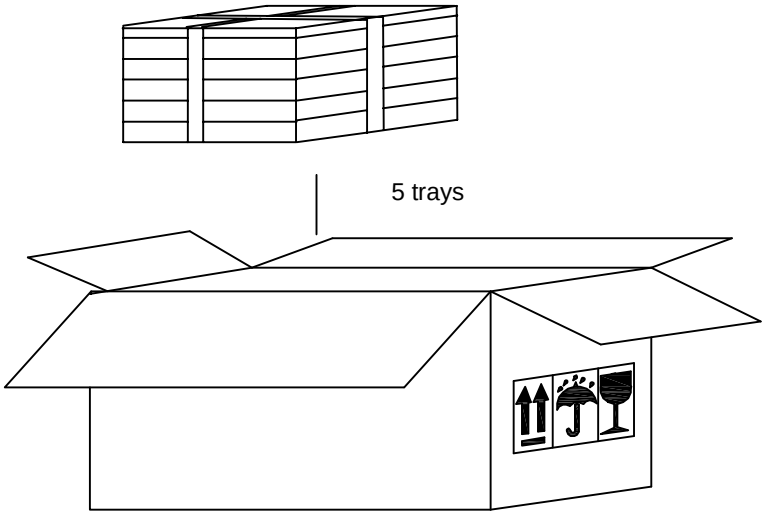

packing quantity
25pcs/tray
10trays/carton
250 pcs/carton in total
carton size 58x32x32cm

5.Notice

5.1 The products mustn't be washed
5.2 **Storage Condition**
The products should be stored in the room ,where the temperature/humidity is stable. And avoid such places where there are large temperature changes. Please store the products at the following conditions:
Temperature: -10 to + 40°C Humidity: 15 to 85% R.H.
5.3 **Expire Date on Storage**
Expire date (Shelf life) of the products is six months after deliveried under the conditions of a sealed and an unopened package. Please use the products within six months after deliveried. If you store the products for a long time (more than six months), use carefully because the products may be degraded in the solderability and/or rusty.Please confirm solderability and characteristics for the products regularly.
5.4 **Notice on Product Storage**
(1) Please do not store the products in a chemical atmosphere (Acids, Alkali, Bases, Organic gas, Sulfides and so on), because the characteristics may be reduced at quality, and/or be degraded in the solderability due to the storage in a chemical atmosphere.
(2) Please use the products immediately after the package is opened, because the characteristics may be reduced at quality, and/or be degraded in the solderability due to storage under the poor condition.
(3) Please do not drop the products to avoid cracking of ceramic element.

This print and information there in are proprietary to Bestar ACOUSTICS Co., Ltd. and shall not be used in whole or in part without its written content

				Date:	13/04/18	BPT2812XH25W160 LF
				Drawn by:	陆 成	
				Checked by:	赵 峥	Piezo Buzzer
REV.	Date	Drawn	Note	Approved by:	王 平	
BESTAR ACOUSTICS CO.,LTD www.bestarrgroups.com wu@be-star.com						DRG NO: BS/TEP01.882A / Page:5 of 6

BPT2812XH25W160 LF

6. History change record

version No.	Change Items		Date	Drawn	Approved
	Before	After			
A			13/04/18	陆 成	王 平

This print and information there in are proprietary to Bestar ACOUSTICS Co., Ltd. and shall not be used in whole or in part without its written content

REV.	Date	Drawn	Note		
				Date:	13/04/18
				Drawn by:	陆 成
				Checked by:	赵 峥
				Approved by:	王 平

BESTAR ACOUSTICS CO.,LTD

www.bestarrgroups.com wu@be-star.com

BPT2812XH25W160 LF

Piezo Buzzer

DRG NO: BS/TEP01.882A

文件号：BS/QDTE045B