BeStar	SPECIFICATION FOR ALARM			
	TOTAL PAGE	06	www.bestargroups.com	RoHS

Customer		Model Name	BUS97P12VIP67B
Customer P/N		Product No.	111924
Date	20 Nev.2013	Issue No.	BS/TEA01.359C
Page	01 of 06	Issue Date	2017/12/19

Approval：

1. Characteristics
2. Test Method
3. Drawing
4. Reliability Test
5. Packing
6. History change record

Drawn by	Checked by	Approved by	Customer approved
龚 云	宣泽	程久生	

BESTAR HOLDING CO.,LTD

No.199 HuangHe West Road,New district,ChangZhou,JiangSu Province,P.R.China

Tel: +86 519 88222567 ***Fax:*** +86 519 88222551

E-mail:wu@be-star.com ***http://www.bestargroups.com***

BUS97P12VIP67B

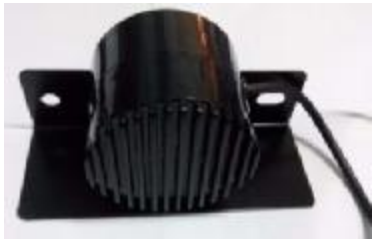

1. Characteristics

1.1 Electrical and Mechanical Characteristics

No.	Type	Specifications
1.	Rated Voltage(DC)	12V
2.	Operating Voltage(DC)	9-32V
3.	Current Consumption	max.250mA
4.	Resonant Frequency	960Hz-1440Hz
5.	SPL at 1m 12V	97±4dB
6.	Tone characteristic	pulse tone(bleep)
7.	Temperature Range	-20-+70 °C
8.	Storage Range	-20-+70 °C
9.	Housing color	black
10.	IP-rating	IP67

2.Test Method

The alarm is located in a free field or an equivalent fully anechoic room. The microphone is directed toward the alarm sound output openting along the zero degree axis and at the distance specified by the test requirement.

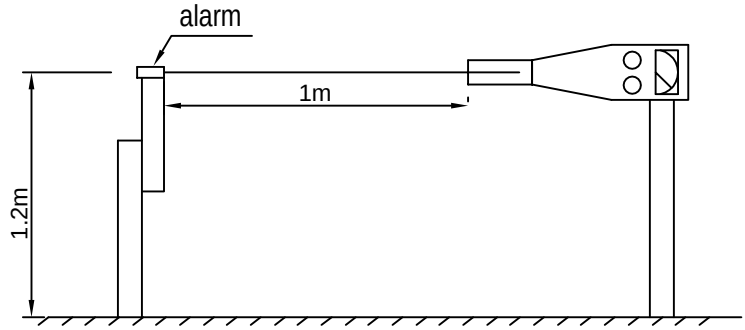

This print and information there in are proprietary to BeStar Holding Co., Ltd. and shall not be used in whole or in part without its written content

				Date:	2017/12/19	BUS97P12VIP67B
				Drawn by:	龚 云	
C	2017/12/19	龚 云		Checked by:	宣 泽	Alarm
Rev.	Date	Drawn	Note	Approved by:	程久生	
BESTAR HOLDING CO.,LTD www.bestargroups.com wu@be-star.com					DRG NO:BS/TEA01.359C	Page:02 of 06

BUS97P12VIP67B

3.Drawing

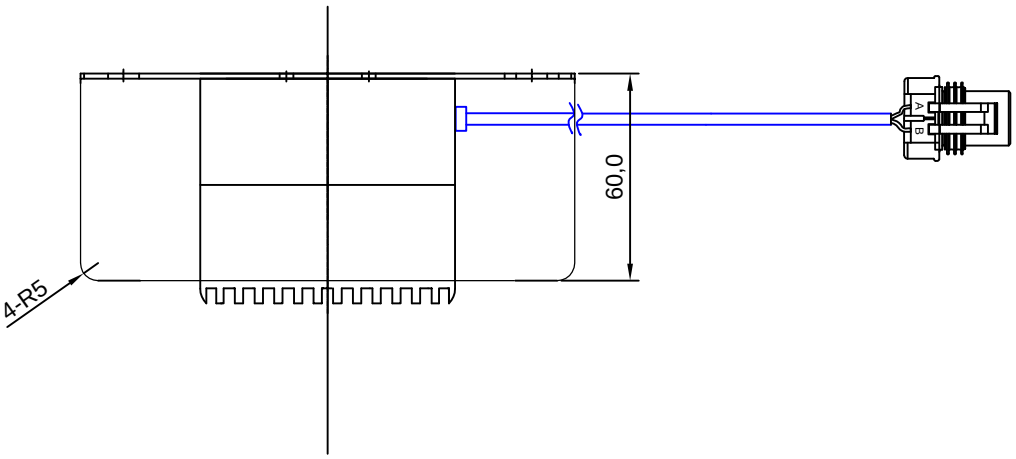

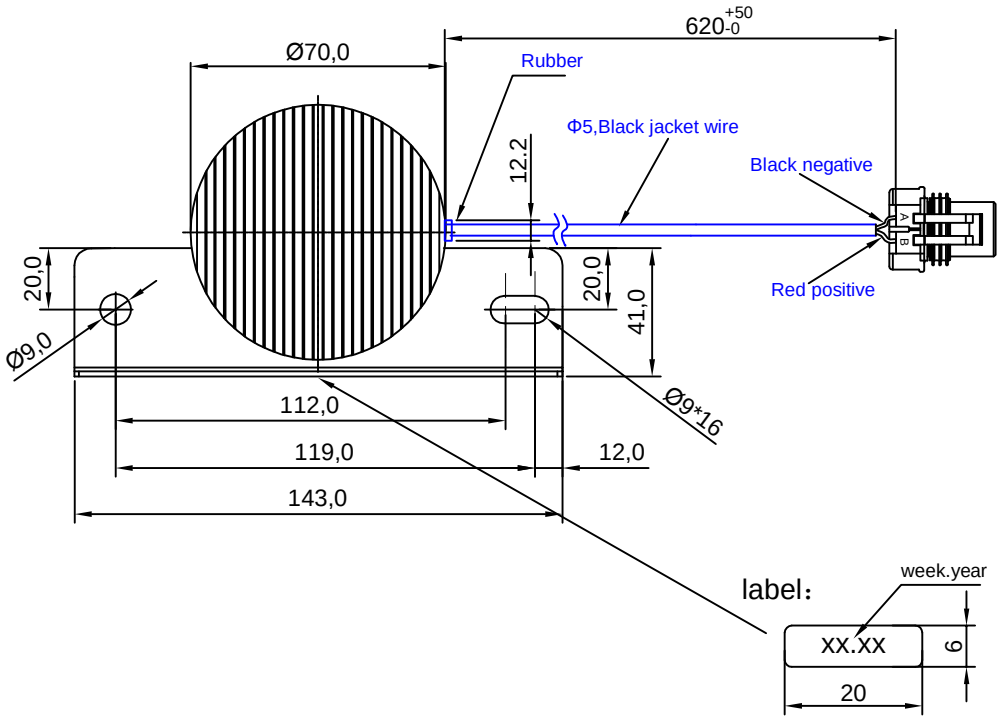

This print and information there in are proprietary to BeStar Holding Co., Ltd. and shall not be used in whole or in part without its written content

				Date:	2017/12/19
				Drawn by:	龚 云
C	2017/12/19	龚 云		Checked by:	宣 泽
Rev.	Date	Drawn	Note	Approved by:	程久生

BESTAR HOLDING CO.,LTD

www.bestargroups.com wu@be-star.com

BUS97P12VIP67B

Alarm

DRG NO:BS/TEA01.359C

文件号：BS/QDTE045B

BUS97P12VIP67B

4.Reliability Test

4.1 Low Temperature Test

Temperature	-20° C
Duration	98hours

4.2 Heigh Temperature Test

Temperature	+70° C
Duration	98hours

4.3 Humidity Withstanding

Temperature	+40° C
Humidity	95%RH
Duration	98hours

4.4 Durability

Testing after 500hours actural continuous operation

4.5 Shock withstanding

High	75cm
Direction	3

This print and information there in are proprietary to BeStar Holding Co., Ltd. and shall not be used in whole or in part without its written content

				Date:	2017/12/19	BUS97P12VIP67B
				Drawn by:	龚 云	
C	2017/12/19	龚 云		Checked by:	宣 泽	Alarm
Rev.	Date	Drawn	Note	Approved by:	程久生	
BESTAR HOLDING CO.,LTD www.bestargroups.com wu@be-star.com					DRG NO:BS/TEA01.359C	Page:04 of 06

BUS97P12VIP67B

5.Packing

5.1Packing quantity: 1pcs per small box.
Box size: 145x80x80(mm)
Total 27 pcs per carton
Temporary carton size: 46x28x28(cm)

5.2Packing drawing

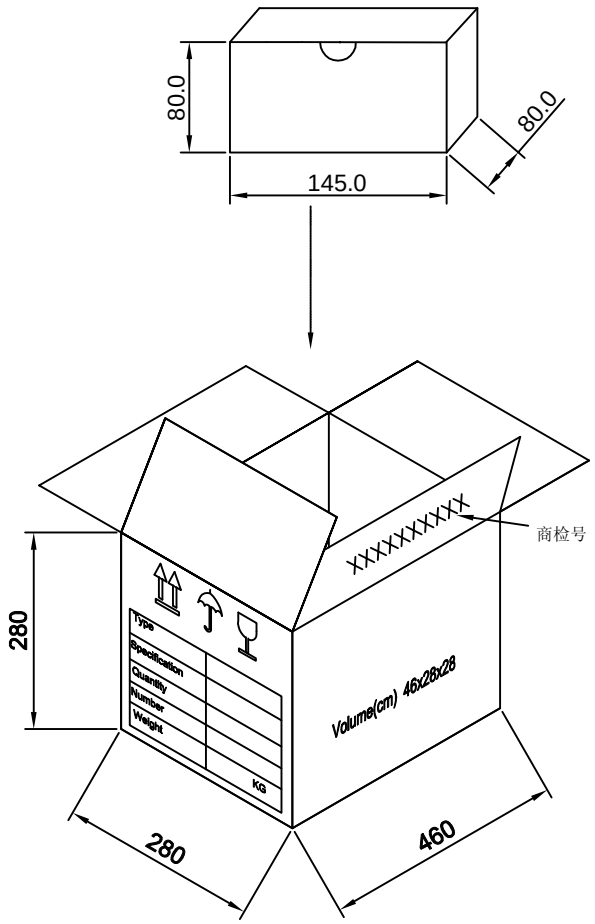

注: 外盒尺寸:46x28x28cm

This print and information there in are proprietary to BeStar Holding Co., Ltd. and shall not be used in whole or in part without its written content

				Date:	2017/12/19	BUS97P12VIP67B
				Drawn by:	龚 云	
C	2017/12/19	龚 云		Checked by:	宣 泽	Alarm
Rev.	Date	Drawn	Note	Approved by:	程久生	
BESTAR HOLDING CO.,LTD www.bestargroups.com wu@be-star.com						DRG NO:BS/TEA01.359C / Page:05 of 06

BUS97P12VIP67B

6. History change record

version No.	Change Items		Date	Drawn	Approved
	Before	After			
A			2013.06.17	王冬琴	姚利明
B		Remove the terminal	2013.11.20	王冬琴	程久生
C		Add the connector	2017.12.19	龚 云	程久生

This print and information there in are proprietary to BeStar Holding Co., Ltd. and shall not be used in whole or in part without its written content

			Date:	2017/12/19	BUS97P12VIP67B
			Drawn by:	龚 云	
C	2017/12/19	龚 云	Checked by:	宣 泽	Alarm
Rev.	Date	Drawn	Approved by:	程久生	

BESTAR HOLDING CO.,LTD
www.bestargroups.com wu@be-star.com