SPECIFICATION
FOR PIEZO ELECTRIC BUZZER

TOTAL PAGE	08	www.be-star.com	RoHS

Customer		Model Name	FT-35G-3.1A1-W045
Customer P/N		Product No.	
Date	24 Mar. 16	Issue No.	BS/TEY01.653
Page	01 of 08	Issue Date	16/03/24

Approval：

1.Electrical characteristics
2.Dimension
3.Measuring Method
4."Pull off"force between silver and ceramic layer
5.Reliability Test
6.Packing
7.History change record

Drawn by	Checked by	Approved by	Customer approved

BESTAR ACOUSTICS CO.,LTD
No.199 HuangHe West Road.New district,ChangZhou,JiangSu Province,P.R.China
Tel: +86 519 88222567 ***Fax:*** +86 519 88222551
E-mail:wu@be-star.com ***http://www.be-star.com***

FT-35G-3.1A1-W045

1.Electrical characteristics

No.	Item	Specification	Condition
1.	Resonant Frequency	3.1±0.3KHz	The resonant frequency is suitable only for piezo element without wire
2.	Resonant Impedance	200ohm max	The resonant Impedance is suitable only for piezo element without wire
3.	Static Capacitance	C:30±30%nF	at 120Hz/1V
4.	Insulation Resistance	Min.250M ohm	The Insulation Resistance is suitable only for piezo element without wire
5.	Operating Voltage	3-50 Vp-p MAX	
6.	"Pull off"force between silver and ceramic layer (horizontally)	20~28N	See page 4 &4.2a
7.	"Pull off"force between silver and ceramic layer (vertically)	2.5~8N	See page 4 &4.2b
8.	Operating Temperature	-20...+70°C	
9.	Storage Temperature	-30...+80°C	
10.	Lead Wire	UL1571-AWG #28	
11.	Metallic supporter	Stainless Steel	

This print and information there in are proprietary to Bestar Electronics Industry Co., Ltd. and shall not be used in whole or in part without its written content

FT-35G-3.1A1-W045

2.Dimension

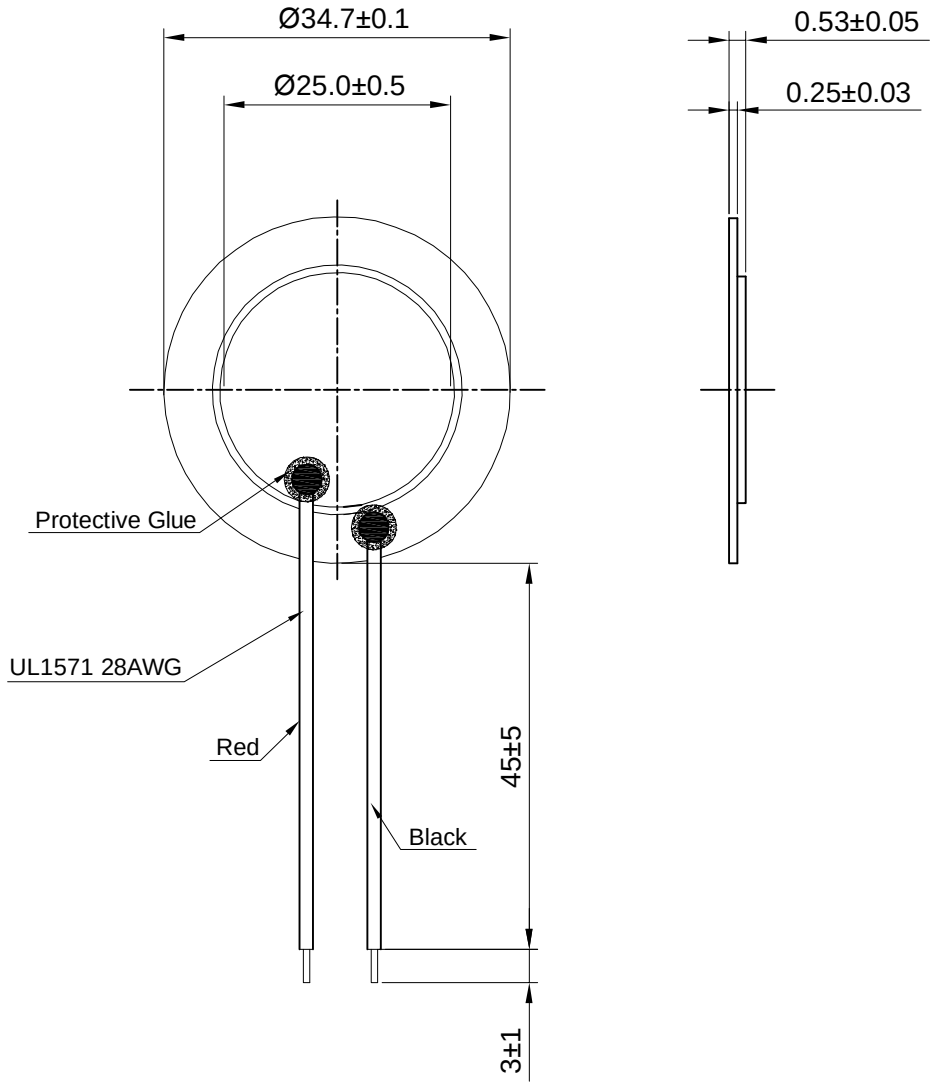

This print and information there in are proprietary to Bestar Electronics Industry Co., Ltd. and shall not be used in whole or in part without its written content

				Date:	16/03/24	FT-35G-3.1A1-W045
				Drawn by:	Liu Rufeng	
				Checked by:	Zou Dongping	Piezo Ceramic Element
Rev.	Date	Drawn	Note	Approved by:	Li Hongyuan	
BESTAR ELECTRONICS INDUSTRY CO.,LTD www.be-star.com wu@be-star.com					DRG NO: BS/TEY01.653	Page:03 of 08

3.Measuring Method

3.1.Resonant Frequency/Resonant Impedance

piezoelectric diaphragm shall be clamped at a node point as shown in following figure to be free from any mechanical stress,and measured its resonant frequency and resonant impedance by using YW2788 synthesis parameter test apparatus or equivalent



3.2.Capacitance:

An electrostatic capacity capacitance shall be measured at 120Hz by using LCR meter, such as DF2812A LCR numerical bridge or equivalent.the part shall be clamped at the node .



3.3.Insulation Resistance:

An insulation resistance shall be measured by using an insulation resistance meter,suach as DF2863 insulation resistance meter.



3.4.Measureing Condition:

Parts shall be measured under a condition(Temperature:+5°C to +35°C,Humidity:45 to 85% R.H.) unless the standard condition(Temperature:+25± 3°C,Humidity:60± 10%R.H.)is regulated to measure.

This print and information there in are proprietary to Bestar Electronics Industry Co., Ltd. and shall not be used in whole or in part without its written content

FT-35G-3.1A1-W045

4."Pull off"force between silver and ceramic layer

Note:

4.1 Lead wire (UL 1571 AWG#28)to be soldered on the silver by handsoldering at 300±10°C duration 2±0.5 sec

4.2.a Pull force by horizontal direction is 20~28N

4.2.b Pull force by vertical direction is 2.5~8N

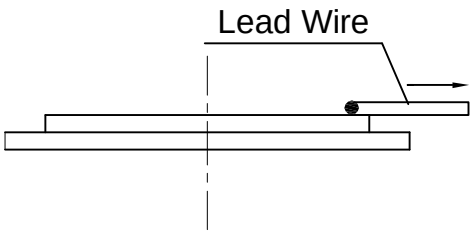

FIG.1 Direction of Lead Wire (horizontally)

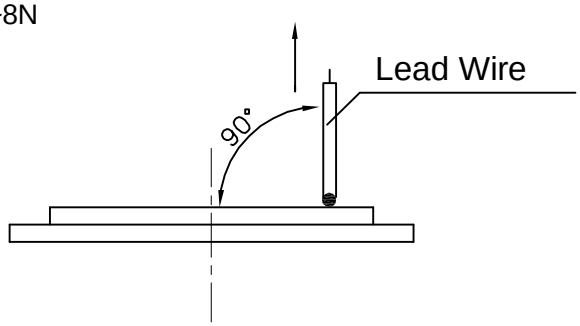

FIG.2 Direction of Lead Wire (vertically)

This print and information there in are proprietary to Bestar Electronics Industry Co., Ltd. and shall not be used in whole or in part without its written content

				Date:	16/03/24	FT-35G-3.1A1-W045
				Drawn by:	Liu Rufeng	
				Checked by:	Zou Dongping	Piezo Ceramic Element
Rev.	Date	Drawn	Note	Approved by:	Li Hongyuan	
BESTAR ELECTRONICS INDUSTRY CO.,LTD www.be-star.com wu@be-star.com					DRG NO: BS/TEY01.033D	Page:05 of 08

文件号：BS/QDTE045B

FT-35G-3.1A1-W045

5. Reliability test

5.1 Life test at high temperature

Temperature	+80°C
Duration	96hrs

5.2 Life test at low temperature

Temperature	-30°C
Duration	96hrs

5.3 Temperature cycle test

Cycles 5

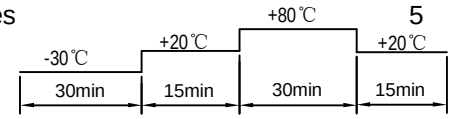

5.4 Humidity cycle test

Cycles 5

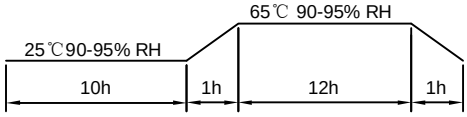

All these tests above should be measured after leaving normal temperature for 2hrs.

5.5 Vibration Test

Vibration Frequency	10~55Hz
Amplitude	1.53mm
Direction	3(x.y&z)
Duration	2hrs each direction (total 6 hrs)

5.6 Drop test

Height (to 10mm thickness woodenboard)	100cm
Direction	3(x.y&z)

5.7 Solderability Test

Soldering Temperature	255 °C
Duration	3 sec

5.8 Accelerated Life Test (ALT)

Thermal Cycling :

Thermal Cycling consists of temperature ramping components for 30 minutes in the Testing oven from -20°C to 70°C. The components are then exposed for 1 hour at The extremes and the cycle is repeated for a total of 15 cycles..

Thermal Soak:

Thermal soak consists of exposing a powered unit to 70°C and 85% relative humidity for 45 days.

Notice: All specifications must be satisfied in this condition.

This print and information there in are proprietary to Bestar Electronics Industry Co., Ltd. and shall not be used in whole or in part without its written content

FT-35G-3.1A1-W045

6.Packing

6.1Packing Drawing

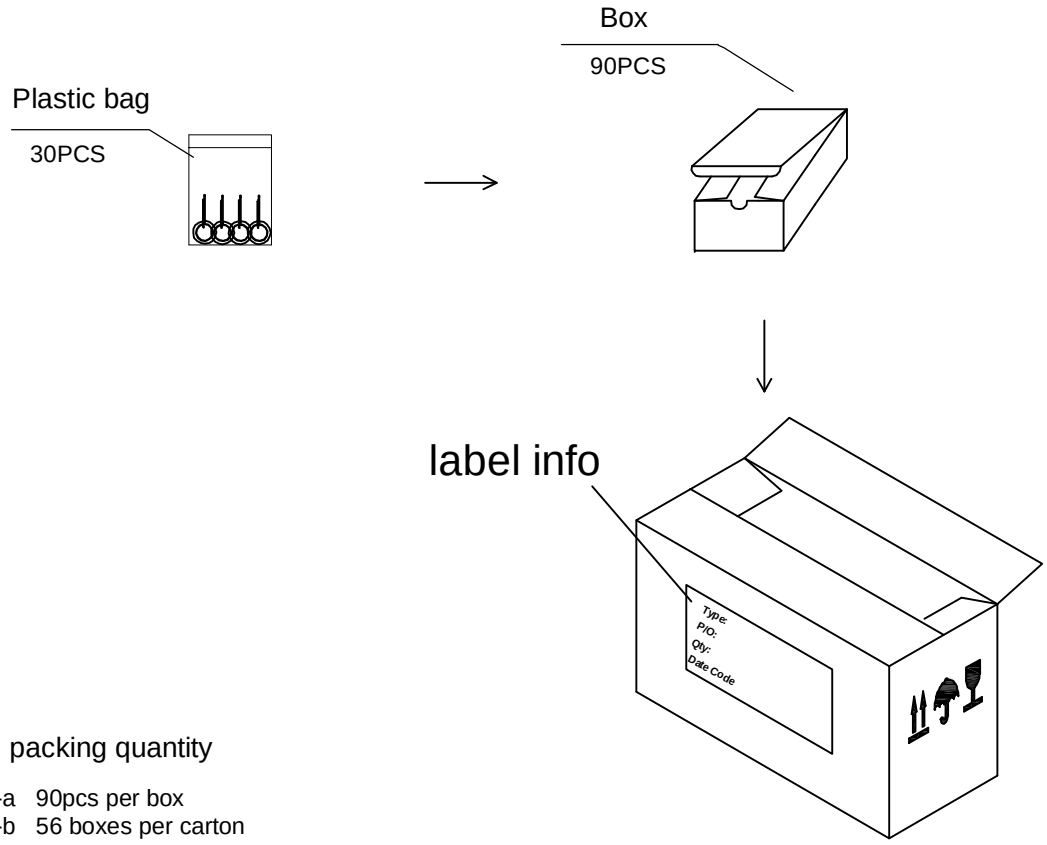

6.2 packing quantity

6.2-a 90pcs per box
6.2-b 56 boxes per carton
6.2-c Total 5040pcs per carton
6.2-d Carton size 50x27x26cm
6.2-e Piezos shall be packaged in suitable low-sulfur . air tight stacking containers to prevent oxidation of the metal disc. corrosion of the silver electrode. And damage during shipment and storage. Cartons shall be stackable to four feet high without damage to piezos.

This print and information there in are proprietary to Bestar Electronics Industry Co., Ltd. and shall not be used in whole or in part without its written content

Rev.	Date	Drawn	Note			
				Date:	16/03/24	FT-35G-3.1A1-W045
				Drawn by:	Liu Rufeng	
				Checked by:	Zou Dongping	Piezo Ceramic Element
				Approved by:	Li Hongyuan	

BESTAR ELECTRONICS INDUSTRY CO.,LTD
www.be-star.com wu@be-star.com

DRG NO: BS/TEY01.653

文件号：BS/ODTE045B

FT-35G-3.1A1-W045

7. History change record

version No.	Change Items		Date	Drawn	Approved
	Before	After			
A			16/03/24	Liu Rufeng	Li Hongyuan

This print and information there in are proprietary to Bestar Electronics Industry Co., Ltd. and shall not be used in whole or in part without its written content