**BeStar Technologies Inc.**
Address: 761 N. 17th Street Unit 4, St. Charles, IL 60174
Tel : 847-261-2850 E-mail : sales@bestartech.com Web : www.bestartech.com

Document Number : 1102-52
Revision : A2
Total Pages : 5
Prepare by : Ting Lok, **Ngan**
Date : 18 September, 2013

**SoniCrest** Brand Acoustic Components
www.jlsonicrest.com
Document Type : Specification
Product Type : Back Electret Condenser Microphone Component
Part Number : HBO0402D-62

| | | |
|---|---|---|
| A1 - New issue created by Holmes, Poon on 14 Feb., 2011 | | |
| A2 - Updated section 4 and 6 by Ting Lok, Ngan on 18 Sept., 2013 | | |
| | | |
| | | |

This material is the property of BeStar Technologies Inc.
Unauthorized copying or use of this material is prohibited.

## 1. Purpose and Scope

This document contains both general requirements, qualification requirements, and those specific electrical, mechanical requirements for this part.

## 2. Description

Ø4mm back electret condenser microphone, RoHS compliant.

## 3. Application

Telecommunication Equipment, Computers and Peripherals, etc.

## 4. Component Requirement

### 4.1. General Requirement

**4.1.1.** Operating Temperature Range : -40°C to +85°C

**4.1.2.** Storage Temperature Range : -40°C to +85°C

### 4.2. Electrical Requirement

**4.2.1.** Directivity : Omnidirectional

**4.2.2.** Sensitivity (0dB = 1V/Pa, 1kHz, rated voltage, $R_L$ = 2.2KΩ) : -42 ± 3 dB

**4.2.3.** Rated Voltage : 2V

**4.2.4.** Maximum Operating Voltage : 10V

**4.2.5.** Current Consumption : <=0.5mA

**4.2.6.** Frequency Range : 100 ~ 10KHz

**4.2.7.** Output Impedance : 2.2KΩ

**4.2.8.** S/N Ratio : >=58dB

**4.2.9.** Maximum input SPL : 110dB

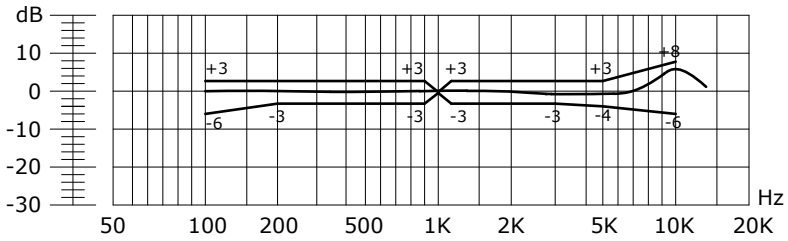


**Figure 1. Frequency Response**

### 4.3. Mechanical Requirement

**4.3.1.** Layout and Dimension : See Section 6, Figure 4

### 4.4. Test Setup

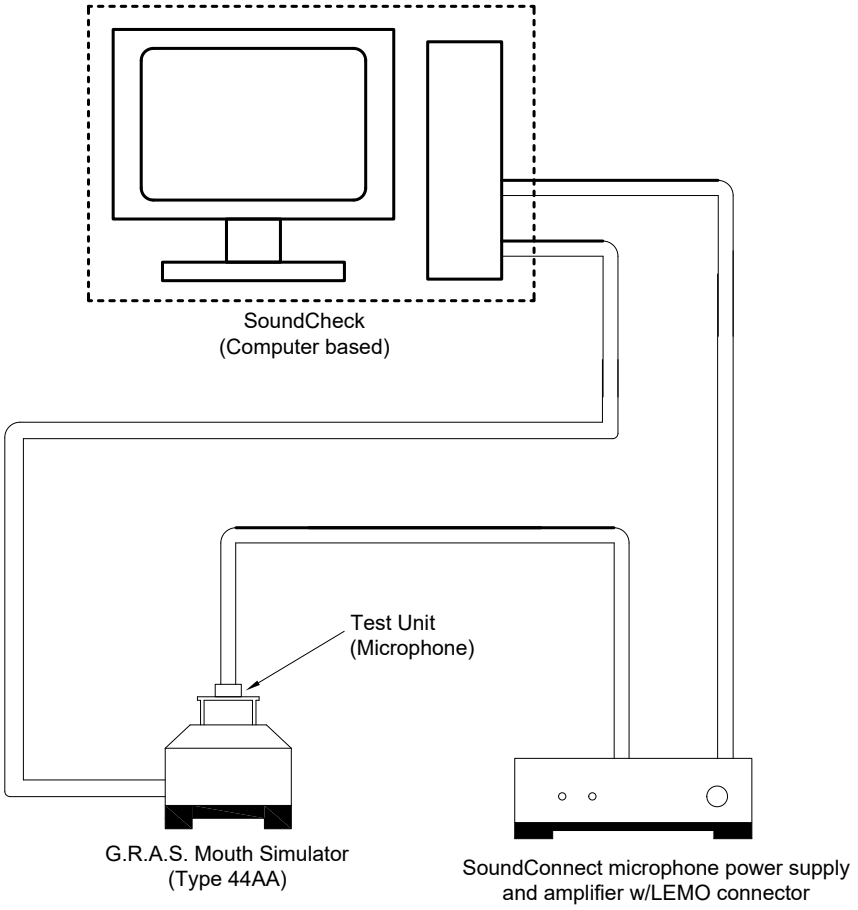


**Figure 2. Test Setup**

**Notes** : Apply sinusoidal wave from SoundCheck Audio Analyzer (Computer based) to speaker in G.R.A.S. Mouth Simulator Type 44AA. Measure sensitivity of test unit with specified driving circuit. The whole testing system should be calibrated based on calibration procedure recommended by the manufacturer before measurement. Measurement should be carried out in an excellent insulation from external noise environment.

### 4.5. Schematic Diagram

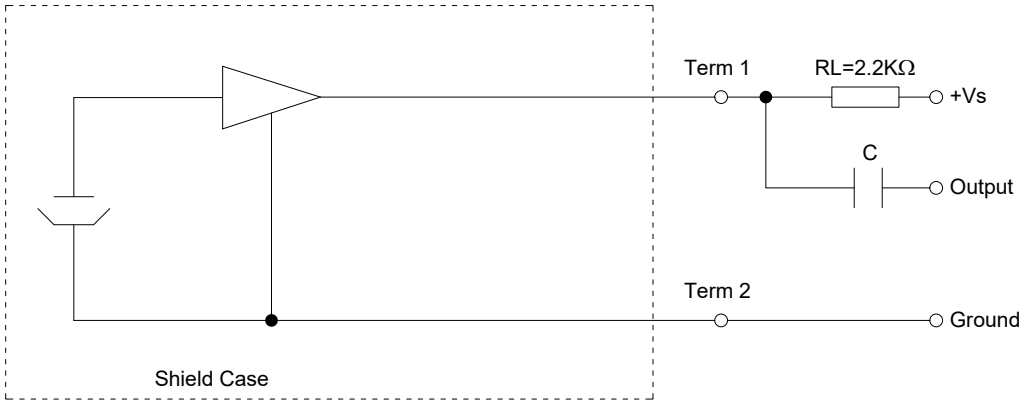


**Figure 3. Schematic Diagram**

## 5. Reliability Test

**5.1.** **High Temperature** : Subject samples to +70°C and operate for 200 hours. Components must be fully stabilized at temperature extremes before data is taken, which may require up to a 2 hours soak.

**5.2.** **Low Temperature** : Subject samples to -25°C and operate for 200 hours. Components must be fully stabilized at temperature extremes before data is taken, which may require up to a 2 hours soak.

**5.3.** **Static Humidity** : Precondition at +25°C for 1 hour. Then expose to +40°C with 90 to 95% relative humidity for 200 hours. Finally dry at room ambient for 2 hours before taking final measurement.

**5.4.** **Temperature Shock** : Each temperature cycle shall consist of 30 minutes at -25°C, 10 minutes at +20°C, 30 minutes at +70°C and 10 minutes at +20°C. Test duration is for 5 cycles. Components must be fully stabilized at temperature extremes before data is taken, which may require up to a 2 hours soak.

**5.5.** **Random Vibration** : Secure samples. Vibrated randomly 10 ~ 55Hz with 1.52mm peak amplitude in 3 directions (x, y and z). The test duration is 2 hours per plane.

**5.6.** **Drop Test** : Drop samples naturally from the height of 1m onto concrete floor in 3 directions in state of outer packing.

**5.7.** **Electrostatic Discharge Test (Contact)**: Charge 6000VDC to the 150pF capacitor, and discharge the output of microphone 10 times through the 330Ω resistor.

**5.8.** **Electrostatic Discharge Test (Air)**: Charge 8000VDC to the 150pF capacitor, and discharge the sound hole of microphone 10 times through the 330Ω resistor.

## 6. Mechanical Layout

Unit : mm
Tolerance : Linear XX.X = ±0.2
XX.XX = ±0.05
Angular = ±0.25°
(unless otherwise specified)

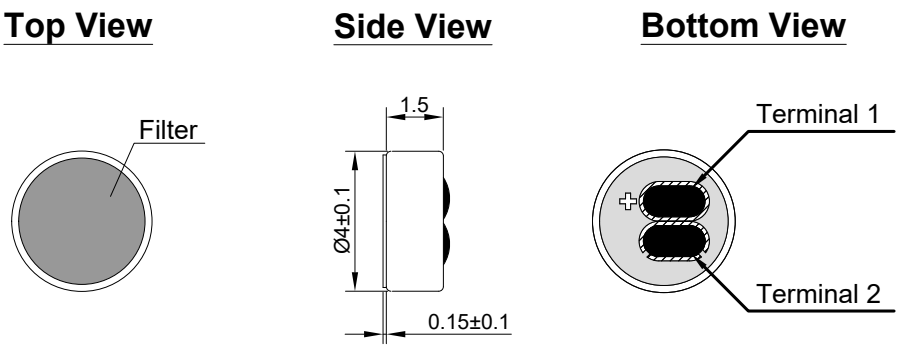


**Figure 4. HBO0402D-62 Mechanical Layout**