BeStar Technologies Inc.
Address: 761 N. 17th Street Unit 4, St. Charles, IL 60174
Tel : 847-261-2850 E-mail : sales@bestartech.com Web : www.bestartech.com

Document Number : 1706-70
Revision : A1
Total Pages : 6
Prepare by : Loki, **Lo**
Date : 28 June, 2017

SoniCrest Brand Acoustic Components
www.jlsonicrest.com
Document Type : Specification
Product Type : Back Electret Condenser Microphone Component
Part Number : HBO0603Z-50/1211

A1 - New issue created by Loki, Lo on 28 Jun., 2017		

This material is the property of BeStar Technologies Inc.
Unauthorized copying or use of this material is prohibited.

1. Purpose and Scope

This document contains both general requirements, qualification requirements, and those specific electrical, mechanical requirements for this part.

2. Description

Ø5.8mm back electret condenser microphone with sensitivity tolerance ±2dB, S/N >= 74dB, 10pF and 33pF capacitors, phase control and 110mm shielded wire, RoHS compliant.

3. Application

Telecommunication Equipment, Computers and Peripherals, etc.

4. Component Requirement

4.1. General Requirement

4.1.1.	Operating Temperature Range	: -20°C to +70°C
4.1.2.	Storage Temperature Range	: -40°C to +85°C

4.2. Electrical Requirement

4.2.1.	Directivity	: Omnidirectional
4.2.2.	Sensitivity (0dB = 1V/Pa, 1kHz, rated voltage, R_L = 2.2kΩ)	: -30 ± 2 dB -30.5 ~ -28 dB (Bin. A) -32 ~ -29.5 dB (Bin. B)
4.2.3.	Phase (0dB = 1V/Pa, rated voltage, R_L = 2.2kΩ)	: 0° ~ 5° (30Hz) -5° ~ 0° (160Hz)
4.2.4.	Rated Voltage	: 3V
4.2.5.	Operating Voltage Range	: 1 ~ 10V
4.2.6.	Current Consumption	: <=0.4mA
4.2.7.	Frequency Range	: 20 ~ 10KHz
4.2.8.	Output Impedance	: <=2.2kΩ
4.2.9.	S/N Ratio	: >=74dB
4.2.10.	Maximum input SPL (THD <3%)	: 110dB
4.2.11.	Sensitivity Variation (Vs:3V to 2V)	: Max. -3dB

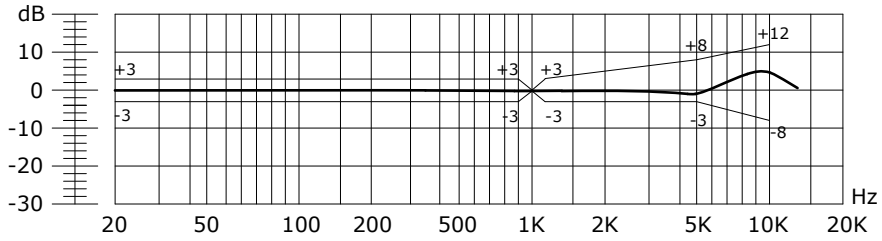

Figure 1. Frequency Response

4.3. Mechanical Requirement

4.3.1. Layout and Dimension : See section 6, figure 4

4.4. Test Setup

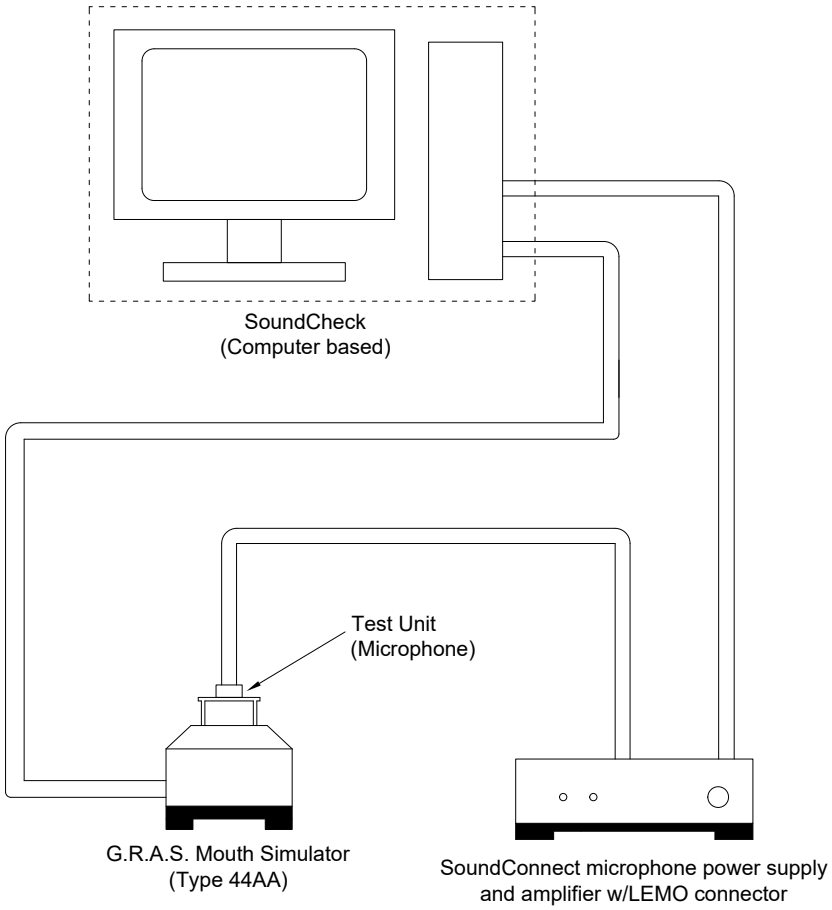

Figure 2. Test Setup

Notes : Apply sinusoidal wave from SoundCheck Audio Analyzer (Computer based) to speaker in G.R.A.S. Mouth Simulator Type 44AA. Measure sensitivity of test unit with specified driving circuit. The whole testing system should be calibrated based on calibration procedure recommended by the manufacturer before measurement. Measurement should be carried out in an excellent insulation from external noise environment.

4.5. Schematic Diagram

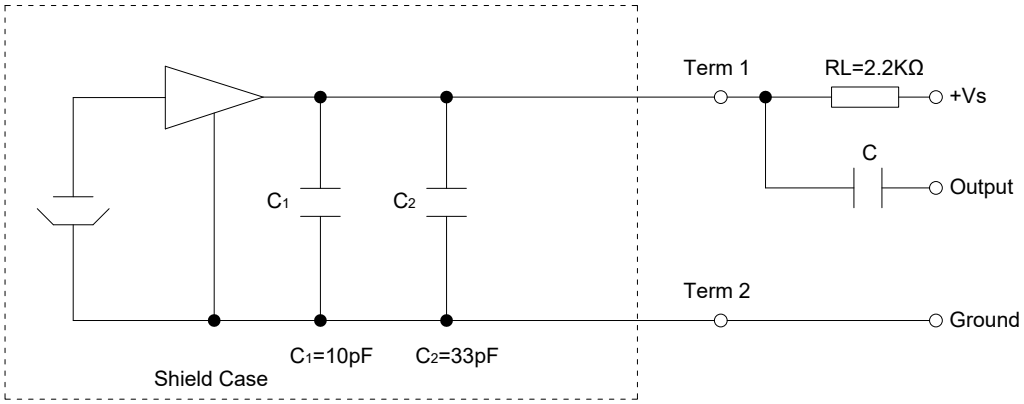

Figure 3. Schematic Diagram

5. Reliability Test

5.1. High Temperature : Subject samples to +70°C for 200 hours. Components must be fully stabilized at temperature extremes before data is taken, which may require up to a 2 hours soak.

5.2. Low Temperature : Subject samples to -25°C for 200 hours. Components must be fully stabilized at temperature extremes before data is taken, which may require up to a 2 hours soak.

5.3. Temperature Shock : Each temperature cycle shall consist of 30 minutes at -25°C, 10 minutes at +20°C, 30 minutes at +70°C and 10 minutes at +20°C. Test duration is for 5 cycles. Components must be fully stabilized at temperature extremes before data is taken, which may require up to a 2 hours soak.

5.4. Static Humidity : Precondition at room temperature for 1 hour. Then expose to +40°C with 90% ~ 95% relative humidity for 200 hours. Finally dry at room ambient for 2 hours before taking final measurement.

5.5. Drop Test : Drop samples with outer packing naturally from the height of 100cm onto the concrete floor in 3 directions (x, y and z).

5.6. Random Vibration : Secure samples in standard packing. Vibrated randomly 10 ~ 55Hz with 1.52 mm peak amplitude in 3 directions (x, y and z). The test duration is 2 hours per plane.

5.7. Contact Discharge : Charge 6000V DC to the capacitor with 150pF, and discharge the output of the MIC ten times through the resistance of 330Ω, then check and test it.

5.8. Air Discharge : Charge 8000V DC to the capacitor with 150pF, and discharge the sound hole of the MIC ten times through the resistance of 330Ω, then check and test it.

6. Mechanical Layout

Unit : mm
Tolerance : Linear XX.X = ±0.3
XX.XX = ±0.05
Angular = ±0.25°
(unless otherwise specified)

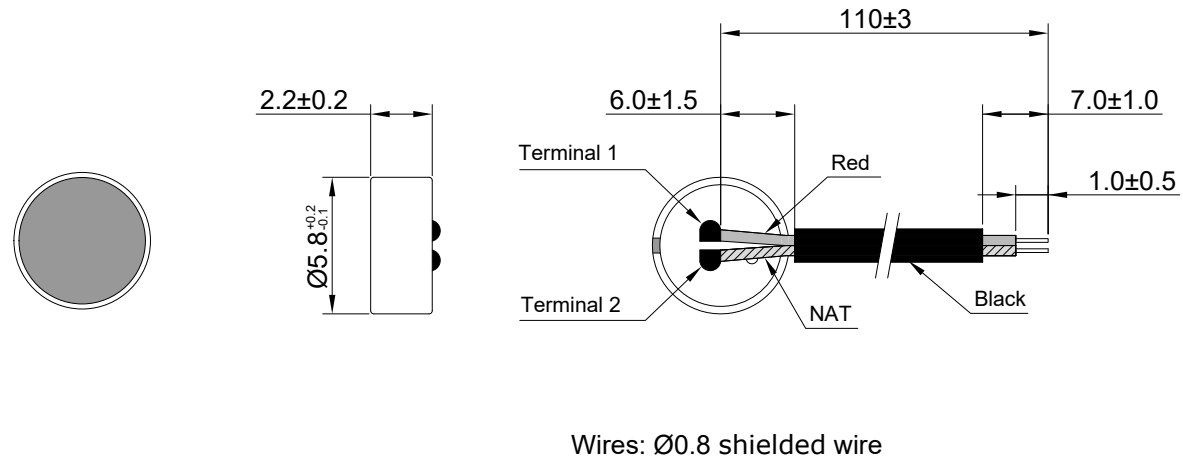

Figure 4. HBO0603Z-50/1211 Mechanical Layout

7. Standard Packing Requirements

7.1. Packing Quantity : 100 pieces per pack, 10 pack per unit, 10 unit per inner box
2 inner boxes per carton (Total 20000 pieces)

7.2. Tray & Carton Layout

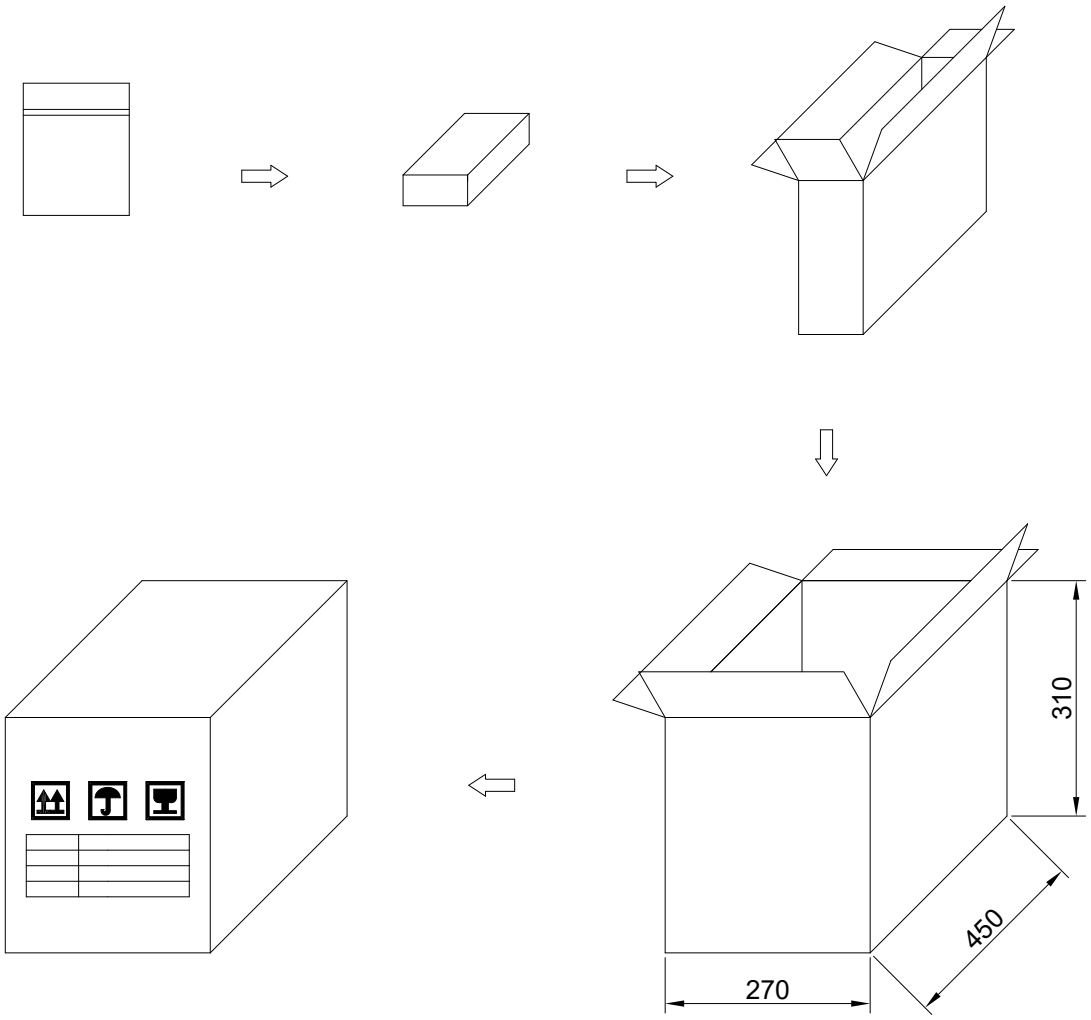

Figure 5. Tray and Carton Layout