BeStar Technologies Inc.
Address: 761 N. 17th Street Unit 4, St. Charles, IL 60174
Tel : 847-261-2850 E-mail : sales@bestartech.com Web : www.bestartech.com

Document Number : 1603-59
Revision : A1
Total Pages : 5
Prepare by : Lokl, **Lo**
Date : 14 March, 2016

SoniCrest Brand Acoustic Components
www.jlsonicrest.com
Document Type : Specification
Product Type : Back Electret Condenser Microphone Component
Part Number : HBU1002B-70/463

A1 - New issue created by Loki, Lo on 14 Mar., 2016		

This material is the property of BeStar Technologies Inc.
Unauthorized copying or use of this material is prohibited.

1. Purpose and Scope

This document contains both general requirements, qualification requirements, and those specific electrical, mechanical requirements for this part.

2. Description

Ø9.7mm back electret condenser microphone with 10pF and 33pF capacitors, RoHS compliant.

3. Application

Telecommunication Equipment, Computers and Peripherals, etc.

4. Component Requirement

4.1. General Requirement

4.1.1.	Operating Temperature Range	: -20°C to +70°C
4.1.2.	Storage Temperature Range	: -30°C to +80°C

4.2. Electrical Requirement

4.2.1.	Directivity	: Unidirectional
4.2.2.	Sensitivity (0dB = 1V/Pa, rated voltage, R_L = 2kΩ)	: -50 ± 3 dB
4.2.3.	Rated Voltage	: 2V
4.2.4.	Operating Voltage Range	: 1 ~ 10V
4.2.5.	Current Consumption	: <=0.5mA
4.2.6.	Frequency Range	: 100 ~ 10KHz
4.2.7.	Output Impedance	: <=2.2kΩ
4.2.8.	S/N Ratio	: >=50dB
4.2.9.	Maximum input SPL (THD <3%)	: 110dB
4.2.10.	Sensitivity Variation (Vs:2V to 1.5V)	: Max. -3dB
4.2.11.	Sensitivity Variation (0° ~ 180°±20° at 1KHz)	: Min. 14dB

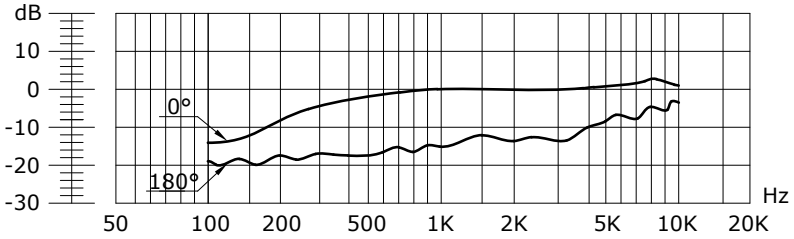

Figure 1. Frequency Response

4.3. Mechanical Requirement

4.3.1. Layout and Dimension : See section 6, figure 4

4.4. Test Setup

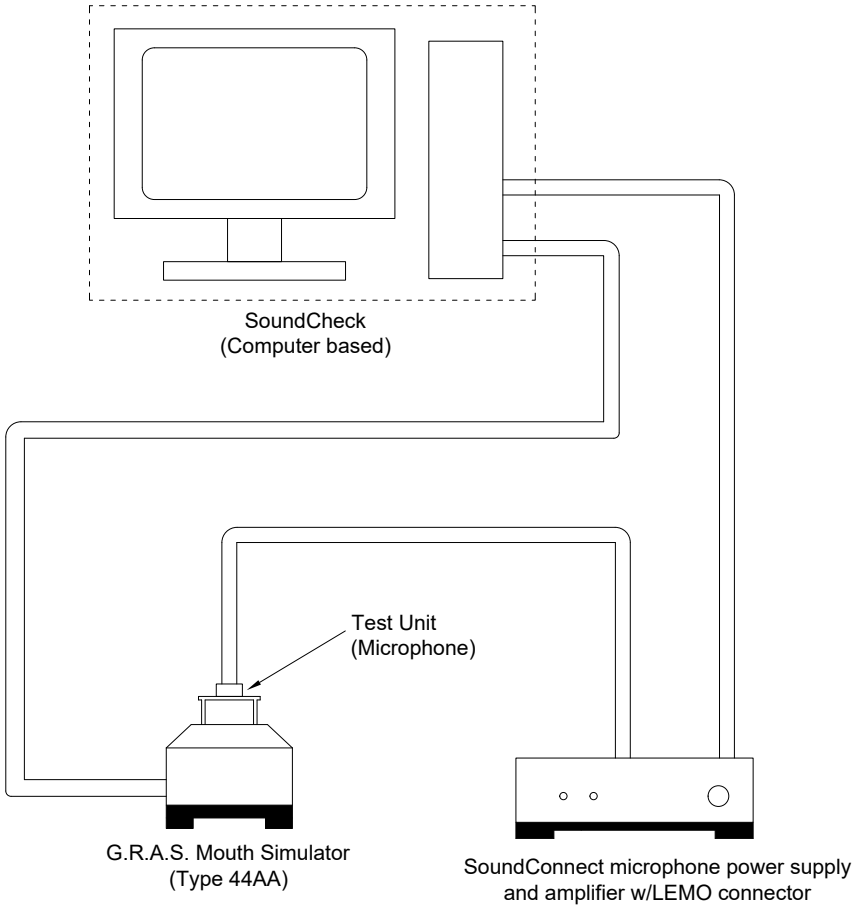

Figure 2. Test Setup

Notes : Apply sinusoidal wave from SoundCheck Audio Analyzer (Computer based) to speaker in G.R.A.S. Mouth Simulator Type 44AA. Measure sensitivity of test unit with specified driving circuit. The whole testing system should be calibrated based on calibration procedure recommended by the manufacturer before measurement. Measurement should be carried out in an excellent insulation from external noise environment.

4.5. Schematic Diagram

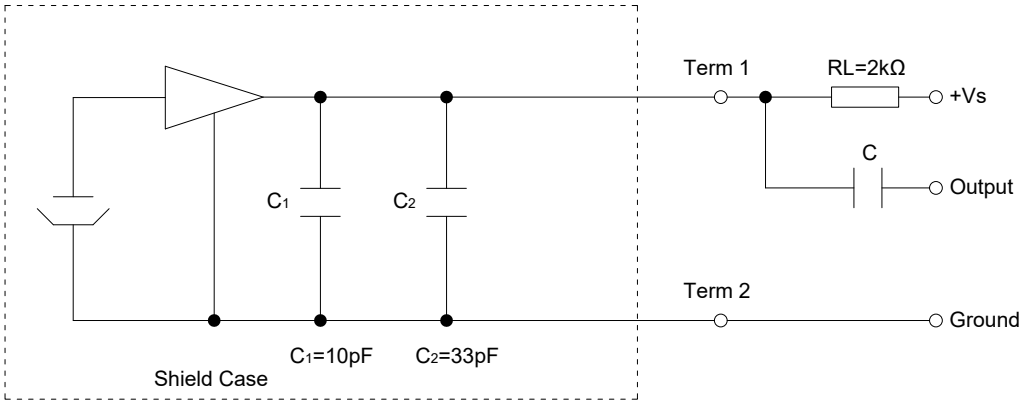

Figure 3. Schematic Diagram

5. Reliability Test

5.1. High Temperature : Subject samples to +70°C for 72 hours. Components must be fully stabilized at temperature extremes before data is taken, which may require up to a 2 hours soak.

5.2. Low Temperature : Subject samples to -20°C for 72 hours. Components must be fully stabilized at temperature extremes before data is taken, which may require up to a 2 hours soak.

5.3. Static Humidity : Precondition at +25°C for 1 hour. Then expose to +40°C with 90 to 95% relative humidity for 200 hours. Finally dry at room ambient for 2 hours before taking final measurement.

6. Mechanical Layout

Unit : mm
Tolerance : Linear XX.X = ±0.3
XX.XX = ±0.05
Angular = ±0.25°
(unless otherwise specified)

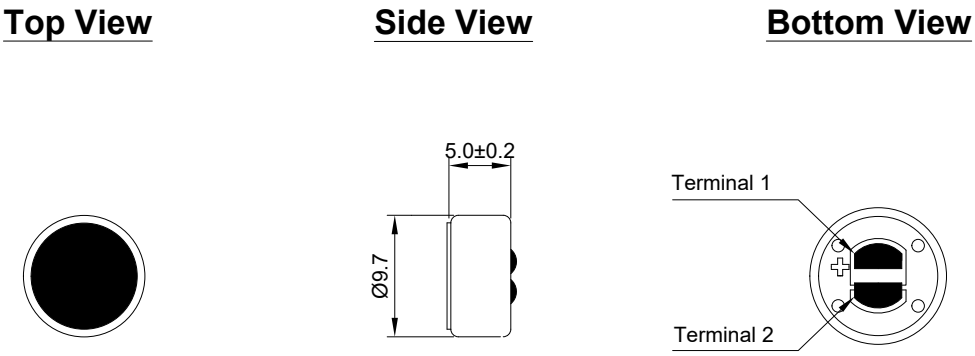

Figure 4. HBU1002B-70/463 Mechanical Layout