BeStar Technologies Inc.
Address: 761 N. 17th Street Unit 4, St. Charles, IL 60174
Tel : 847-261-2850 E-mail : sales@bestartech.com Web : www.bestartech.com

Document Number : 0209-58
Revision : A8
Total Pages : 5
Prepare by : Stella, **Leung**
Date : 17 August., 2012

SoniCrest Brand Acoustic Components
www.jlsonicrest.com
Document Type : Specification
Product Type : Electro-magnetic Sound Generator Component
Part Number : HCM1205F

A3 - Updated layout & format by Leo, Sin on 25 Mar., 2003	A7 - Added section 8 by Holmes, Poon on 9 Jan., 2012	
A4 - Updated RoHS version by Leo, Sin on 28 Jun., 2006	A8 - Updated section 4 & 6 by Stella, Leung on 17 Aug., 2012	
A5 - Updated Mechanical layuot by Leo, Sin on 17 Oct., 2006		
A6 - Added soldering temperature profile by Leo, Sin on 25 Mar., 2008		

This material is the property of BeStar Technologies Inc.
Unauthorized copying or use of this material is prohibited.

1. Purpose and Scope

This document contains both general requirements, qualification requirements, and those specific electrical, mechanical requirements for this part.

2. Description

Ø12mm electro-magnetic sound generator, RoHS compliant.

3. Application

Telecommunication Equipment, Computers and Peripherals, Portable Equipment, Automobile Electronics, POS System, etc.

4. Component Requirement

4.1 General Requirement

4.1.1. Operating Temperature Range : -20°C to +60°C

4.1.2. Storage Temperature Range : -30°C to +70°C

4.1.3. Weight : Approx. 2g

4.1.4. Housing Material : PPO

4.2 Electrical Requirement

4.2.1. Rated Voltage : 5V

4.2.2. Operating Voltage : 4 ~ 8 V

4.2.3. Rated Current : <=60mA

4.2.4. Coil Resistance : 45 ± 4 Ω

4.2.5. Rated Frequency : 2400Hz

4.2.6. Sound Pressure Level at 10cm (Applying rated voltage) : >=85dB

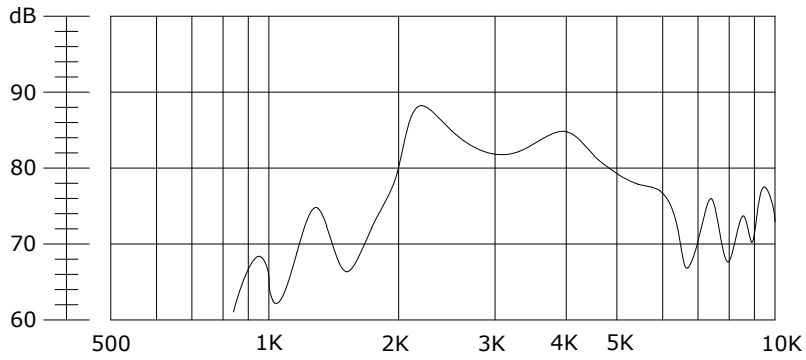

Figure 1. Frequency Response

4.3 Mechanical Requirement

4.3.1. Layout and Dimension : See Section 7, Figure 4

4.4 Test Setup

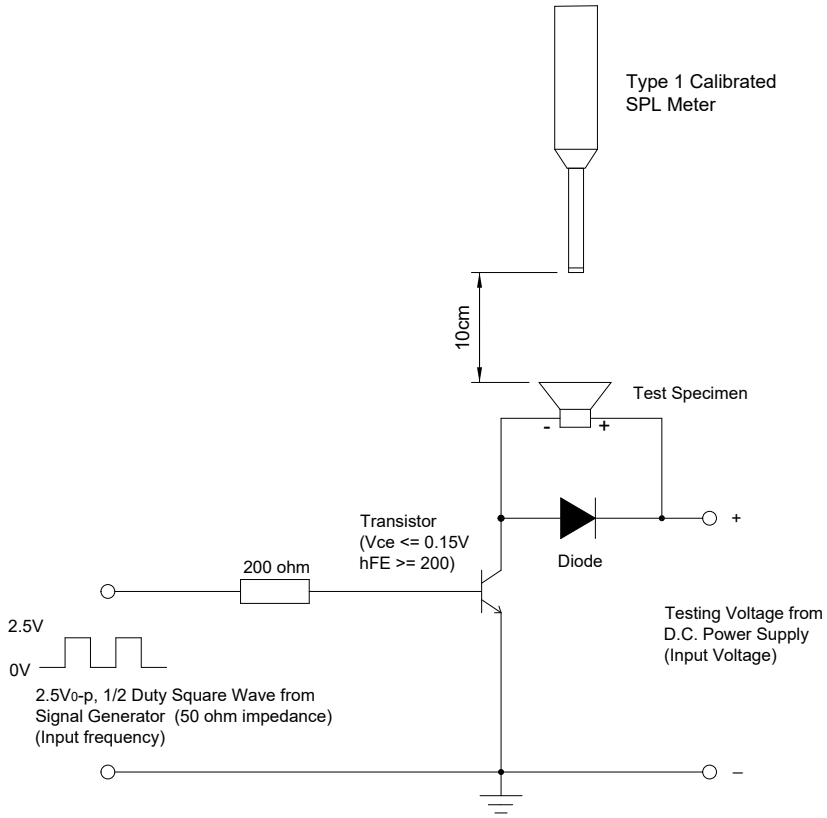

Figure 2. Test Setup

Notes : Apply rated signal from Signal Generator. Measure SPL using a calibrated SPL meter 10cm from the sound port. Sound level meter to be in accordance with IEC651 (1979) Type 1 and/or ANSI S1.4-1983. The meter must be checked on a daily basis using a calibrated acoustic calibrator recommended by the manufacturer. Measurement should be carried out in a free field environment or at least 40cm from any surface.

5. Reliability Test

5.1. Operating Life : Subject samples to room condition for 96 hours under rated voltage

5.2. High Temperature : Subject samples to +60 ± 3 °C and operate for 96 hours. Components must be fully stabilized at temperature extremes before data is taken, which may require up to a 2 hours soak.

5.3. Low Temperature : Subject samples to -20 ± 3 °C and operate for 96 hours. Components must be fully stabilized at temperature extremes before data is taken, which may require up to a 2 hours soak.

5.4. Temperature Shock : Each temperature cycle shall consist of 1 hour at -40°C followed by 1 hour at +80°C with a 20 seconds maximum transition time between temperature extremes. Test duration is for 32 cycles.

5.5. Static Humidity : Precondition at room temperature for 1 hour. Then expose to +40°C with 90% to 95% relative humidity for 96 hours. Finally dry at room ambient for 2 hours before taking final measurement.

5.6. Drop Test : Drop samples naturally from the height of 1.5m onto a 10mm thickness wooden board in 3 directions (x, y and z).

6. Recommended Soldering Process Condition

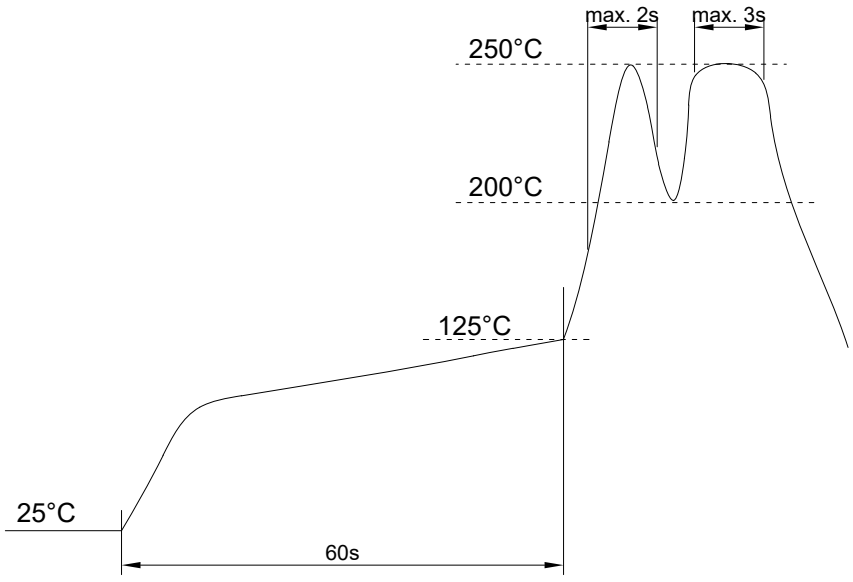

Figure 3. Recommended Soldering Temperature Profile

7. Mechanical Layout

Unit : mm
Tolerance : Linear XX.X = ±0.3
XX.XX = ±0.05
Angular = ±0.25°
(unless otherwise specified)

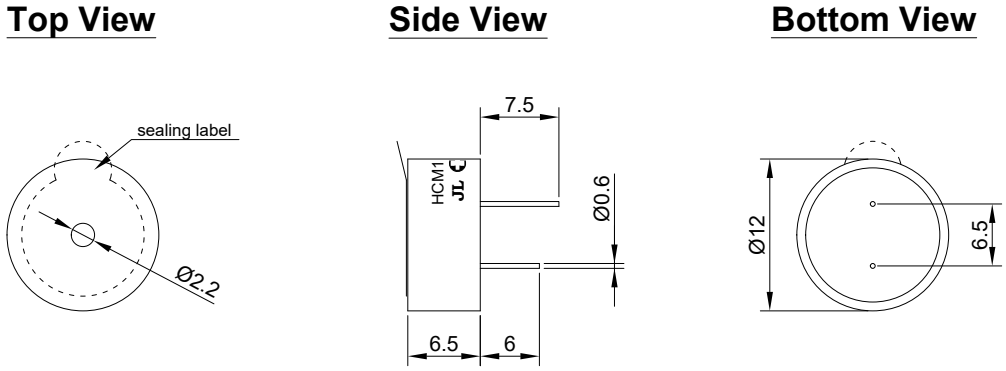

Figure 4. HCM1205F Mechanical Layout

8. Standard Packing Requirements

8.1. Packing Quantity : 100 pieces per tray 10 trays per unit, 3 units per carton
(Total 3000 pieces)

8.2. Carton Layout

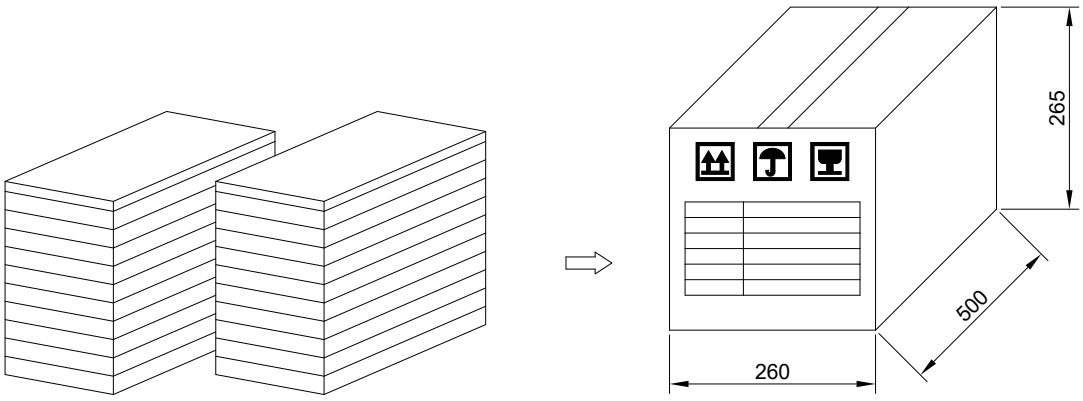

Figure 5. Tray and Carton Layout