BeStar Technologies Inc.
Address: 761 N. 17th Street Unit 4, St. Charles, IL 60174
Tel : 847-261-2850 E-mail : sales@bestartech.com Web : www.bestartech.com

Document Number : 0108-53
Revision : A5
Total Pages : 5
Prepare by : Loki, Lo
Date : 16 November, 2015

SoniCrest Brand Acoustic Components
www.jlsonicrest.com
Document Type : Specification
Product Type : Piezo Sound Generator Component
Part Number : HPA24C

A3 - Updated format & layout by Leo, Sin on 18 Jan., 2007		
A4 - Updated section 4 - 6 by Loki, Lo on 20 Mar., 2014		
A5 - Updated packing by Loki, Lo on 16 Nov., 2015		

This material is the property of BeStar Technologies Inc.
Unauthorized copying or use of this material is prohibited.

1. Purpose and Scope

This document contains both general requirements, qualification requirements, and those specific electrical, mechanical requirements for this part.

2. Description

Ø24mm piezo sound generator, RoHS compliant.

3. Application

Telecommunication Equipment, Computers and Peripherals, POS System, Portable Equipment, etc.

4. Component Requirement

4.1. General Requirement

4.1.1.	Operating Temperature Range	: -30°C to +70°C
4.1.2.	Storage Temperature Range	: -40°C to +85°C
4.1.3.	Housing Material	: Noryl
4.1.4.	Weight	: Approx. 1.9

4.2. Electrical Requirement

4.2.1.	Rated Voltage	: 15Vp-p
4.2.2.	Operating Voltage	: 1 ~ 30Vp-p
4.2.3.	Rated Current	: <=8mA
4.2.4.	Capacitance	: 18 ± 30% nF
4.2.5.	Sound Pressure level at 10cm (Applying rated voltage)	: >=90dB
4.2.6.	Generated Frequency	: 5500 ± 700 Hz

4.3. Mechanical Requirement

4.3.1.	Layout and Dimension	: See Section 6, Figure 2

4.4. Test Setup

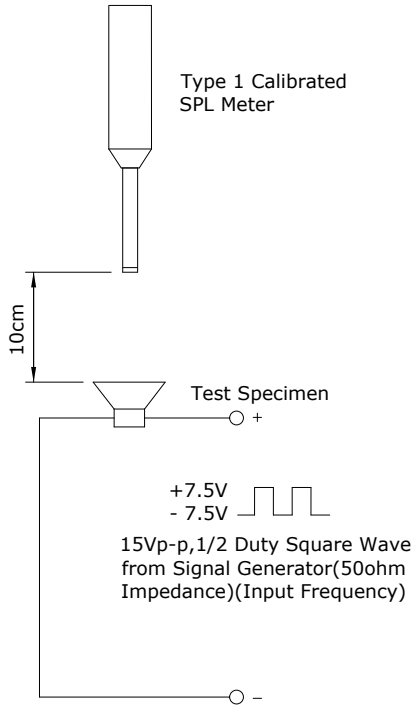

Figure 1. Test Setup

Notes : Apply 15Vp-p, set 5500Hz from Signal Generator. Measure SPL using a calibrated SPL meter 10cm from the alert port. Sound level meter to be in accordance with IEC651 (1979) Type 1 and/or ANSI S1.4-1983. The meter must be checked on a daily basis using a calibrated acoustic calibrator recommended by the manufacturer. Measurement should be carried out in a free field environment or at least 40cm from any surface.

5. Reliability Test

5.1. High Temperature : Subject samples to +85 ± 2°C for 48 hours. Components must be fully stabilized at temperature extremes before data is taken, which may require up to a 2 hours soak.

5.2. Low Temperature : Subject samples to -40 ± 2°C for 48 hours. Components must be fully stabilized at temperature extremes before data is taken, which may require up to a 2 hours soak.

5.3. Static Humidity : Subject samples to +40 ± 2°C with 90%~95% relative humidity for 24 hours. Finally dry at room ambient for 4 hours before taking final measurement.

6. Mechanical Layout

Unit : mm
Tolerance : Linear XX.X = ±0.3
XX.XX = ±0.05
Angular = ±0.25°
(unless otherwise specified)

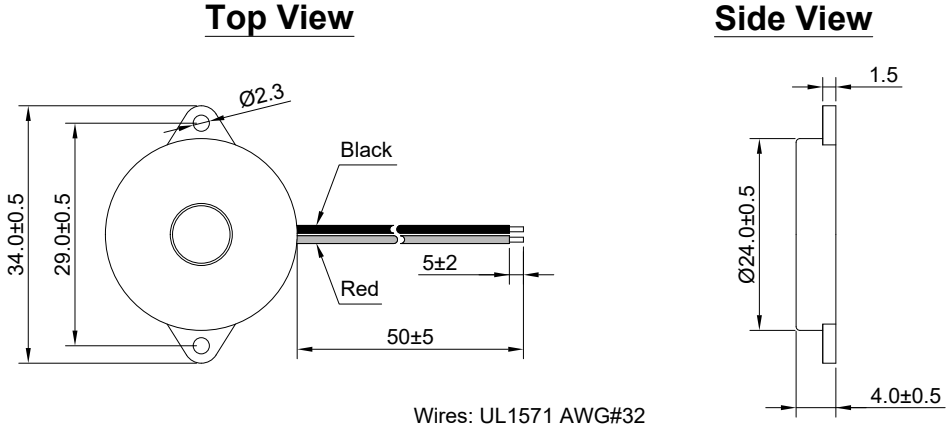

Figure 2. HPA24C Mechanical Layout

7. Standard Packing Requirements

7.1. Packing Quantity : 100 pieces per tray, 10 trays per unit, 1 unit per carton (Total 5000 pieces)

7.2. Net Weight : 2Kg

7.3. Gross Weight : 3Kg

7.4. Carton Layout

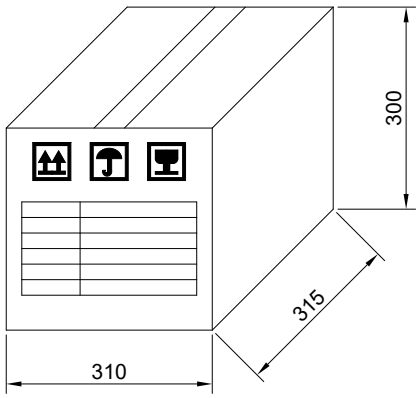

Figure 3. Tray and Carton Layout