BeStar Technologies Inc.
Address: 761 N. 17th Street Unit 4, St. Charles, IL 60174
Tel : 847-261-2850 E-mail : sales@bestartech.com Web : www.bestartech.com

Document Number : 9703-34
Revision : A9
Total Pages : 6
Prepare by : Loki, Lo
Date : 21 March, 2013

SoniCrest Brand Acoustic Components
www.jlsonicrest.com
Document Type : Specification
Product Type : Piezo Sound Generator Component
Part Number : HPM14AX

A7 - update format and layout by Loki, Lo on 18 Oct., 2012		
A8 - update section 4 - 7 by Loki, Lo on 23 Jan., 2013		
A9 - update electrical requirement by Loki, Lo on 21 Mar., 2013		

This material is the property of BeStar Technologies Inc.
Unauthorized copying or use of this material is prohibited.

1. Purpose and Scope

This document contains both general requirements, qualification requirements, and those specific electrical, mechanical requirements for this part.

2. Description

Ø14mm piezo sound generator, RoHS compliant.

3. Application

Computers and Peripherals, Portable Equipment, Automobile Electronics, etc.

4. Component Requirement

4.1 General Requirement

4.1.1.	Operating Temperature Range	: -20°C to +70°C
4.1.2.	Storage Temperature Range	: -30°C to +80°C
4.1.3.	Weight	: Approx. 1g

4.2 Electrical Requirement

4.2.1.	Rated Voltage (DC)	: 12V
4.2.2.	Operating Voltage	: 3V to 16V
4.2.3.	Rated Current (applying Rated Voltage)	: <=10mA
4.2.4.	Sound Pressure Level at 10cm	: >=80dB
4.2.5.	Generated Frequency (applying Rated Voltage)	: 4000 ± 500Hz

4.3 Mechanical Requirement

4.3.1.	Layout and Dimension	: See Section 6, Figure 3

4.4 Test Setup of SPL and Frequency Measurement

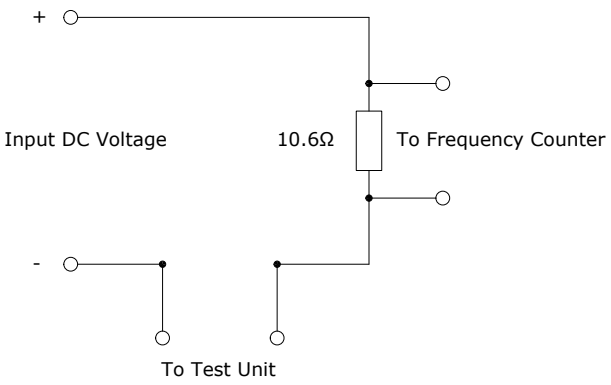

Figure 1. Frequency Testing Circuit

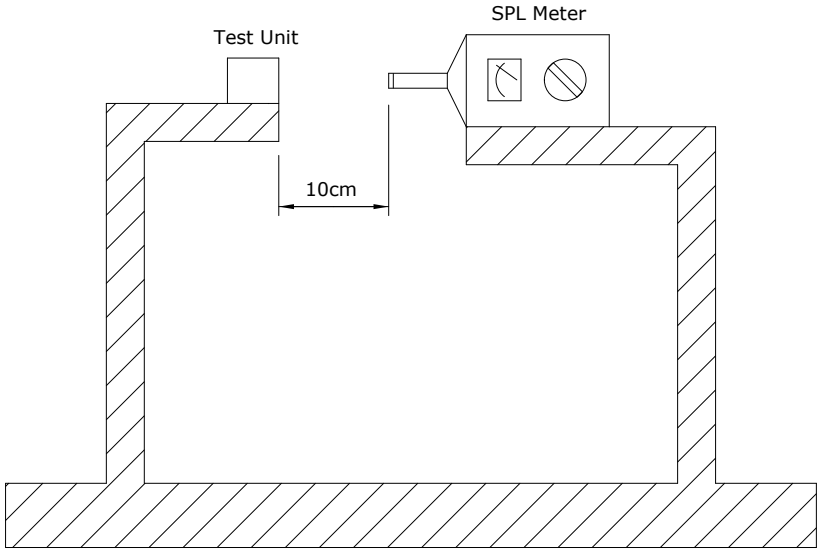

Figure 2. SPL Inspection Test Setup

Notes : Input 12V DC into samples. Measure SPL using a calibrated SPL meter 10cm from the alert port. Sound level meter to be in accordance with IEC651 (1979) Type 1 and/or ANSI S1.4-1983. The meter must be checked on a daily basis using a calibrated acoustic calibrator recommended by the manufacturer. Measurement should be carried out in a free field environment or at least 40cm from any surface.

5. Reliability Test

5.1. Opeating Life : Subject samples to room condition for 1000 hours with rated voltage and frequency. Components must be fully stabilized before data is taken, which may require up to a 2 hours soak.

5.2. High Temperature : Subject samples to +80°C for 96 hours. Components must be fully stabilized at temperature extremes before data is taken, which may require up to a 2 hours soak.

5.3. Low Temperature : Subject samples to -30°C for 96 hours. Components must be fully stabilized at temperature extremes before data is taken, which may require up to a 2 hours soak.

5.4. Temperature Cycle : Each temperature cycle shall consist of 30 minutes at -20°C, 15 minutes at +20°C, 30 minutes at +70°C and 15 minutes at +20°C. Test duration is for 5 cycles. Components must be fully stabilized at temperature extremes before data is taken, which may require up to a 2 hours soak.

5.5. Humidity Cycle : Each humidity cycle shall consist of 10 hours at +25°C 90~95% relative humidity and 12 hours at +65°C 90~95% relative humidity. Test duration is for 5 cycles. Finally dry at room ambient for 2 hours before taking final measurement.

5.6. Drop Test : Drop samples naturally from the height of 70cm onto a wooden board (10mm thickness) 3 directions.

5.7. Solderability Test : Temperature at 255 ± 10 °C for 30 seconds.

6. Mechanical Layout

Unit : mm
Tolerance : Linear XX.X = ±0.3
XX.XX = ±0.05
Angular = ±0.25°
(unless otherwise specified)

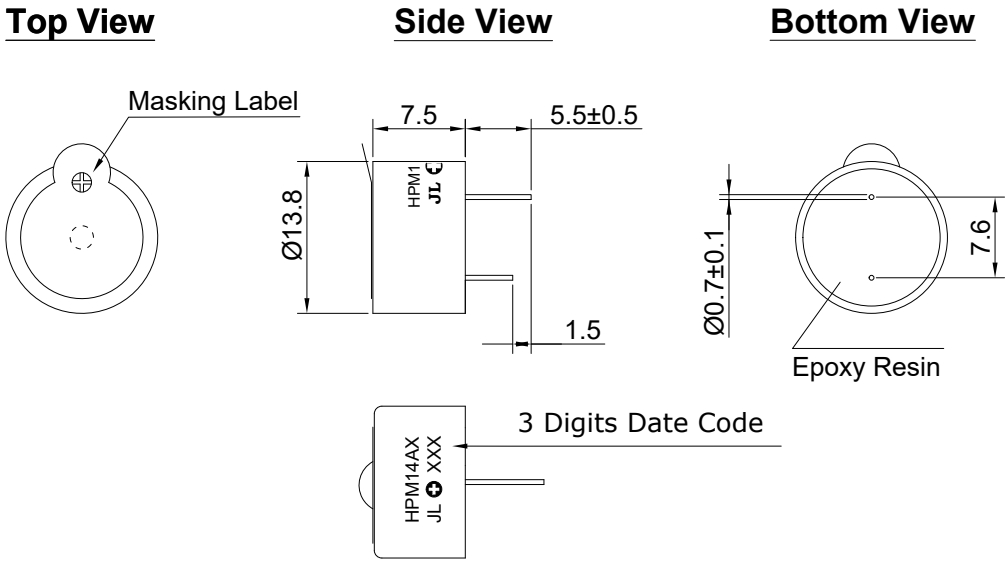

Figure 3. HPM14AX Mechanical Layout

7. Standard Packing Requirements

7.1. Packing Quantity : 100 pieces per tray, 30 trays per carton
(Total 3000 pieces)

7.2. Tray & Carton Layout

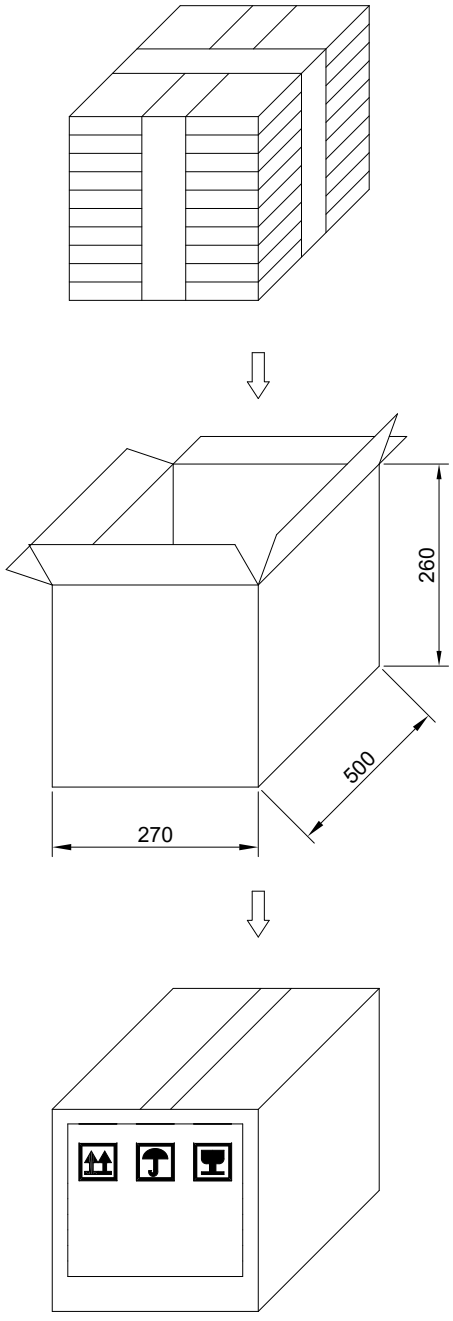

Figure 4. Tray and Carton Layout