BeStar Technologies Inc.
Address: 761 N. 17th Street Unit 4, St. Charles, IL 60174
Tel : 847-261-2850 E-mail : sales@bestartech.com Web : www.bestartech.com

Document Number : 1109-23
Revision : A2
Total Pages : 6
Prepare by : Loki, **Lo**
Date : 5 December, 2013

SoniCrest Brand Acoustic Components
www.jlsonicrest.com
Document Type : Specification
Product Type : Speaker Sound Generator Component
Part Number : HSP2040D-8

A1 - New issue created by Holmes, Poon on 5 Sept., 2011		
A2 - Updated Mechanical Layout by Loki, Lo on 5 Dec., 2013		

This material is the property of BeStar Technologies Inc.
Unauthorized copying or use of this material is prohibited.

1. Purpose and Scope

This document contains both general requirements, qualification requirements, and those specific electrical, mechanical requirements for this part.

2. Description

20 x 40 x 5.8 mm speaker sound generator, RoHS compliant.

3. Application

Telecommunication Equipment, Computers and Peripherals, etc.

4. Component Requirement

4.1. General Requirement

4.1.1. Operating Temperature Range : -30°C to +70°C

4.1.2. Storage Temperature Range : -40°C to +85°C

4.1.3. Weight : Approx. 7.6g

4.2. Electrical Requirement

4.2.1. Coil Impedance : 8 ± 15% Ω

4.2.2. Rated Power : 2W

4.2.3. Maximum Input Power : 2.5W

4.2.4. Resonancce Fequency : 650 ± 20% Hz

4.2.5. Frequency Range : f_0 ~ 20KHz

4.2.6. Sound Pressure Level at 0.1m, 0.1W (0.8, 1.0, 1.2, 1.5KHz average) : 90 ± 3 dB

4.2.7. Total Harmonic Distortion at 1KHz, 1V : <=5%

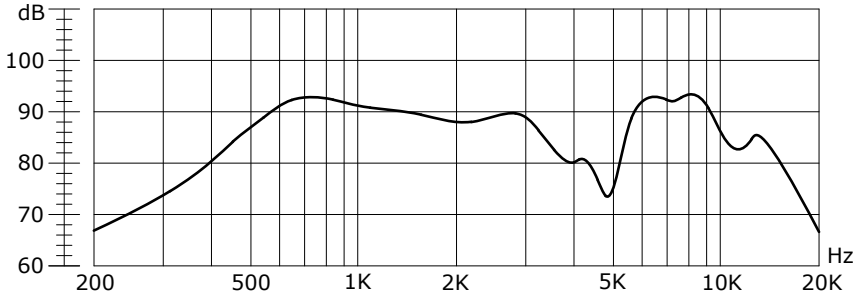

Figure 1. Frequency Response

4.3. Mechanical Requirement

4.3.1. Layout and Dimension : See Section 6, Figure 3

4.4. Test Setup

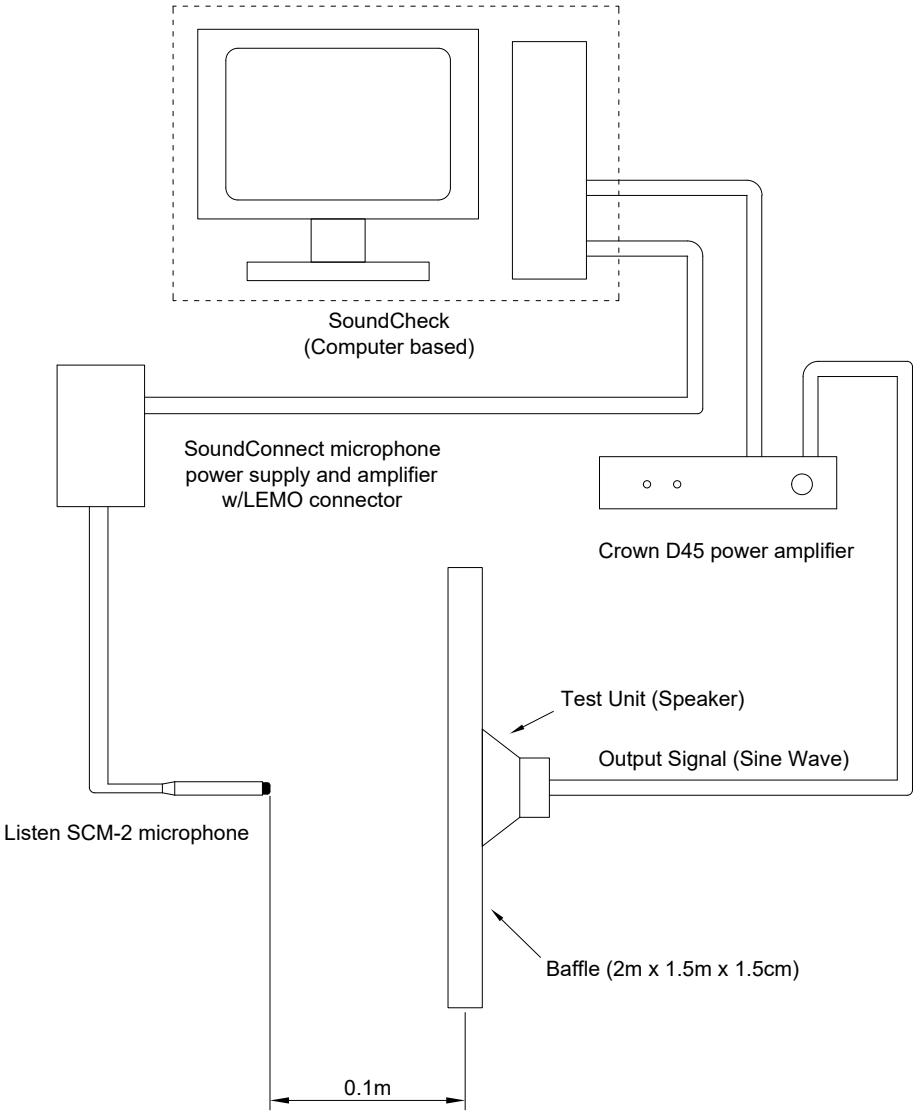

Figure 2. Test setup

Notes : Apply rated signal from Crown D45 Power Amplifier. Measure SPL with microphone 0.1m from the test unit with baffle (2m x 1.5m x 1.5cm). Microphone to be in accordance with Listen SCM-2 Microphone. The microphone should be calibrated on a daily basis using an acoustic calibrator recommended by the manufacturer. Measurement should be carried out in a free field environment.

5. Reliability Test

5.1. High Temperature : Subject samples to +85±3°C and operate for 96 hours. Components must be fully stabilized at temperature extremes before data is taken, which may require up to a 3 hours soak.

5.2. Low Temperature : Subject samples to -40±3°C and operate for 96 hours. Components must be fully stabilized at temperature extremes before data is taken, which may require up to a 3 hours soak.

5.3. Temperature Shock : Each temperature cycle shall consist of 18 minutes at 85°C and 18 minutes at 25°C. Test duration is for 20 cycles. Components must be fully stabilized at temperature extremes before data is taken, which may require up to a 2 hours soak.

5.4. Static Humidity : Precondition at room temperature for 1 hour. Then expose to +70±3°C with 80 ~ 85% relative humidity for 48 hours. Finally dry at room ambient for 3 hours before taking final measurement.

5.5. Drop Test : Drop samples naturally from the height of 150cm onto a 20mm thickness wooden board in 3 directions for 6 times.

5.6. Load Test : Subject samples to room condition for 96 hours under rated power, white noise. Components must be fully stabilized before data is taken, which may require up to a 3 hours soak.

5.7. Random Vibration : Secure samples. Vibrated randomly 10 ~ 55Hz with 1.5mm peak amplitude in 3 directions (x, y and z). The test duration is 2 hours per plane.

5.8. Terminal Strength : Apply 1kg load to samples for 15 seconds in axial direction (2 terminals).

5.9. Maximum Power : Each cycle shall consist of 1 minute ON and 2 minutes OFF under maximum power. Test duration is for 10 cycles.

6. Mechanical Layout

Unit : mm
Tolerance : Linear XX.X = ±0.3
XX.XX = ±0.05
Angular = ±0.25°
(unless otherwise specified)

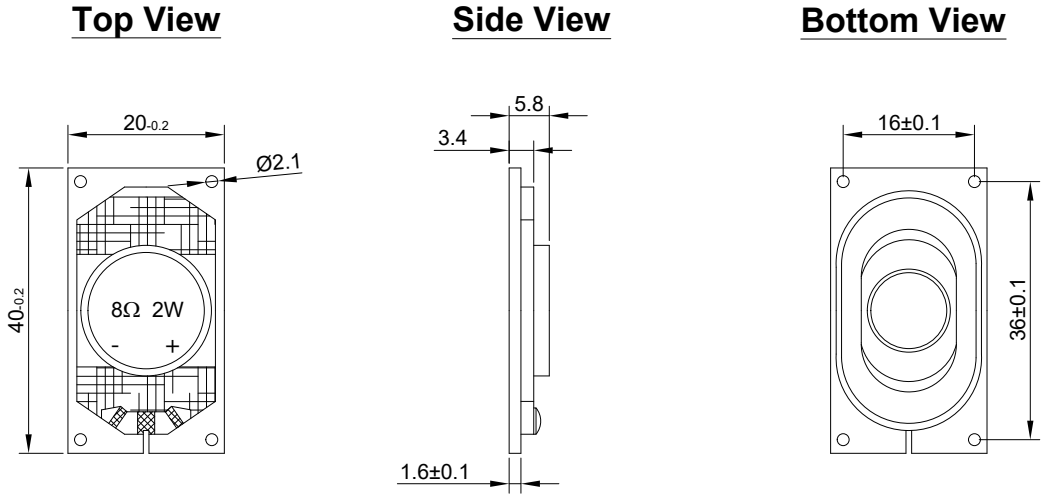

Figure 3. HSP2040D-8 Mechanical Layout

7. Standard Packing Requirements

7.1. Packing Quantity : 40 pcs per tray, 25 trays per carton (Total 1000 pieces).

7.2. Carton Size : 415 x 340 x 305 mm

7.3. Tray Layout

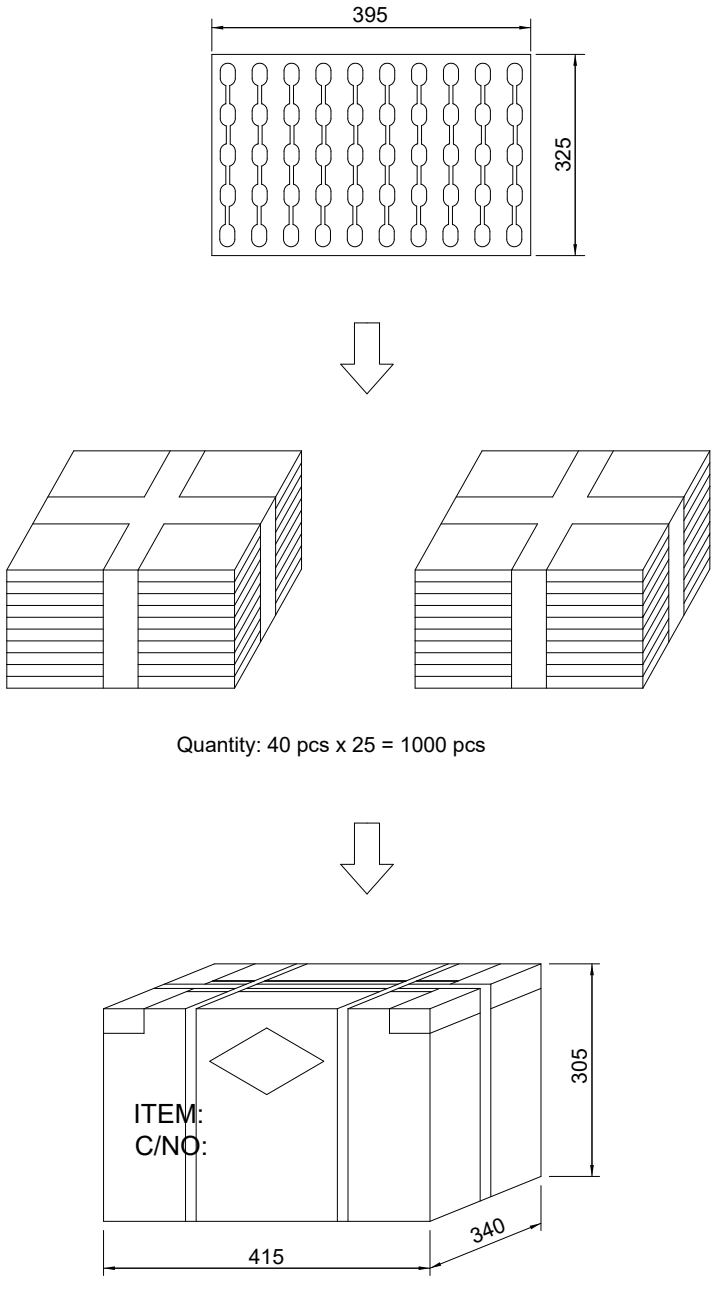

Figure 4. Tray and Carton Layout