| | | | | |
|---|---|---|---|---|
| BeStar | SPECIFICATION FOR PIEZO ELECTRIC ALARM | | | |
| | TOTAL PAGE | 06 | www.bestargroups.com | RoHS |

| | | | |
|---|---|---|---|
| Customer | | Model Name | HUSmart-01A |
| Customer P/N | | Product No. | 119300 |
| Date | 07 Nov. 2008 | Issue No. | BS/TEA01.165A |
| Page | 01 of 06 | Issue Date | 08/11/07 |

## Approval：


1.Description
2.Technical Terms
3.Test Method
4.Drawing
5.Reliability Test
6.Packing
7.History Change Record


| Drawn by | Checked by | Approved by | Customer approved |
|---|---|---|---|
| 张尚君 | 陈小东 | 程久生 | |


*BESTAR HOLDING CO.,LTD*

No.199 HuangHe West Road,New district,ChangZhou,JiangSu Province,P.R.China

***Tel:*** +86 519 88222567 ***Fax:*** +86 519 88222551

***E-mail:***wu@be-star.com ***http://www.bestargroups.com***

# HUSmart-01A



## 1.Description

Smart alarm's speaker switcher to "listen" mode.
So that the unit can alarm as humanity the unit
can measure the surrounding sound pressure level,and it can
automatically adjust ,It's own volume output either up or down.
So as to maintain just 5~10dB louder,loud enough to be heard,
but not so loud as to cause an unnecessary disturbance.

The unit can work not only in medium noise environment but also in quieter areas.
Can be used as reverse alarm far loading shovels,Road rolles,Forklift trucks,
Dump trucks...

## 2.Technical Terms

| No. | Type | Specifications |
|---|---|---|
| 1. | Rated Voltage(DC) | 12- 24V |
| 2. | Operating Voltage(DC) | 9-28V |
| 3. | Current Consumption1 | max.300mA |
| 4. | Current Consumption2 | max.400mA |
| 5. | SPL at 1m 12-24V no noise level | 82±5dB |
| 6. | SPL at 1m 12-24V Max.noise level | Min.100dB ( typical 102dB ) |
| 7. | Resonant Frequency | 1000±200Hz |
| 8. | Modulation | pulse tone |
| 9. | ON-OFF-cycles | 60C/M±10 |
| 10. | Temperature Range | -20-+70° C |
| 11. | Housing color | black |
| 12. | IP-rating | IP67 |
| 13. | Wire length | 400± 30mm |

This print and information there in are proprietary to Bestar Electronics Industry Co., Ltd. and shall not be used in whole or in part without its written content

| | | | | | | |
|---|---|---|---|---|---|---|
| | | | | Date: | 08/11/07 | HUSmart-01A |
| | | | | Drawn by: | 张尚君 | |
| A | 08/11/07 | 张尚君 | | Checked by: | 陈小东 | SMART ALARM |
| Rev. | Date | Drawn | Note | Approved by: | 程久生 | |
| BESTAR HOLDING CO.,LTD www.bestargroups.com wu@be-star.com | | | | | | DRG NO:BS/TEA01.165A / Page:02 of 06 |

# HUSmart-01A

## 3.Test Method

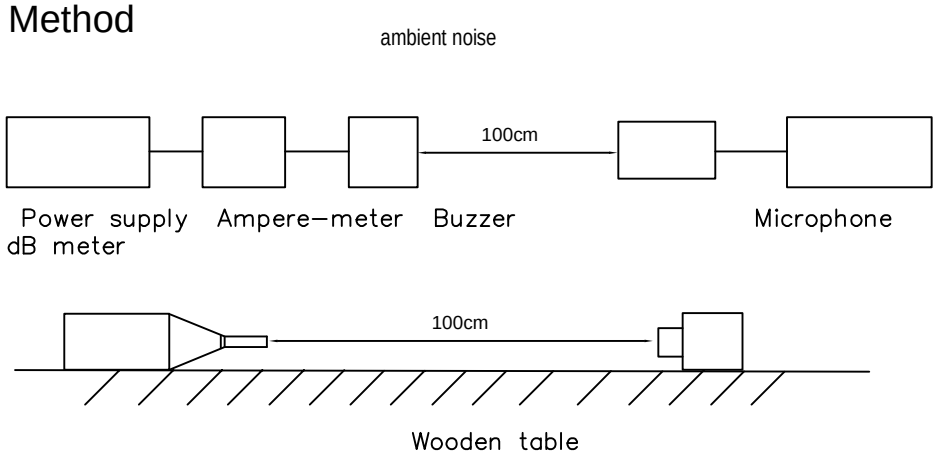


## 4.Drawing

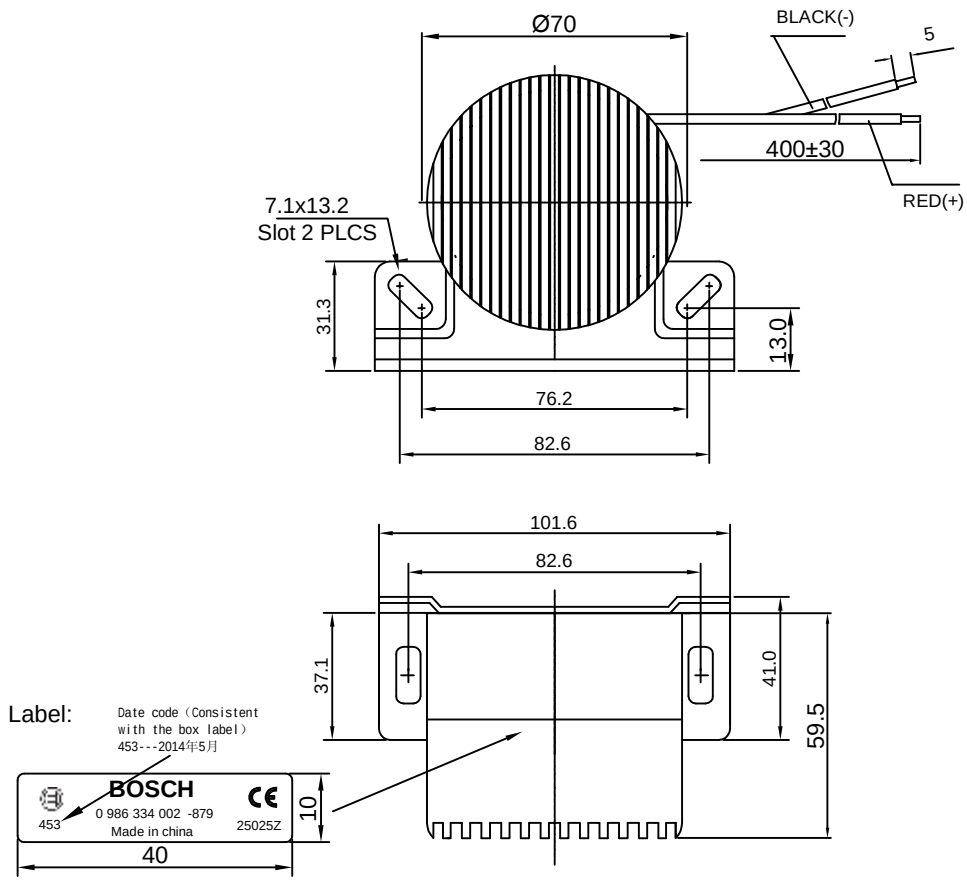


This print and information there in are proprietary to Bestar Electronics Industry Co., Ltd. and shall not be used in whole or in part without its written content

| | | | | | | |
|---|---|---|---|---|---|---|
| | | | | Date: | 08/11/07 | HUSmart-01A |
| | | | | Drawn by: | 张尚君 | |
| A | 08/11/07 | 张尚君 | | Checked by: | 陈小东 | SMART ALARM |
| Rev. | Date | Drawn | Note | Approved by: | 程久生 | |
| BESTAR HOLDING CO.,LTD | | | | www.bestargroups.com wu@be-star.com | | DRG NO:BS/TEA01.165A / Page:03 of 06 |

# HUSmart-01A

## 5.Reliability Test

5.1 Low Temperature Test
Temperature -20°C
Duration 98h
5.2 Heigh Temperature Test
Temperature +70°C
Duration 98h
5.3 Humidity Withstanding
Temperature 40°C
Humidity 95%RH
Duration 98h
5.4 Durability
Testing after 500hours actural continuous operation
5.5 Shock withstanding
High 75cm
Direction 3
5.6 Durability Testing 1000h actual continuous operation

Notice: No abnormality shall exist

This print and information there in are proprietary to Bestar Electronics Industry Co., Ltd. and shall not be used in whole or in part without its written content

| | | | | | | |
|---|---|---|---|---|---|---|
| | | | | Date: | 08/11/07 | HUSmart-01A |
| | | | | Drawn by: | 张尚君 | |
| A | 08/11/07 | 张尚君 | | Checked by: | 陈小东 | SMART ALARM |
| Rev. | Date | Drawn | Note | Approved by: | 程久生 | |
| BESTAR HOLDING CO.,LTD www.bestargroups.com wu@be-star.com | | | | | | DRG NO:BS/TEA01.165A / Page:04 of 06 |

# HUSmart-01A

## 6. Packing

6.1 Packing quantity: 50 pcs per carton
Box Size: 102x73x102(mm)
Carton Size: 54x38.5x22.5(cm)

6.2 Packing Drawing

Box label(70*50mm):

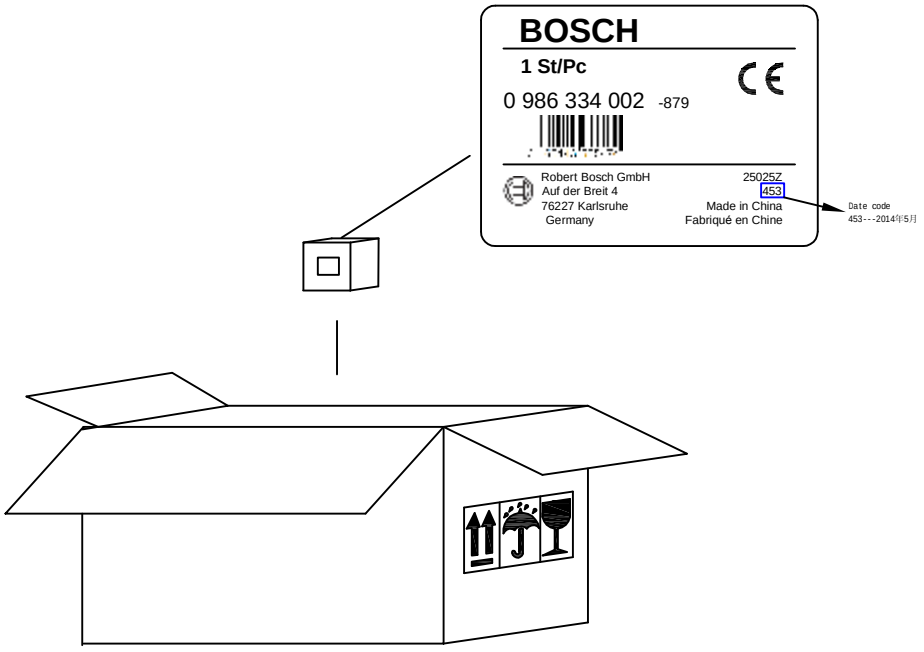


6.3 Packing Content

1×PE-Bag With -2×Butt-Joint
-2×M6 Screw & Nut
-4×M6 Retaining Ring
-2×M8 Screw & Nut
-4×M8 Retaining Ring

| | | | | | | |
|---|---|---|---|---|---|---|
| | | | | Date: | 08/11/07 | HUSmart-01A |
| | | | | Drawn by: | 张尚君 | |
| A | 08/11/07 | 张尚君 | | Checked by: | 陈小东 | SMART ALARM |
| Rev. | Date | Drawn | Note | Approved by: | 程久生 | |
| BESTAR HOLDING CO.,LTD www.bestargroups.com wu@be-star.com | | | | | | DRG NO:BS/TEA01.165A / Page:05 of 06 |

This print and information there in are proprietary to Bestar Electronics Industry Co., Ltd. and shall not be used in whole or in part without its written content

# HUSmart-01A

## 7. History Change Record

| version No. | Change Items | | Date | Drawn | Approved |
|---|---|---|---|---|---|
| | Before | After | | | |
| A | Original edition | | 08/11/07 | 张尚君 | 程久生 |
| | | | | | |
| | | | | | |
| | | | | | |
| | | | | | |
| | | | | | |
| | | | | | |
| | | | | | |
| | | | | | |
| | | | | | |
| | | | | | |
| | | | | | |
| | | | | | |
| | | | | | |
| | | | | | |
| | | | | | |

This print and information there in are proprietary to Bestar Electronics Industry Co., Ltd. and shall not be used in whole or in part without its written content

| | | | | | | |
|---|---|---|---|---|---|---|
| | | | | Date: | 08/11/07 | HUSmart-01A |
| | | | | Drawn by: | 张尚君 | |
| A | 08/11/07 | 张尚君 | | Checked by: | 陈小东 | SMART ALARM |
| Rev. | Date | Drawn | Note | Approved by: | 程久生 | |
| BESTAR HOLDING CO.,LTD www.bestargroups.com wu@be-star.com | | | | | | DRG NO:BS/TEA01.165A / Page:06 of 06 |