BeStar Technologies Inc.
Address: 761 N. 17th Street Unit 4, St. Charles, IL 60174
Tel : 847-261-2850 E-mail : sales@bestartech.com Web : www.bestartech.com

Document Number : 1006-52
Revision : A5
Total Pages : 11
Prepare by : Loki, **Lo**
Date : 18 December, 2017

SoniCrest Brand Acoustic Components

www.jlsonicrest.com

Document Type : Specification
Product Type : Silicon Digital Microphone Component
Part Number : SDMO03A-26

A1 - New issue created by Ting Lok, Ngan on 18 Jan., 2011	A5 - Updated section 4, 5, 8 - 10 by Loki, Lo on 18 Dec., 2017	
A2 - Updated section 4 - 10 by Loki, Lo on 10 Sept., 2014		
A3 - Added frequency response by Ting Lok, Ngan on 25 Feb., 2015		
A4 - Updated section 2, 4 and 10 by Loki, Lo on 15 Mar., 2017		

This material is the property of BeStar Technologies Inc.
Unauthorized copying or use of this material is prohibited.

1. Purpose and Scope

This document contains both general requirements, qualification requirements, and those specific electrical, mechanical requirements for this part.

2. Description

3.76 x 4.25 x 1.25mm digital silicon microphone with N1 Sensor and C1 ASIC, top mount, RoHS compliant.

3. Application

Telecommunication Equipment, Computers and Peripherals, etc.

4. Component Requirement

4.1. General Requirement

Specification	Min.	Typ.	Max.	Unit
Operating Temperature	-40	-	100	°C
Storage Temperature	-40	-	125	°C
Relative Humidity	25	-	85	%
Operating Voltage	1.64	2.1	3.6	V

4.2. Electro Acoustical Specifications

Specification	Min.	Typ.	Max.	Unit
Directivity		Omni-directional		
Maximum Input Sound Level at 1kHz, 10% THD		120		dB
Total Harmonic Distortion at 94dB SPL, 1kHz	-	-	0.5	%
Sensitivity Range (0dB = 1V/Pa)	-29	-26	-23	dBFS
Current Consumption at 2.1VDC in normal mode without the I/O buffer current	-	650	800	μA
Current consumption in SLEEP mode	-	-	50	μA
Solder Reflow (for 30s max. of peak temperature)	-	-	260	°C
Signal to Noise Ratio (A-weighted) at 94dB SPL, 1kHz	-	58	-	dBA
Power Supply Rejection (PSR) at 217Hz 100mVpp Square wave	-	-70	-	dBFS
Load Capacitance for DATA output	-	-	100	pF
Sensitivity Variation over Operating Voltage Range	-	0.5	-	dB
Date Format		1/2 cycle PDM		
Clock Frequency	1.0	2.4	3.25	MHz
Clock Duty Cycle	40	-	60	%
Logic Low Input/Output Voltage	-0.35	-	0.35* V_{DD}	V
Logic High Input/Output Voltage	0.65* V_{DD}	-	V_{DD} +0.3	V
Short Circuit Current	1	-	10	mA

4.3. Interface Timing Chart

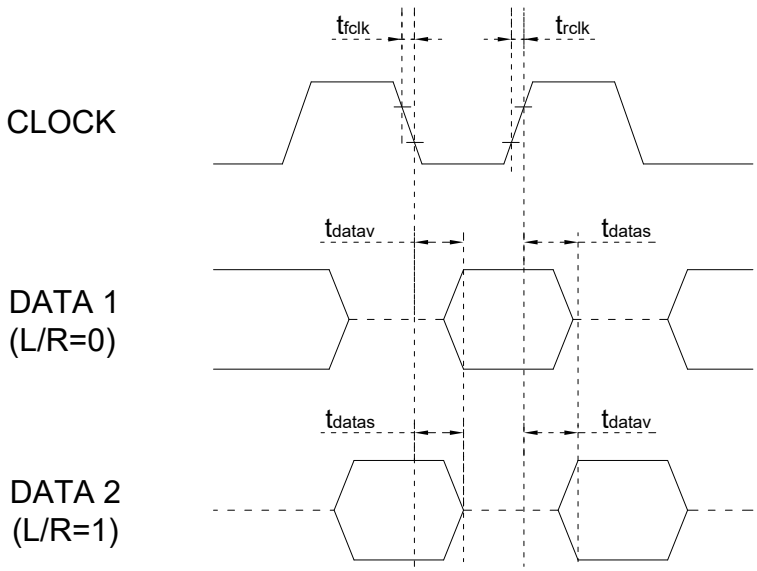

Figure 1. Interface Timing Chart

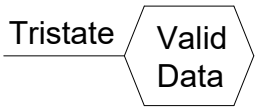

Figure 2. Data Format

Notes : Tristate logic has 3 states logic 1, logic 0 and high impedance state when the pin is not driven. During the high impedance state the pin will float and any other driver with logic 1 or 0 will drive the pin to its logic state if connected to the pin. This is used to share the DATAOUT pin between L & R. Device with L/R = 1 would drive the DATAOUT pin when the clock is high and put the output in high impedance state (tristate) when CLOCK = LOW. Device with L/R = 0 would drive the DATAOUT pin when CLOCK = LOW and make its output high impedance for CLOCK = HIGH.

DATA1 = RIGHT Sensor = L/R = 0
DATA2 = LEFT Sensor = L/R = 1

Parameter	Comments	Min.	Typ.	Max.	Unit
T_{fclk}	Fall time	-	-	10	ns
T_{rclk}	Rise time	-	-	10	ns
T_{datav}	Time for Valid Data	20	31	40	ns
T_{datas}	Delay Time for Data Tristate	0	8	15	ns

4.4. Frequency Response

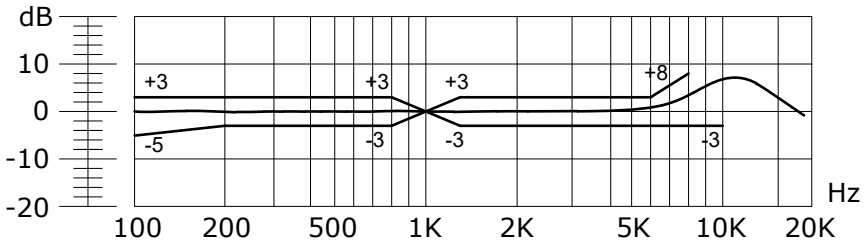

Figure 3. Frequency Response

5. Interface Circuit Design Considerations

5.1. Typical Application Schematics

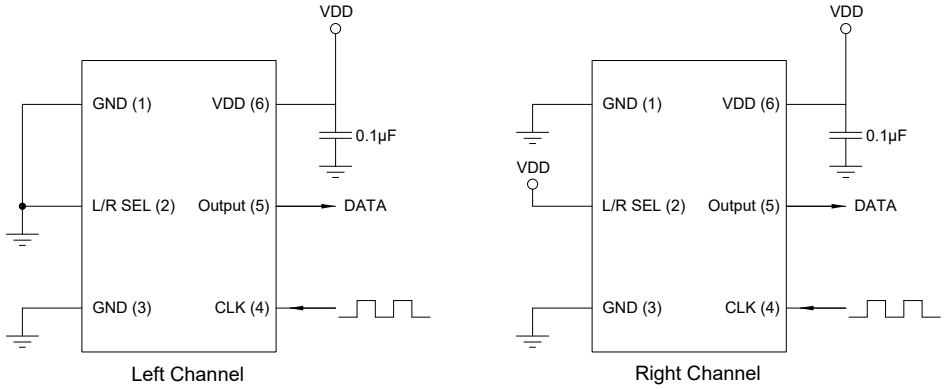

Figure 4. Typical Application Schematics

5.2. Electrical Layout

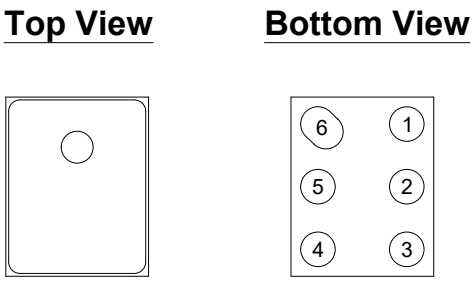

Pin No.	Function	Comments
1	GND	Ground
2	LR SEL	Selection Control
3	GND	Ground
4	CLOCK	Clock Input
5	Output	Output Signal
6	VDD	VDD Input

Figure 5. Electrical Layout of SDMO03A-26

5.3. Terminology

5.3.1. GND 1: The Terminal where the supply negative (Pad name "GND" in Electrical layout drawing) is connected to sensor package.

5.3.2. LR SEL 2: Clock polarity for sampling the output determined by the L/R signal.

5.3.3. GND 3: The Terminal where the supply negative (Pad name "GND" in Electrical layout drawing) is connected to sensor package.

5.3.4. CLOCK 4: The clock input terminal (CLK is from CODEC to pressure sensor Clk Input).

5.3.5. Output 5: The Output Terminal, where the electrical signal equivalent to applied pressure is available (Pad name "Output" in Electrical Layout Drawing).

5.3.6. VDD: Input Voltage (Max. 3.6V).

5.3.7. DIRECTIVITY: It is the response pattern that expresses the geometric shape of the region of sensitivity surrounding the pressure sensor, omni-directional, uni-directional, bi-directional.

6. Reliability Test

6.1. Reliability Test Requirements

6.1.1. **Solder Reflow** : One pass through standard solder reflow profile.

6.1.2. **Temperature Shock** : Each cycle shall consist of 30 minutes at -40°C, 30 minutes at +125°C with a 5 minutes transition time. Test duration is for 30 cycles, starting from cold to hot temperature.

6.1.3. **Static Humidity** : Precondition at +25°C for 1 hour. Exposed to +85°C with 85% Relative Humidity for 1000 hours. Dry at room ambient for 4 hours before measurements.

6.1.4. **Random Vibration** : Vibrated randomly 20 ~ 2000Hz for 4 cycles with 20g acceleration in each directions. The test time is 30 minutes per plane.

6.1.5. **Mechanical Shock** : Subject samples to half sine shock pulses (3000g for 0.3ms) in each direction, total for 18 shocks.

6.1.6. **Operation Life** : Subject to 125°C for 168 hours under full rated power.

6.1.7. **Simulated Reflow (without solder)** : Samples for qualification testing require a minimum of 3 passes of standard reflow solder profiles. 2 hours of settling time is required between each reflow profile test.

6.1.8. **ESD Sensitivity** : Perform ESD sensitivity threshold measurements for each contact according to MIL-STD-883G, Method 3015.7 for Human Body Model. Identify the ESD threshold levels indicating passage of 8000V Human Body Model.

6.1.9. **Drop Test** : Samples are fixed inside the fixture and dropped naturally from the 1.5m height onto a stell surface in six directions for three times, total 18 times.

7. Recommended reflow oven temperature profile

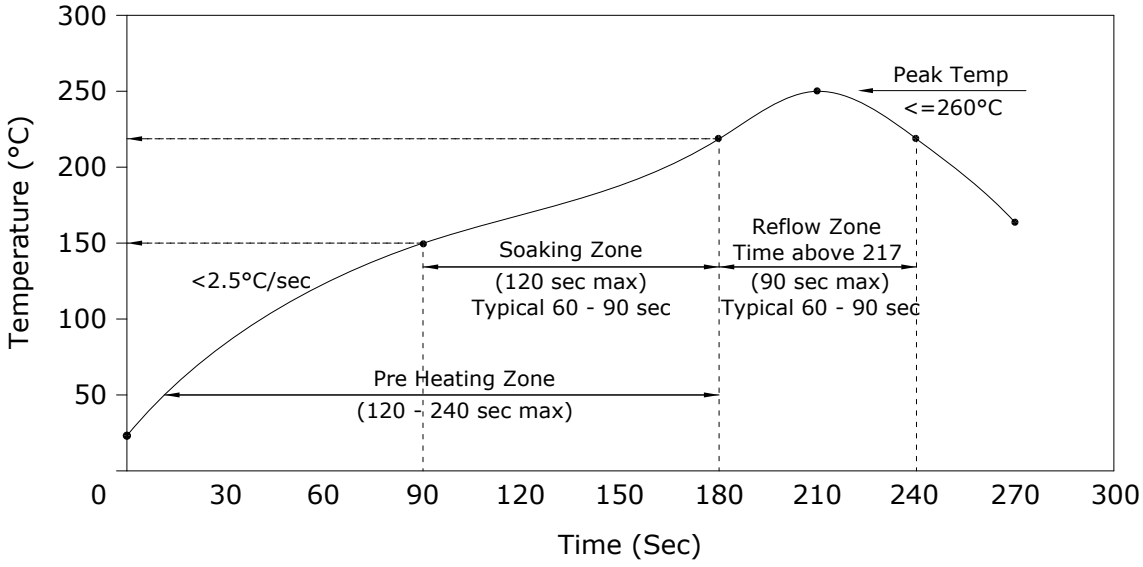

Figure 6. Recommended reflow oven temperature profile

Notes:

1. Pb-free soldering assembing processing: Reference IPC/JEDEC J-STD-020C.
2. Number of Reflows - Recommended not more than 3 cycles.
3. The SMD process should use no clean solder paste, cleaning is not allowed because washing will damage the pressure sensor sensing elements.
4. Do not board wash after the reflow process. Board washing and cleaning can damage the device.
5. Do not expose ultrasonic processing and cleaning.
6. Do not expose plasma cleaning process.

8. Mechanical Requirements

Unit : mm
Tolerance : Linear = ±0.15
(unless otherwise specified)

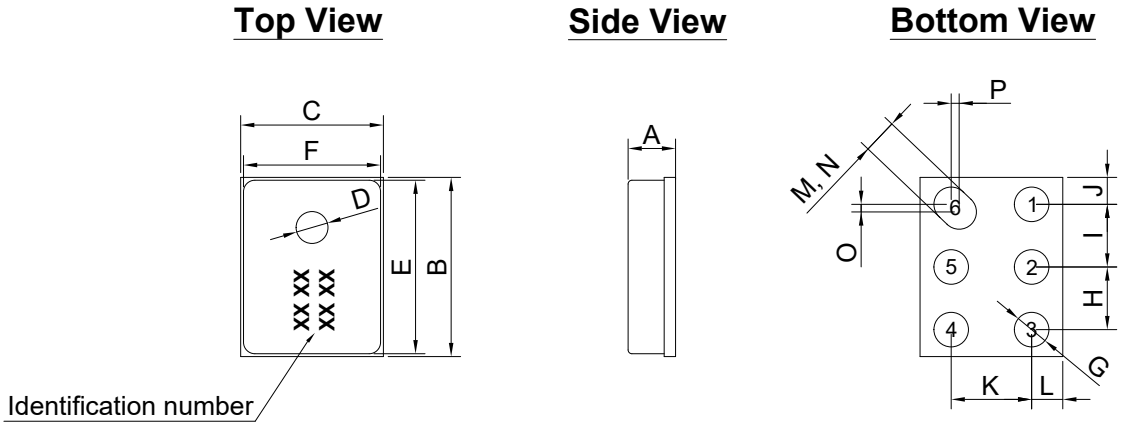

Figure 7. Mechanical Layout of SDMO03A-26

Item	Symbols	Diameter (mm)		
		Minimum	Nominal	Maximum
Height	A	1.14	1.24	1.34
Length	B	4.62	4.72	4.82
Width	C	3.66	3.76	3.86
Acoustic Port Hole Diameter	D	0.79	0.84	0.89
Metal Cap Length	E	4.42	4.52	4.62
Metal Cap Width	F	3.46	3.56	3.66
Terminal Pad 1 to 5 Diameter	G	0.81	0.91	1.01
Terminal Pad Pitch 1	H	1.55	1.65	1.75
Terminal Pad Pitch 2	I	1.55	1.65	1.75
Pad to Unit Edge 1	J	0.61	0.71	0.81
Terminal Pad Pitch 3	K	2.24	2.34	2.44
Pad to Unit Edge 2	L	0.61	0.71	0.81
Pad 6 - M Diameter	M	-	0.91	-
Pad 6 - N Diameter	N	-	0.91	-
Long Edge from Centre Pad øM to øN	O	0.20	0.21	0.22
Short Edge from Centre Pad øM to øN	P	0.20	0.21	0.22

9. PCB Solder Pad Layout

The below figure provide general guidance about the recommended PCB land pattern. The land pattern dimensions are exactly the same size and shape as the pads on the pressure sensor module. Recommended solder paste height is 3-5 mils (75μm to 125μm).

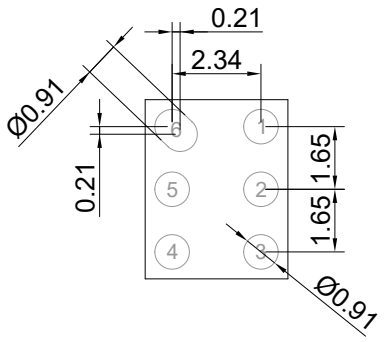

Figure 8. PCB solder pad layout for SDMO03A-26

10. Standard Packing Requirements

10.1. Tape and Reel

10.1.1. Packing Options

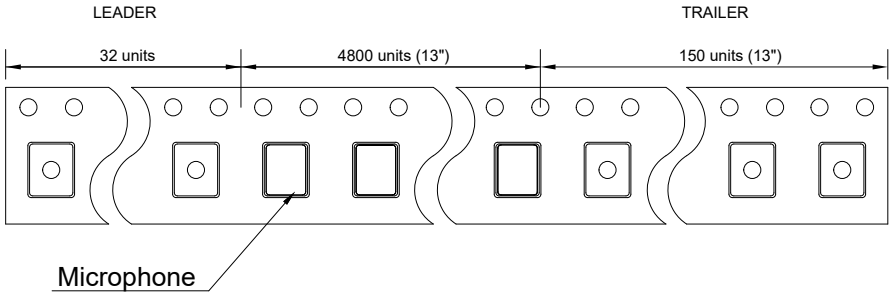

Figure 9. Tape and Reel Packing Quantity

10.1.2. Tape Layout

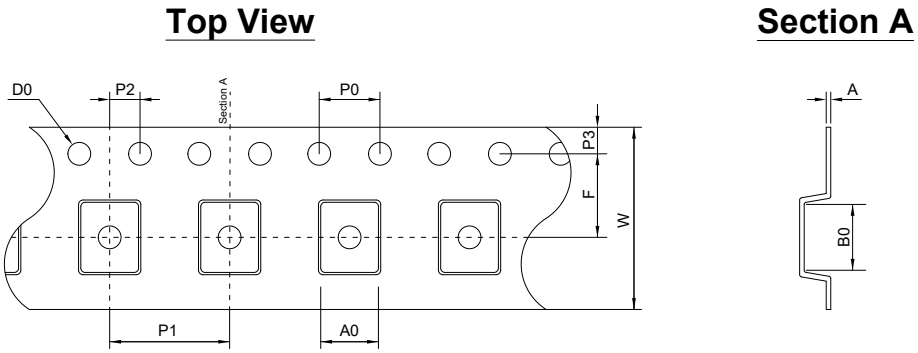

Figure 10. Tape Layout

Symbol	Millimeter		
	MINIMUM	NOMINAL	MAXIMUM
A	0.25	0.30	0.35
A0	4.00	4.10	4.20
B0	5.00	5.10	5.20
øD0	1.50	1.50	1.60
F	5.40	5.50	5.60
P0	3.90	4.00	4.10
P1	7.90	8.00	8.10
P2	1.90	2.00	2.10
P3	1.65	1.75	1.85
W	11.70	12.00	12.30

10.1.3. Reel Layout

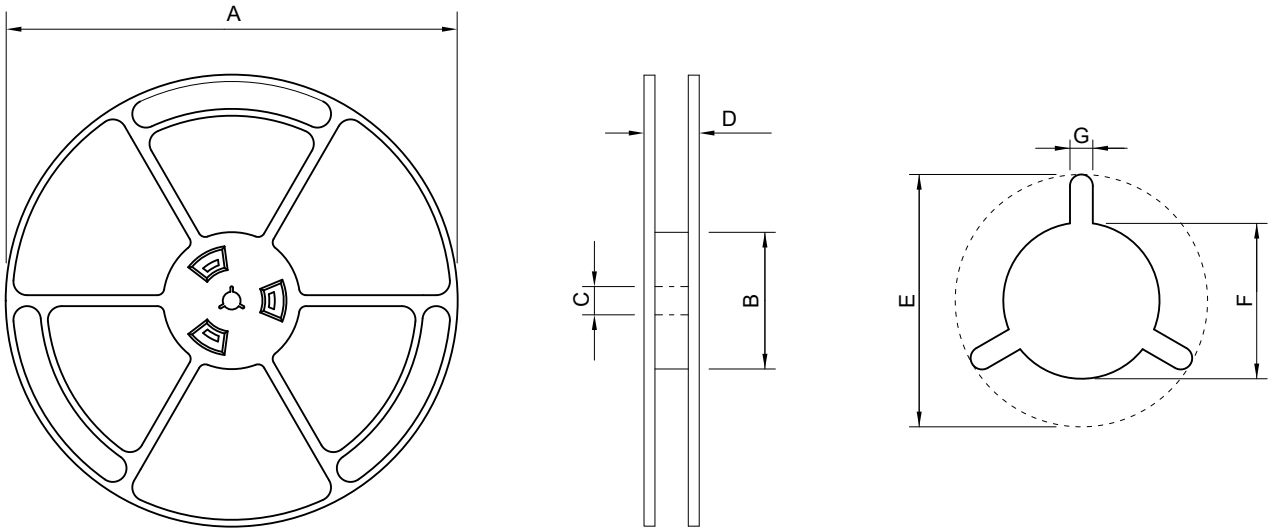

Figure 11. Reel Layout

Item	Symbols	Diameter (mm)		
		Minimum	Nominal	Maximum
Reel Diameter	A	-	330	-
Hub Diameter	B	98	100	102
Hub Hole Diameter	C	12.8	13	13.5
Reel Width (measured at Hub)	D	-	18	18.4
Arbor Hole	E	20.2	-	-
Arbor Hw in mm Diameter	F	12.8	13.0	13.5
Arbor Slot Width	G	1.5	-	-

10.1.4. Reel Installation and Carton Information

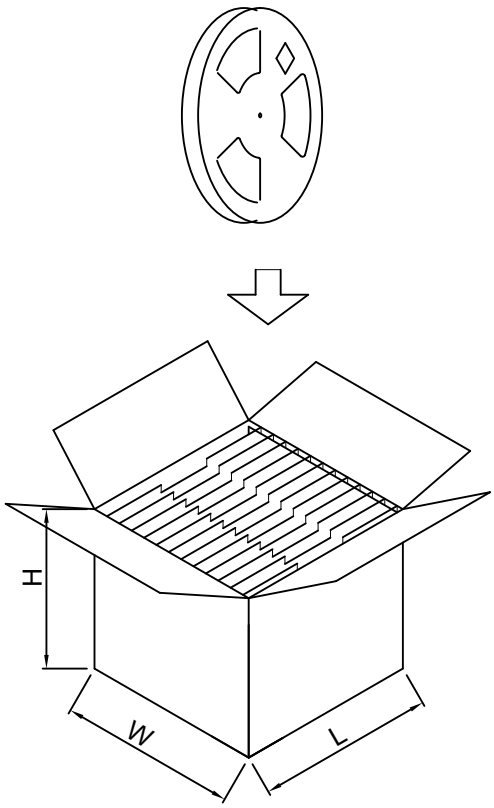

Figure 12. Reel Installation

Qty/reel (pcs)	Weight/reel (kg)	Reel/carton (nos)	Qty/carton (pcs)	Weight full load (kg)	Dimension carton box (LxWxH) mm	Storage (Temp)
4800	0.70	10	48000	~10.00	419 x 276 x 381	-10°C ~ 50°C

10.2. Pickup Tool Pick Location

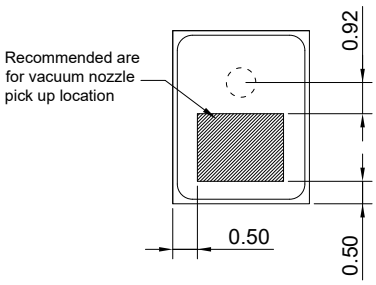

Pick Up Pressure Limits		
Condition	mmHg	PSI
Max. Air Purge	3000	58
Max. Vacuum	-500	9.6

Figure 13. Packup Tool Pick Location

10.3. Label Layout



Figure 14. Label Layout Sample