BeStar Technologies Inc.
Address: 761 N. 17th Street Unit 4, St. Charles, IL 60174
Tel : 847-261-2850 E-mail : sales@bestartech.com Web : www.bestartech.com

Document Number : 1304-75
Revision : A3
Total Pages : 12
Prepare by : Loki, **Lo**
Date : 17 February, 2017

SoniCrest Brand Acoustic Components
www.jlsonicrest.com
Document Type : Specification
Product Type : Silicon Microphone Component
Part Number : SMO05A-42

A1 - New issue created by Ting Lok, Ngan on 30 Apr., 2013		
A2 - Updated section 4 - 7, 9 - 11 by Loki, Lo on 26 May, 2016		
A3 - Updated section 2, 5 and 11 by Loki, Lo on 17 Feb., 2017		

This material is the property of BeStar Technologies Inc.
Unauthorized copying or use of this material is prohibited.

1. Purpose and Scope

This document contains both general requirements, qualification requirements, and those specific electrical, mechanical requirements for this part.

2. Description

3.76 x 2.24 x 1.10 mm analog silicon microphone with N1 Sensor and C1 ASIC, top mounted, RoHS compliant.

3. Application

Smartphones, Wearables, Smart home devices, Video cameras, IoT devices, Automotive, Audio Input Peripherals, etc.

4. Features

- High Performance Analog ultra low pressure sensor
- Temperature Coefficient of Sensitivity stability within +/- 0.60 dB/Deg C.
- Pressure Coefficient of Stability within +/- 0.55 dB/Kpa
- Ultra Low Profile Package Availability
- Surface Mountable: MLP Design
- Tape & Reel Packaging
- RoHS Compliance

5. Interface Circuit Design Considerations

5.1. Design Consideration

5.1.1. Must avoid connecting 2.2K resistor between VDD and output terminal will result in non-functional failure or current consumption will be too high.

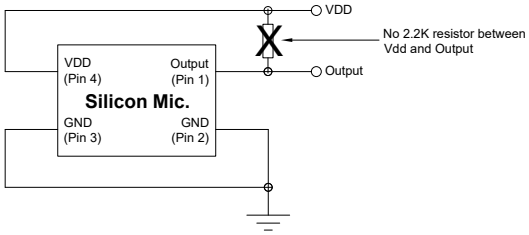

Figure 1. Design Consideration (1)

5.1.2. Must avoid connecting RC to pin 2 because SoniCrest silicon microphones are all fixed gain series. Connecting RC to pin 2 leads to pin 2 floating resulted in malfunctioning or non-functional.

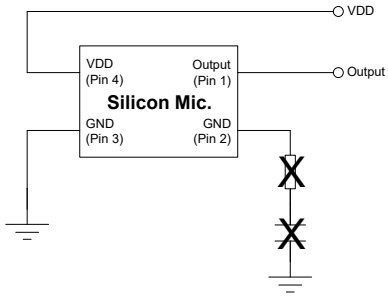

Figure 2. Design Consideration (2)

5.1.3. Interface Schematic

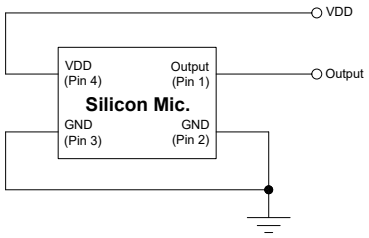

Figure 3. SMO05A-42 Interface Schematic Diagram

5.2. Electrical Layout

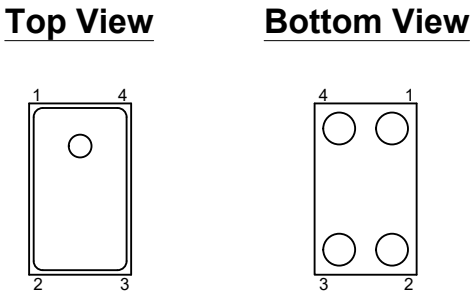

Pin No.	Description
1	Output
2	GND
3	GND
4	Power

Figure 4. Electrical Layout of SMO05A series

5.3. Terminology

5.3.1. Pin 1: The Output Terminal, where the analog signal equivalent to applied pressure is available.

5.3.2. Pin 2, 3: The Terminal where the supply negative is connected to sensor package.

5.3.3. Pin 4: Input Voltage (maximum 3.6V).

5.3.4. Sensitivity: Sensitivity is the open circuit output voltage amplitude for a given sound pressure at the pressure sensor diaphragm. This is frequency dependent so typically quoted at 1KHz. Units are defined in dB logarithmic scale. It is measured at the following conditions, f = P_{IN} = 1Pa, V_{DD} = 2.1V.

6. Component Requirement (All data taken at 25°C unless otherwise specified)

6.1. General Requirement

6.1.1. Operating Temperature Range : -40°C to +100°C

6.1.2. Storage Temperature Range : -40°C to +125°C

6.1.3. Solder reflow (for 30s max. of peak temperature) : <= 260°C

6.2. Electrical Requirement

6.2.1. Directivity : Omnidirectional

6.2.2. Maximum Input Sound Level (for less than 5% distortion) : 120dB

6.2.3. Sensitivity (0dB = 1V/Pa, 1kHz) : -42dB ± 3dB

6.2.4. Operating Voltage Range : 1.5V to 3.6V

6.2.5. Current Consumption : <= 0.2mA

6.2.6. Frequency Range : 100Hz ~ 10KHz

6.2.7. Output Impedance : <= 300Ω

6.2.8. Total Harmonic Distortion : 0.5% (at 94dB)

6.2.9. S/N Ratio : >= 58dB (Typical)
>= 55dB (Minimum)

6.2.10. Sensitivity Variation over Operation Range : <= 0.5dB

6.2.11. Power Supply Rejection (100mVp-p square wave, 217Hz, A-weighted) : -70dB (Typical)

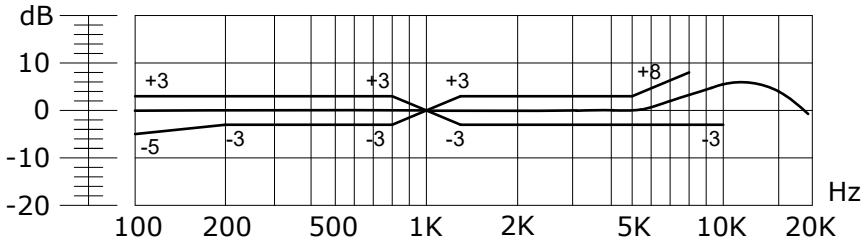

Figure 5. Frequency Response

6.3. Mechanical Requirement

6.3.1. Layout and Dimension : See Section 9, Figure 8

6.4. Test Setup

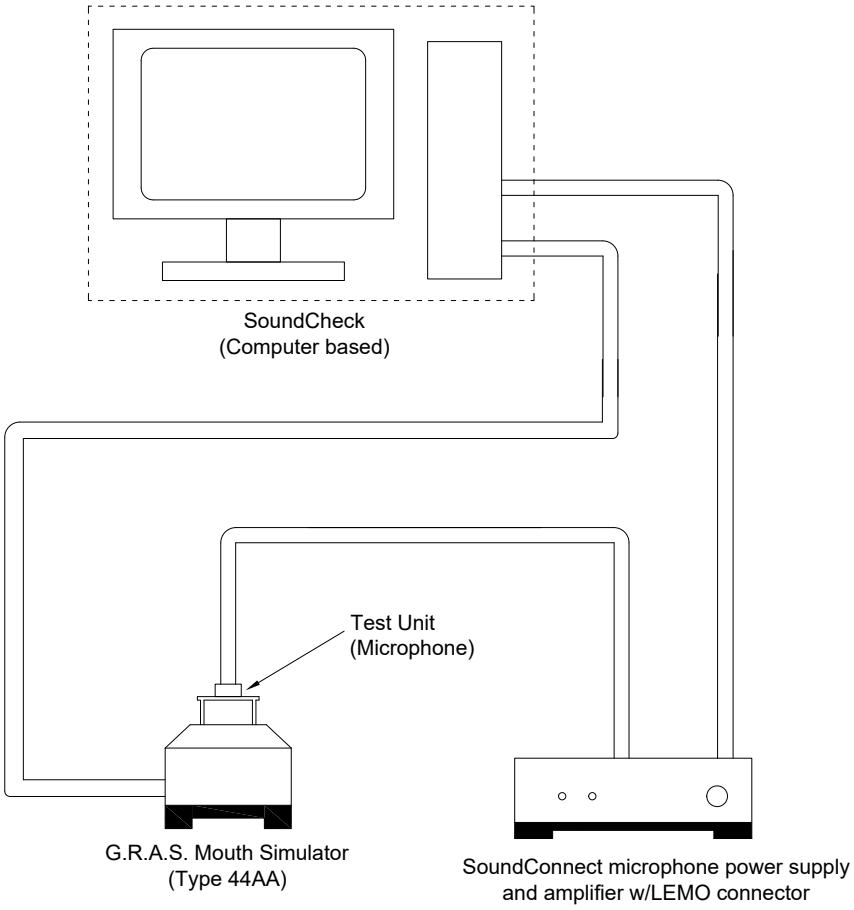

Figure 6. Test Setup

Notes : Apply sinusoidal wave from SoundCheck Audio Analyzer (Computer based) to speaker in G.R.A.S. Mouth Simulator Type 44AA. Measure sensitivity of test unit with specified driving circuit. The whole testing system should be calibrated based on calibration procedure recommended by the manufacturer before measurement. Measurement should be carried out in an excellent insulation from external noise environment.

7. Reliability Test

7.1. Reflow Simulation (without solder) : Subject samples to reflow soldering condition with maximum temperature 260±5°C for 3 times. Components must be fully stabilized between each reflow test, which may require up to a 2 hours soak.

7.2. Static Humidity : Precondition at room temperature for 1 hour. Then expose to +85°C with 85% relative humidity for 1000 hours. Finally dry at room ambient for 3 hours before taking final measurement.

7.3. Temperature Shock : Each temperature cycle shall consist of 30 minutes at -40°C, 30 minutes at +125°C with 5 minutes transition time. Test duration is for 30 cycles. Components must be fully stabilized at temperature extremes before data is taken, which may require up to a 2 hours soak.

7.4. ESD Sensitivity : Perform ESD sensitivity threshold measurement for each contact according to MIL-STD 883G, Method 3105.7 for Human Body Model. Identify the ESD threshold levels indicating passage of 8000V Human Body Model.

7.5. Random Vibration : Vibrate randomly along three perpendicular directions for 30 minutes in each direction, 4 cycles from 20 ~ 2000Hz with a peak acceleration 20g.

7.6. Mechanical Shock : Subject samples to half sine shock pulses (3000g±15% for 0.3ms) in each direction, totally 18 shocks.

7.7. Operation Life : Subject samples to +125°C for 168 hours under maximum input voltage.

7.8. Drop Test : Drop samples naturally from the height of 1.5m onto a steel surface board for 3 times in 6 directions, totally 18 drops.

8. Recommended reflow oven temperature profile

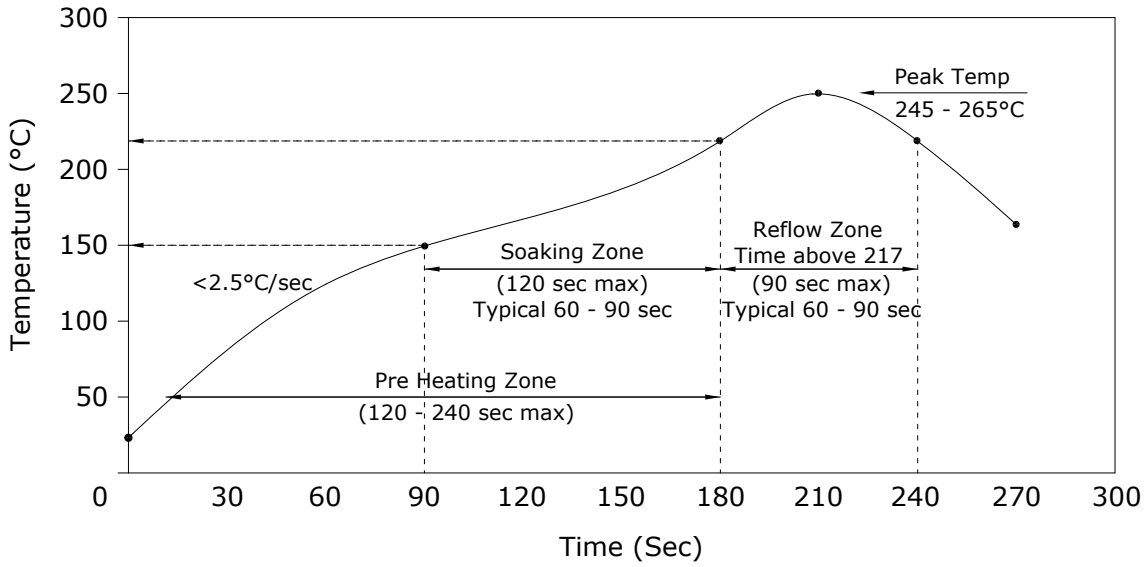

Figure 7. Recommended reflow oven temperature profile

Notes:

1. Pb-free soldering assembing processing: Reference IPC/JEDEC J-STD-020C.
2. Number of Reflows - Recommended not more than 3 cycles.
3. The SMD process should use no clean solder paste, cleaning is not allowed because washing will damage the pressure sensor sensing elements.
4. Do not board wash after the reflow process. Board washing and cleaning can damage the device.
5. Do not expose ultrasonic processing and cleaning.
6. Do not expose plasma cleaning process.

9. Mechanical Requirements

Unit : mm
Tolerance : Linear = ±0.15
(unless otherwise specified)

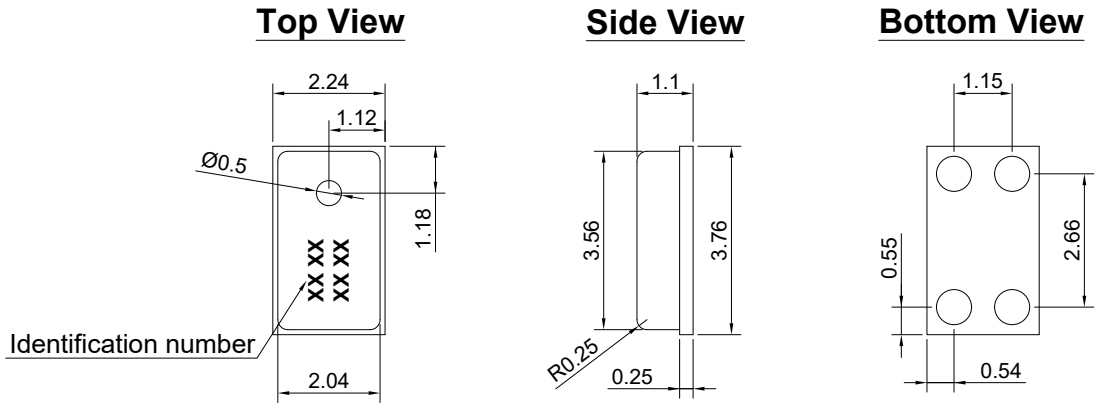

Figure 8. Mechanical Layout of SMO05A-42

10. PCB Solder Pad Layout

The below figure provide general guidance about the recommended PCB land pattern. The land pattern dimensions are exactly the same size and shape as the pads on the pressure sensor module. Recommended solder paste height is 3-5 mils (75μm to 125μm).

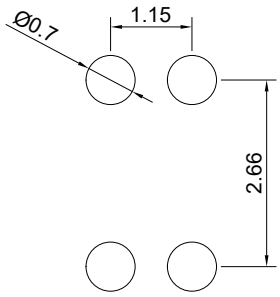

Figure 9. PCB solder pad layout for SMO05A-42

11. Standard Packing Requirements

11.1. Tape and Reel

11.1.1 Packing Options

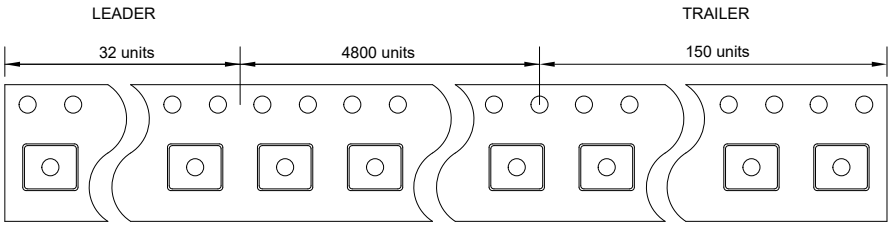

Figure 10. Tape and Reel Packing Quantity

11.1.2 Tape Layout

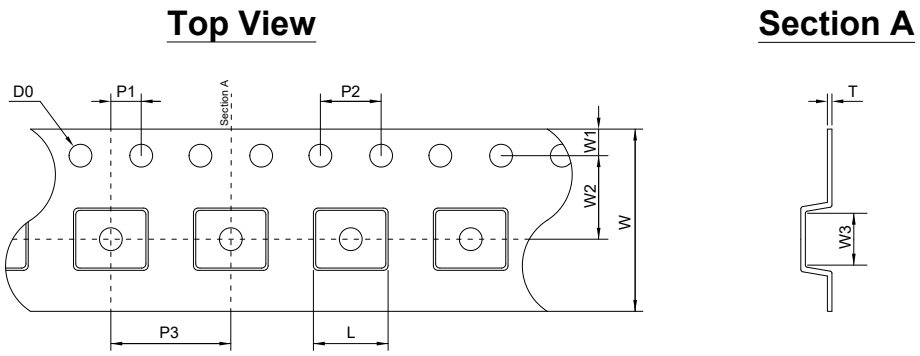

Figure 11. Tape Layout

Symbol	Millimeter		
	MINIMUM	NOMINAL	MAXIMUM
D0	1.5	1.5	1.6
P1	1.9	2.0	2.1
P2	3.9	4.0	4.1
P3	7.9	8.0	8.1
L	4.0	4.1	4.2
W	11.7	12.0	12.3
W1	1.65	1.75	1.85
W2	5.4	5.5	5.6
W3	2.49	2.59	2.69
T	0.25	0.3	0.35

11.1.3. Reel Layout

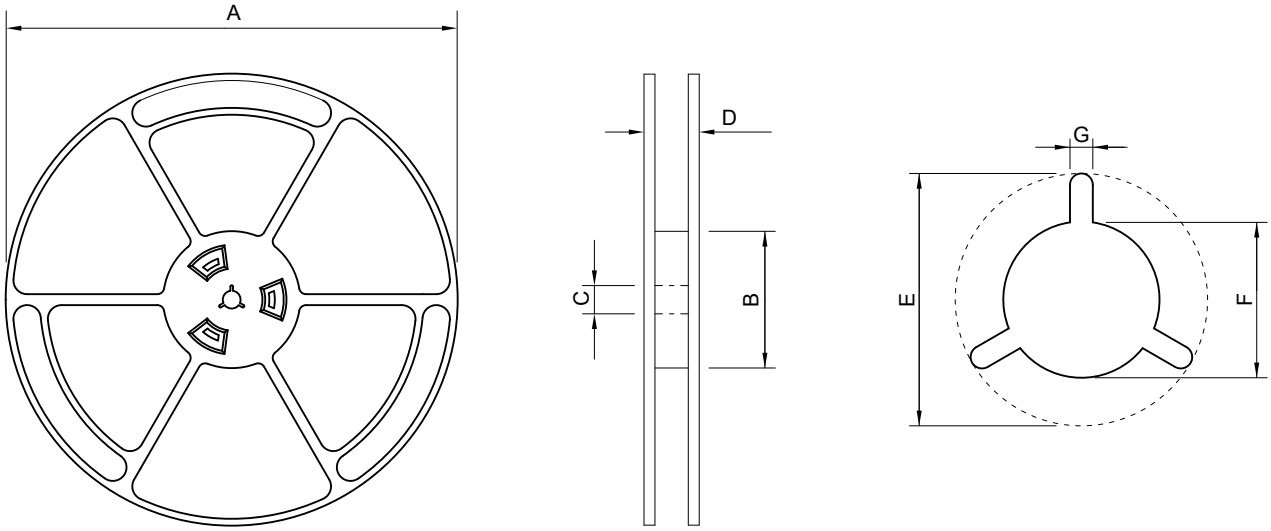

Figure 12. Reel Layout

Item	Symbols	Diameter (mm)		
		Minimum	Nominal	Maximum
Reel Diameter	A	-	330	-
Hub Diameter	B	98	100	102
Hub Hole Diameter	C	12.8	13	13.5
Reel Width (measured at Hub)	D	-	18	18.4
Arbor Hole	E	20.2	-	-
Arbor Hw in mm Diameter	F	12.8	13.0	13.5
Arbor Slot Width	G	1.5	-	-

11.1.4. Reel Installation and Carton Information

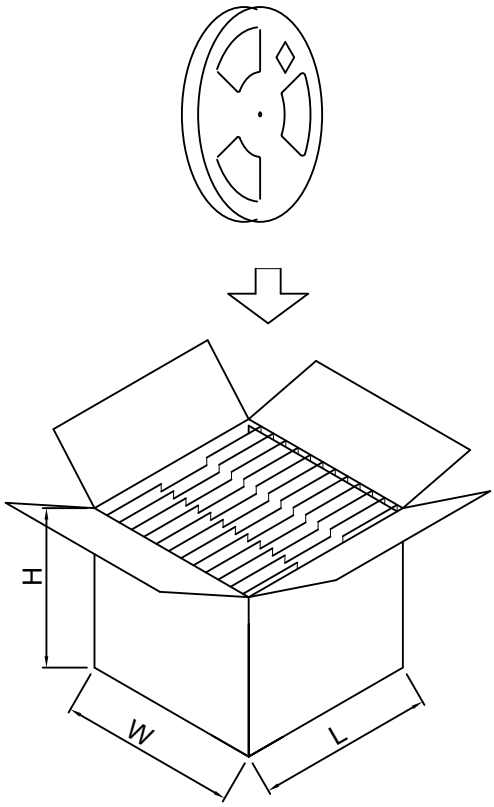

Figure 13. Reel Installation

Qty/reel (pcs)	Weight/reel (kg)	Reel/carton (nos)	Qty/carton (pcs)	Weight full load (kg)	Dimension carton box (LxWxH) mm	Storage (Temp)
4800	0.70	3	14400	~4.50	419 x 115 x 381	-10°C ~ 50°C
4800	0.70	5	24000	~6.00	419 x 161 x 381	-10°C ~ 50°C
4800	0.70	10	48000	~10.00	419 x 276 x 381	-10°C ~ 50°C

11.2. Pickup Tool Pick Location

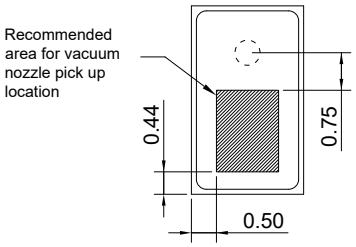

Pick Up Pressure Limits		
Condition	mmHg	PSI
Max. Air Purge	3000	58
Max. Vacuum	-500	9.6

Figure 14. Packup Tool Pick Location

11.3. Label Layout



Figure 15. Label Layout Sample