SPECIFICATION
FOR ELECTRO-MAGNET TRANSDUCER

Customer	
Customer P/N	
BeStar Model Name	SMT0903H4.4 LF SMT0905H4.4LF
Product No.	051204 051205
Issue No.	BS/TET01.156C
Issue Date	06/10/14

Approval:

1.Characteristic 特性
2.Drawing 外形图
3.Reliability Test可靠性试验
4.Packing 包装

Drawn by	Checked by	Approved by	Customer approved
韩学慧	程久生	邵凯	

For conform to the European Union Directive on the Restriction of Hazardous Substances(RoHS), this type of productions forbid use all the hazardous substances as follow:
Lead
Cadmium
Mercury
Hexavalent chromium
Polybrominated biphenyls (PBB)
Polybrominated diphenyl ethers (PBDE)

BESTAR ELECTRONICS INDUSTRY CO.,LTD
No.199 HuangHe West Road.New district,changzhou,
jiangsu Province,P.R.China
Tel:86-519-88222567 Fax:86-519-88222551
Http:www.be-star.com
E-mail: wu@be-star.com, info@be-star.com

SMT09H4.4LF



1. Characteristic 特性

★Electrical and Mechanical Characteristics 电声及机械性能特性

No.	Item项目	Specifications 规格	
		SMT0903H4.4LF	SMT0905H4.4LF
1	Rated Voltage(Vp-p) 额定电压	3	5
2	Operating Voltage(Vp-p)操作电压	2~5	4~6
3	a) Current Consumption(mA) 消耗电流	Max. 80	
4	a) Sound Pressure Level (dB)at 10cm 声压级	85	
5	Resonant Frequecy(Hz) 谐振频率	2730	
6	Coil Resistance(ohm) 电阻	18±3	30±3
7	Operating Temperature (°C) 操作温度	-40...+85	
8	Storage Temperature (°C) 储存温度	-40...+85	
9	Weight(g) 重量	0.6	
	a)Value applying at rated voltage(2730Hz,1/2duty,square wave)		

2.Drawing 外形图

Tolerance:±0.3mm

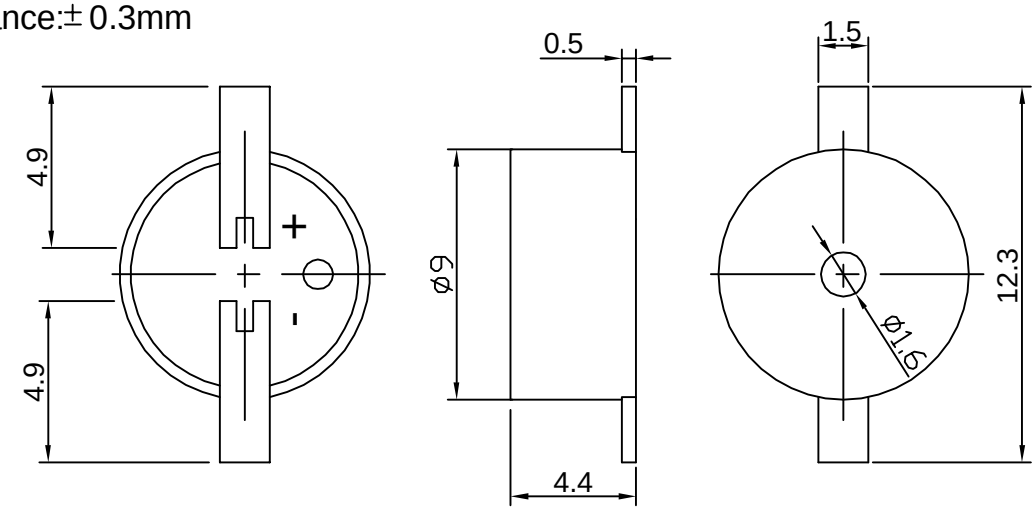

	签名 NAME	日期 DATE	Page:1 of 3	SMT09H4.4LF
设计 DIS.	韩学慧	06.10.14		
审核 CHEC.	程久生	06.10.14	3rd angle projection	TRANSDUCER
批准 APPR.	邵凯	06.10.14		
Bestar Acoustic	BESTAR ELECTRONICS INDUSTRY CO.,LTD 博士达电子有限公司			DRG NO BS/TET01.156C

SMT09H4.4LF

3. Reliability test 可靠性试验

3.1 High temperature test 高温试验
Temperature 温度 +85° C
Duration 时间 96hrs

3.2 Low temperature test 低温试验
Temperature 温度 -40° C
Duration 时间 96hrs

3.3 Temperature cycle test 温度循环试验
Cycles 5

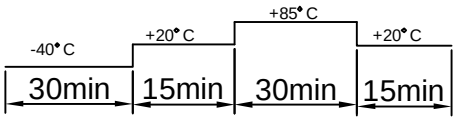

3.4 Humidity cycle test 湿度循环试验
Cycles 10

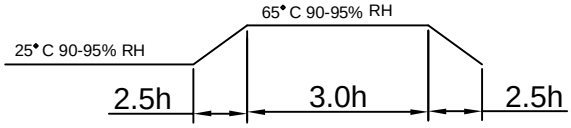

all these tests above should be measured after leaving normal temperature for 2hrs.
以上试验应在常温下放置两小时后测试

3.5 Load test 负载试验
Power supply 电源 rated voltage
Duration 时间 1000hrs

3.6 Vibration Test 振动试验
Vibration Frequency 振动频率 10~55Hz
Amplitude 振幅 1.5mm
Duration x,y&z directions 时间 30min

3.7 Drop test跌落试验
Height 高度 70cm
(to 10mm thickness woodenboard)
Direction 方向 3

3.8 Solderability test可焊性
Temperature 温度 255° C
Duration 时间 3sec

Notice: specification must be satisfied in this condition ,except S.P.L(S.P.L shall be 80dB more).

注意：试验后所有性能必须符合要求，但是声压除外，声压必须大于80 dB

SMT09H4.4LF

4.Packing包装

4.1 Tape layout

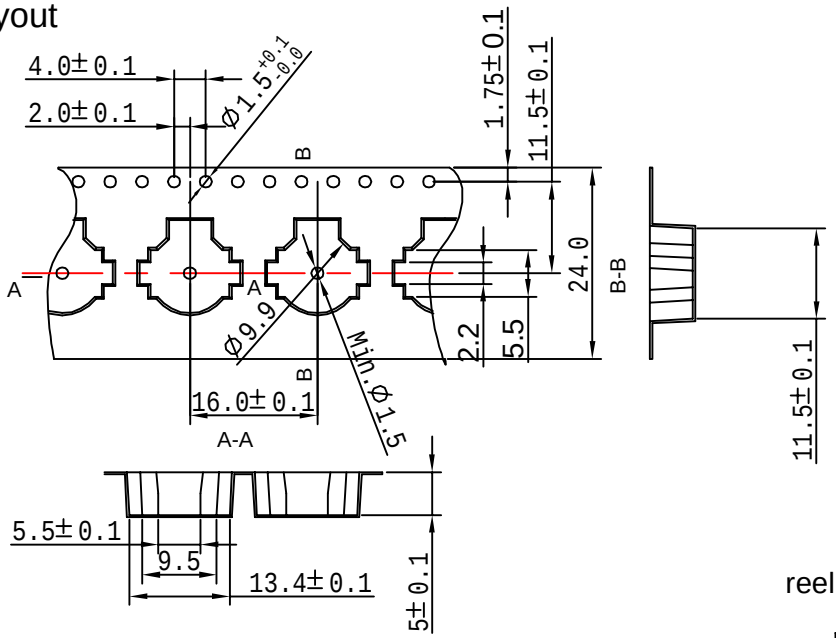

4.2 Reel

reel direction

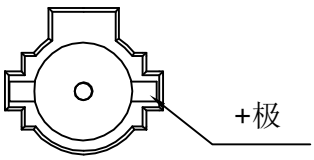

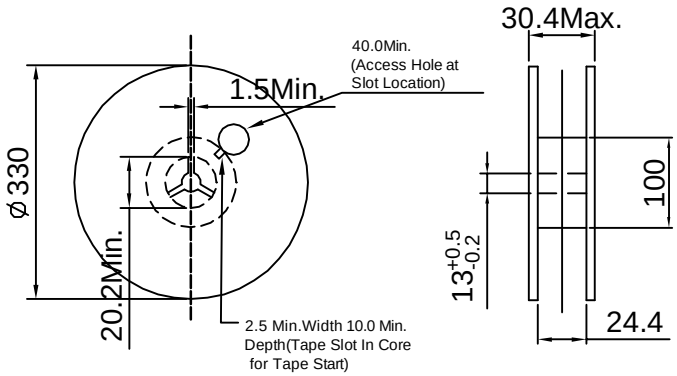

4.3 Packing Quantity :800 pcs per reel

5 reels per carton (Total 4000 pcs)

carton size 38x28x37

	签名 NAME	日期 DATE	Page:3 of 3	SMT09H4.4LF
设计 DIS.	韩学慧	06.10.14		
审核 CHEC.	程久生	06.10.14	3rd angle projection	TRANSDUCER
批准 APPR.	邵凯	06.10.14		

BESTAR ELECTRONICS INDUSTRY CO.,LTD
博士达电子有限公司

DRG NO
BS/TET01.156C