Acoustics &Sensor Bestar 博士達	SPECIFICATION FOR MAGNETIC Transducer			
	TOTAL PAGE	07	www.be-star.com	RoHS

Customer		Model Name	SMT1212-03XH10 LF
Customer P/N		Product No.	050914
Date	15 Dec. 11	Issue No.	BS/TET01.363E
Page	01 of 07	Issue Date	11/12/15

Approval:

1.Characteristics
2.Dimension
3.Reliability test
4.Surface mounting condition
5.Packing
6.Notice
7.History change record

Drawn by	Checked by	Approved by	Customer approved
徐 波	赵 峥	王 平	

BESTAR ELECTRONICS INDUSTRY CO.,LTD
No.199 HuangHe West Road.New district,ChangZhou,JiangSu Province,P.R.China
Tel: +86 519 88222567 ***Fax:*** +86 519 88222551
E-mail:wu@be-star.com ***http://www.be-star.com***

SMT1212-03XH10 LF

1. Characteristics:



1.1 Features

1. SMD;thinner , smaller size
2. High S.P.L.; and clear sound
3. Reflowable;RoHS complant
4. Tape & Reel supply
5. Minimum quantity (one reel): 200 pcs.

1.2Electrical and Mechanical Characteristics

No	Type	Specifications
1	Rated Voltage	3V
2	Operating Voltage	2~5V
3	a)Rated Current	Max 30mA
4	a) Sound Output at 10cm	Min 85 dB
5	a)Resonant Frequency	2300 ±300 Hz
6	Temperature Range	-40~+85 °C
7	Storage Temperature	-40~+90 °C
8	Weight	3.5g
a)Value applying rated voltage(DC)		
Sound Output after reliability test more than 80 dB		

2.Dimension:

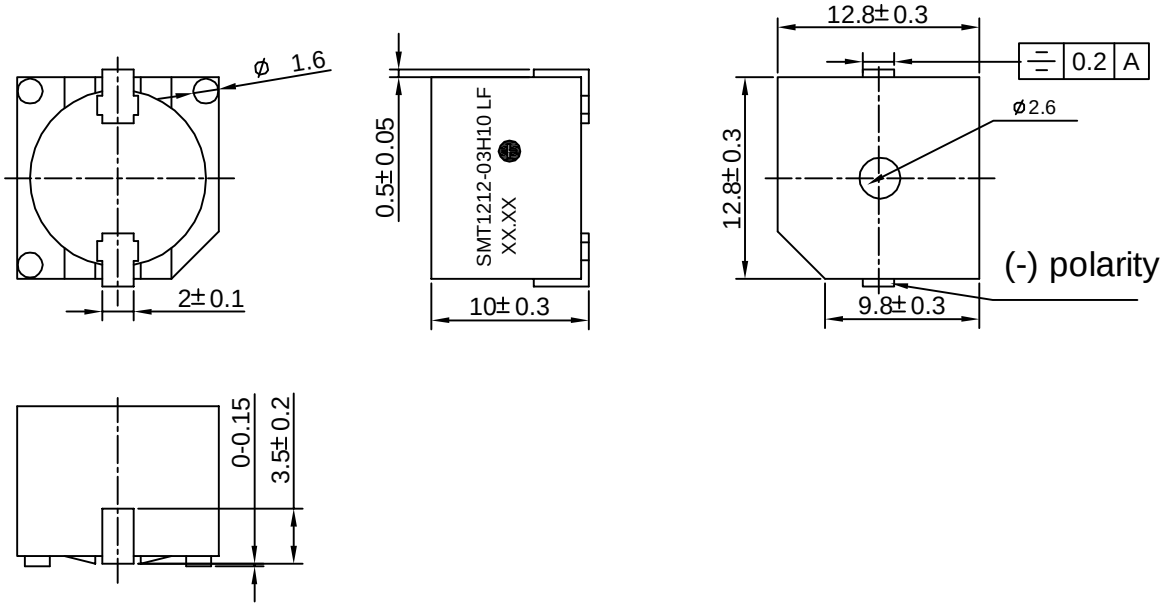

This print and information there in are proprietary to Bestar Electronics Industry Co., Ltd. and shall not be used in whole or in part without its written content

Rev.	Date	Drawn	Note		
E	11/12/15	徐 波		Date:	11/12/15
D	06/09/11	韩学慧		Drawn by:	徐 波
C	06/08/07	韩学慧		Checked by:	赵 峥
				Approved by:	王 平

SMT1212-03XH10 LF

Transducer

BESTAR ELECTRONICS INDUSTRY CO.,LTD
www.be-star.com wu@be-star.com

3.Reliability Test

3.1 High temperature storage test
Temperature +90°C
Duration 96hrs

3.2 Low temperature storage test
Temperature -40°C
Duration 96hrs

3.3 Life test in normal temperature
Power supply Rated voltage
Duration 1000hrs

3.4 Temperature cycle test
Cycles 5

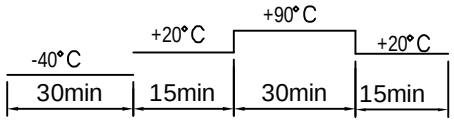

3.5 Humidity cycle test
Cycles 5

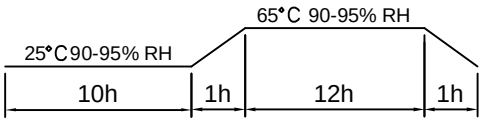

All these tests above should be measured after leaving normal temperature for 2hrs.

3.6 Vibration Test
Vibration Frequency 10~55Hz
Amplitude 1.53mm
Direction 3(x.y&z)
Duration 2hrs each direction (total 6 hrs)

3.7 Drop test
Height 70cm
(to 10mm thickness woodenboard)
Direction 3(x.y&z)

3.8 Solderability Test
1. Hand soldering system
Soldering Temperature 245°C
Duration 3 sec

This print and information there in are proprietary to Bestar Electronics Industry Co., Ltd. and shall not be used in whole or in part without its written content

Rev.	Date	Drawn	Note		
E	11/12/15	徐 波		Date:	11/12/15
D	06/09/11	韩学慧		Drawn by:	徐 波
C	06/08/07	韩学慧		Checked by:	赵 峥
				Approved by:	王 平

SMT1212-03XH10 LF

Transducer

4.Surface Mounting Condition

In automated mounting of The SMD Sound Transducers on printed circuit boards,any bending,expanding and pulling forces or shocks against the SMD Sound Transducers shall be kept minimum to prevent them from electrical failures and mechanical damages of the devices.

Soldering(Reflow)
(1)solderings of The SMD Sound Transducers shall conform to the soldering conditions in the individual specifications.
(2)The SMD Sound Transducers are designed for"Reflow Solderings"
(3)In the reflow solderings,too high soldering temperatures and too large tempearture gradient such as rapid heating or cooling may cause electrical failures and mechanical damages of the devices.

Follwing soldering conditions are recommend;Refer to Fig.1

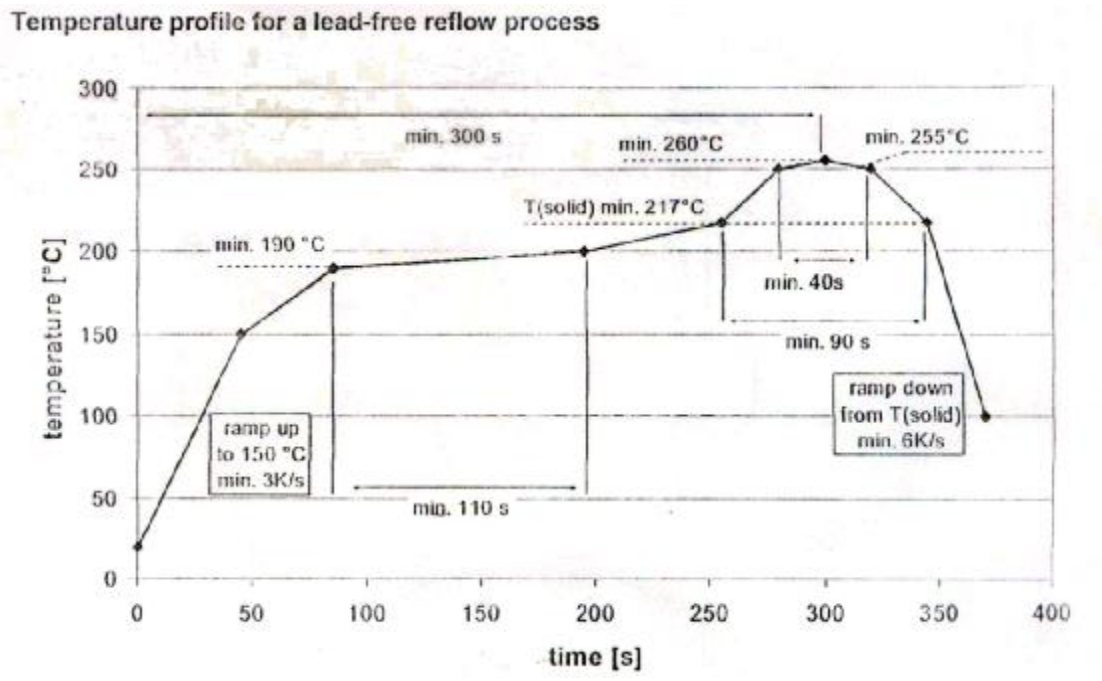

Fig. 1 Recommended soldering Temperature-Time profile (Reflow soldering)

This print and information there in are proprietary to Bestar Electronics Industry Co., Ltd. and shall not be used in whole or in part without its written content

SMT1212-03XH10 LF

5.Packing

5. 1Tape on Reel Packing

5.11 packing drawing

Dimensions of carrier tape

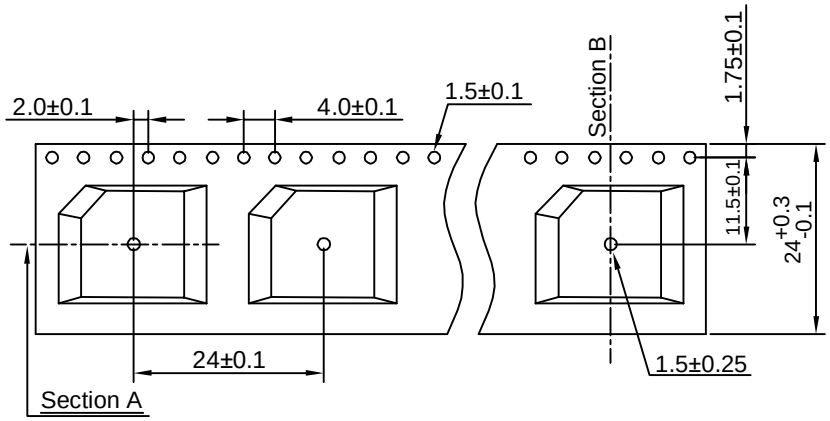

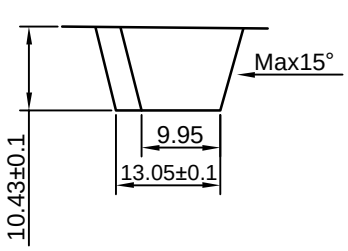

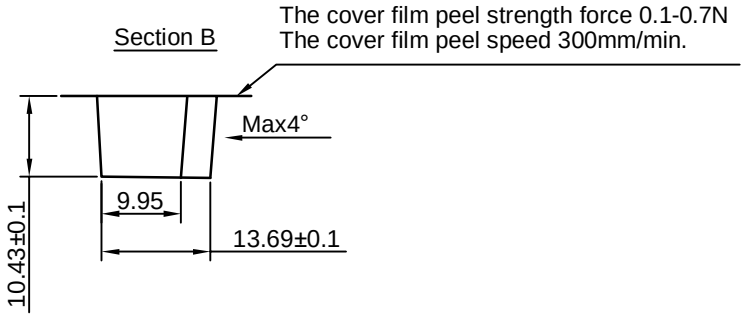

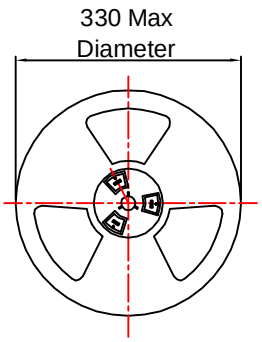

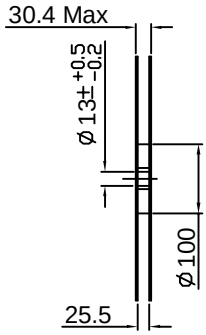

This print and information there in are proprietary to Bestar Electronics Industry Co., Ltd. and shall not be used in whole or in part without its written content

Rev.	Date	Drawn	Note		
E	11/12/15	徐 波		Date:	11/12/15
D	06/09/11	韩学慧		Drawn by:	徐 波
C	06/08/07	韩学慧		Checked by:	赵 峥
				Approved by:	王 平

SMT1212-03XH10 LF

Transducer

BESTAR ELECTRONICS INDUSTRY CO.,LTD
www.be-star.com wu@be-star.com

SMT1212-03XH10 LF

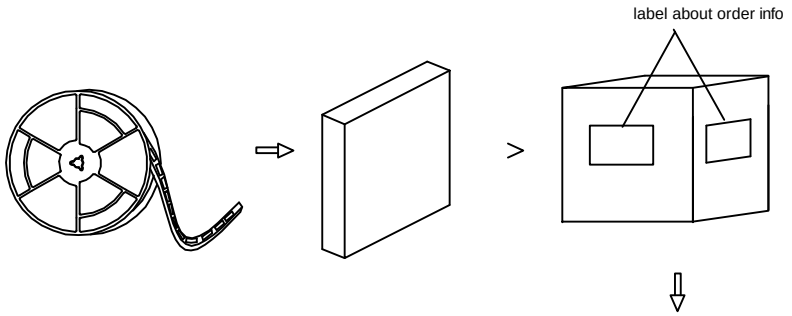

5.12 Reel Packing

1)200pcs/reel
2)5reel/carton
3)1000 pcs/carton in total
4)carton size 38 x 28 x 37cm

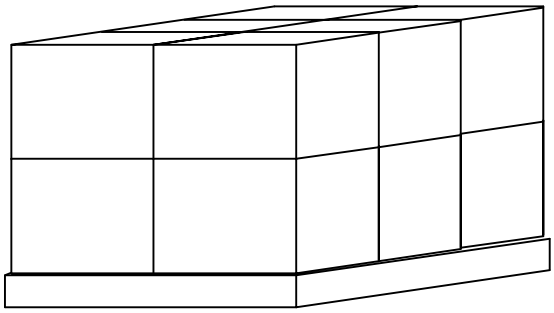

6.Notice

6.1 The products mustn't be washed

6.2 **Storage Condition**

The products should be stored in the room ,where the temperature/humidity is stable. And avoid such places where there are large temperature changes. Please store the products at the following conditions:

Temperature: -10 to + 40°C Humidity: 15 to 85% R.H.

6.3 **Expire Date on Storage**

Expire date (Shelf life) of the products is six months after deliveried under the conditions of a sealed and an unopened package. Please use the products within six months after deliveried.

If you store the products for a long time (more than six months), use carefully because the products may be degraded in the solderability and/or rusty.Please confirm solderability and characteristics for the products regularly.

6.4 **Notice on Product Storage**

(1) Please do not store the products in a chemical atmosphere (Acids, Alkali, Bases, Organic gas, Sulfides and so on), because the characteristics may be reduced at quality, and/or be degraded in the solderability due to the storage in a chemical atmosphere.

(2) Please use the products immediately after the package is opened, because the characteristics may be reduced at quality, and/or be degraded in the solderability due to storage under the poor condition.

This print and information there in are proprietary to Bestar Electronics Industry Co., Ltd. and shall not be used in whole or in part without its written content

Rev.	Date	Drawn	Note		
E	11/12/15	徐 波		Date:	11/12/15
D	06/09/11	韩学慧		Drawn by:	徐 波
C	06/08/07	韩学慧		Checked by:	赵 峥
				Approved by:	王 平

SMT1212-03XH10 LF

Transducer

7. History change record

version No.	Change Items		Date	Drawn	Approved
	Before	After			
A			06/06/23	韩学慧	郭敏
B		change polarity	06/07/06	韩学慧	郭敏
C		Change product quantity per reel	06/08/07	韩学慧	郭敏
D		Change reel package	06/09/11	韩学慧	郭敏
E		Delete customer P/N	11/12/15	徐 波	王平

This print and information there in are proprietary to Bestar Electronics Industry Co., Ltd. and shall not be used in whole or in part without its written content