SPECIFICATION
For Electro-Magnet Transducer

Customer	
Customer P/N	
BeStar Model Name	SMT8585-03H3.6LF
Product No.	050100
Issue No.	BS/TET01.015C
Issue Date	07/05/19

Approval:

1.Characteristics
2.Dimension
3.Reliability Test
4.Surface Mounting Condition
5.Soldering Pattern
6.Tape on Reel Packing
7.Notice
8.History change record

Drawn by	Checked by	Approved by	Customer approved
韩学慧	朱成兴	程久生	

For conform to the European Union Directive on the Restriction of Hazardous Substances(RoHS), this type of productions forbid use all the hazardous substances as follow:
Lead
Cadmium
Mercury
Hexavalent chromium
Polybrominated biphenyls (PBB)
Polybrominated diphenyl ethers (PBDE)

BESTAR ELECTRONICS INDUSTRY CO.,LTD
No.199 HuangHe West Road.New district,changzhou,
jiangsu Province,P.R.China
Tel:86-519-8222567 Fax:86-519-8222551
Http:www.be-star.com
E-mail: wu@be-star.com, info@be-star.com

SMT8585-03H3.6 LF

1. Characteristics

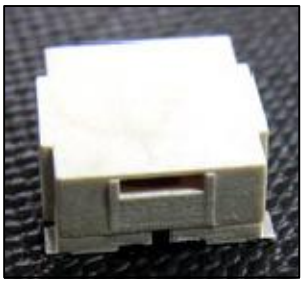

1.1 Features

1. SMD;thinner , smaller size
2. High S.P.L.; and clear sound
3. Reflowable;RoHS complant
4. Tape & Reel supply
5. Minimum quantity (one reel): 1000 pcs.

1.2 Electrical and Mechanical Characteristics

No.	Item	Specifications
1	Rated Voltage	3Vp-p
2	Operating Voltage	2...5 Vp-p
3	Rated Current	max.80mA
4	Sound Output (at 10cm)	min.85dB
5	Resonance Frequency	2730Hz
6	Coil Resistance	18±3ohm
7	Operating Temp.	-40...+85deg. Celsius
8	Storage Temp.	-40...+85deg. Celsius
9	Housing Material	LCP
10	Weight	0.5 g
Current/Sound Output:value applying rated voltage (2730Hz,1/2 duty,squre wave)		

1.3 Test method:

1.31.Recommended Circuit

the following are examples of externally driven circuits.

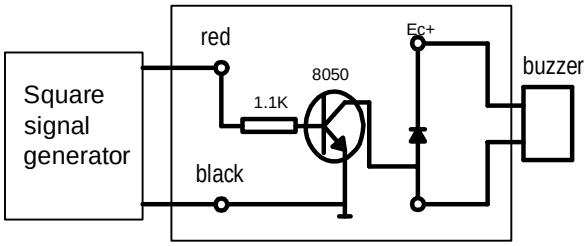

1.32.Standard text Fixture

No reaction in space with in 400mm in all direction

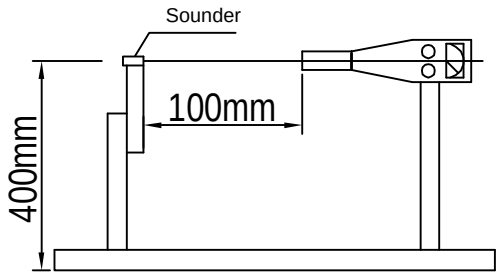

REV.	Date	Drawn	Note		
C	07/05/19	韩学慧		Date:	07/05/19
B	05/03/20	王善梅		Drawn by:	韩学慧
A	02/05/18	王善梅		Checked by:	朱成兴
				Approved by:	程久生

SMT8585-03H3.6LF

Transducer

BESTAR ELECTRONICS INDUSTRY CO.,LTD

www.be-star.com wu@be-star.com

DRG NO: BS/TET01.015C

Page:1of 7

This print and information there in are proprietary to Bestar Electronics Industry Co., Ltd. and shall not be used in whole or in part without its written content

SMT8585-03H3.6LF

1.4Frequency Response(Square wave 3Vp-p 10cm)

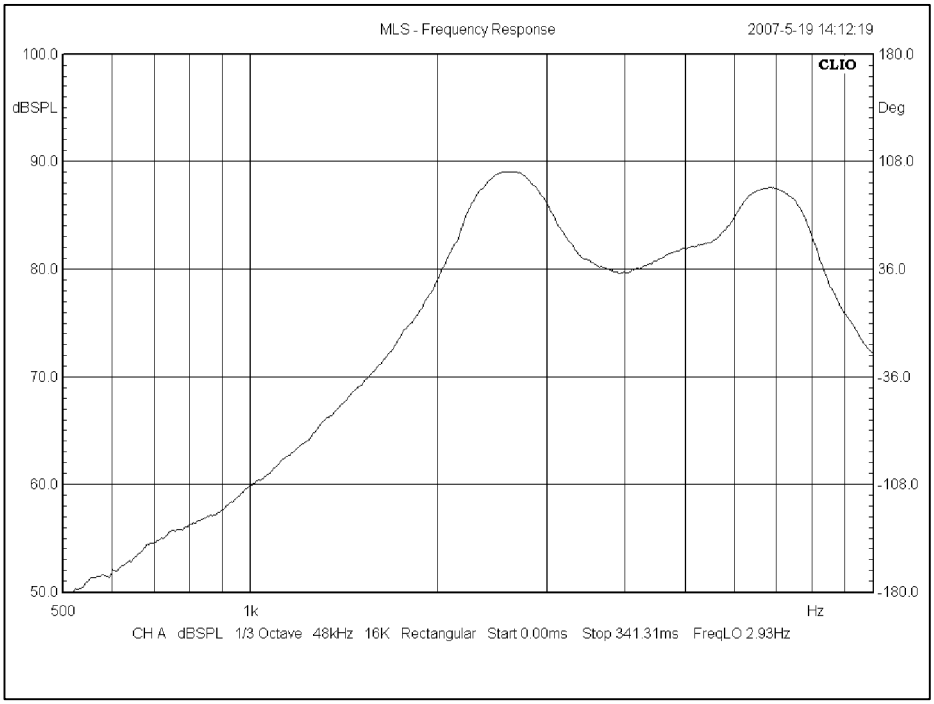

2. Drawing

Tolerance:± 0.2 Unit:mm

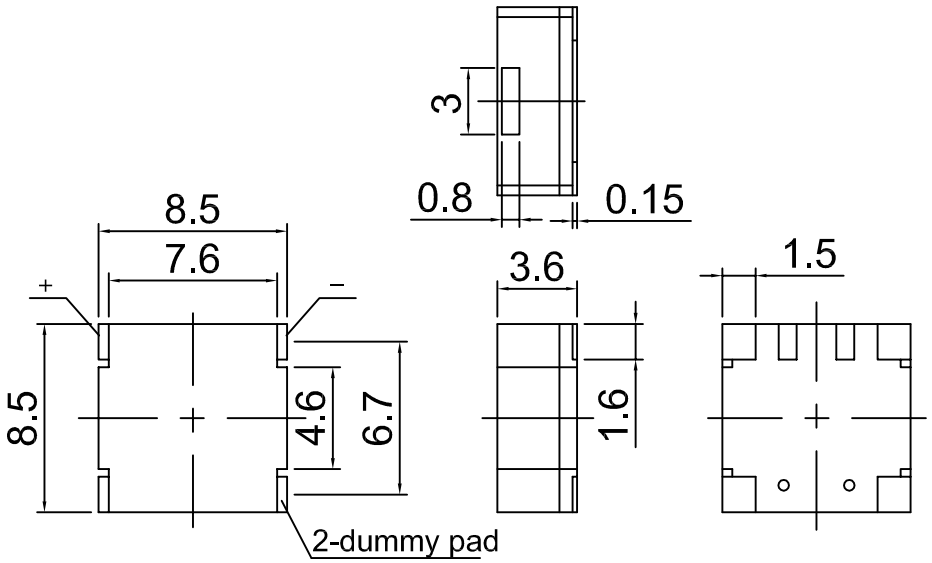

This print and information there in are proprietary to Bestar Electronics Industry Co., Ltd. and shall not be used in whole or in part without its written content

REV.	Date	Drawn	Note			
C	07/05/19	韩学慧		Date:	07/05/19	SMT8585-03H3.6LF
B	05/03/20	王善梅		Drawn by:	韩学慧	
A	02/05/18	王善梅		Checked by:	朱成兴	Transducer
				Approved by:	程久生	

BESTAR ELECTRONICS INDUSTRY CO.,LTD
www.be-star.com wu@be-star.com

DRG NO: BS/TET01.015C

SMT8585-03H3.6LF

3.Reliability Test

3.1 High temp. storage life test
- Temperature +85 °C
- Duration 240hrs

3.2 Low temp. storage life test
- Temperature -40 °C
- Duration 240hrs

3.3 Life test in normal temperature
- Power supply Rated voltage
- Duration 96hrs

3.4 Temperature shock test
- Cycles 14

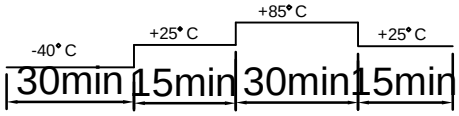

3.5 Humidity cycle test
- Cycles 10

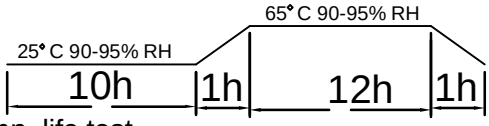

3.6 High temp. life test
- Temperature +85 °C
- Duration 96hrs

3.7 Low temp. life test
- Temperature -20 °C
- Duration 96hrs

All these tests above should be measured after leaving normal temperature for 4hrs.

3.8 Vibration Test
- Vibration Frequency 10~200~10Hz
- Time 15min
- Acceleration 5g
- Direction x .y &z 2h (total 6hrs)

3.9 Drop test
- Height 150cm(drop to concrete floor)
- Direction one time in each 6 planes(total of 6 times)

3.10Solderability
- Temperature of soldering pot 235 °C± 5
- Duration 2 ±0.5sec

3.11Pin lead strength
- Force 10N
- Duration 10 ±1sec

Notice: All specification must be satisfied in this condition except SPL. SPL shall be 77dB or more.

This print and information there in are proprietary to Bestar Electronics Industry Co., Ltd. and shall not be used in whole or in part without its written content

REV.	Date	Drawn	Note		
C	07/05/19	韩学慧		Date:	07/05/19
B	05/03/20	王善梅		Drawn by:	韩学慧
A	02/05/18	王善梅		Checked by:	朱成兴
				Approved by:	程久生

SMT8585-03H3.6LF

Transducer

4.Surface Mounting Condition

In automated mounting of The SMD Sound Transducers on printed circuit boards,any bending,expanding and pulling forces or shocks against the SMD Sound Transducers shall be kept minimum to preven them from electrical failures and mechanical damages of the devices.

Soldering(Reflow)

(1)Solderings of The SMD Sound Transducers shall conform to the soldering conditions in the individual specifications.

(2)The SMD Sound Transducers are designed for"Reflow Solderings"

(3)In the reflow solderings,too high soldering temperatures and too large tempearture gradient such as rapid heating or cooling may cause electrical failures and mechanical damages of the devices.

Follwing soldering conditions are recommend;Refer to Fig.1

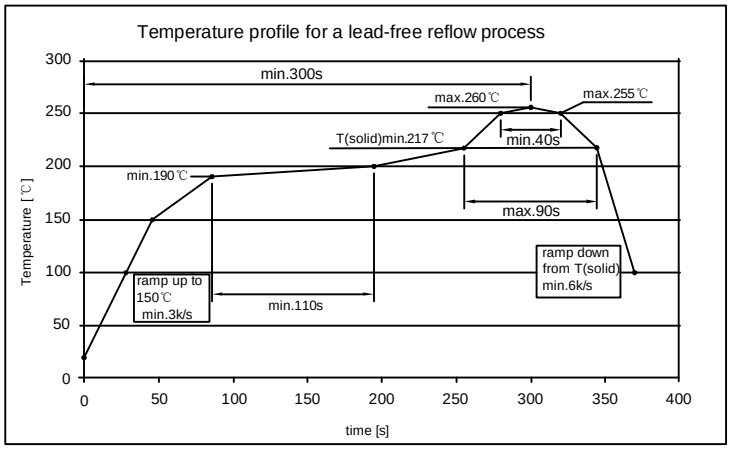

Fig. 1 Recommended soldering Temperature-Time profile (Reflow soldering)

5.Soldering Pattern

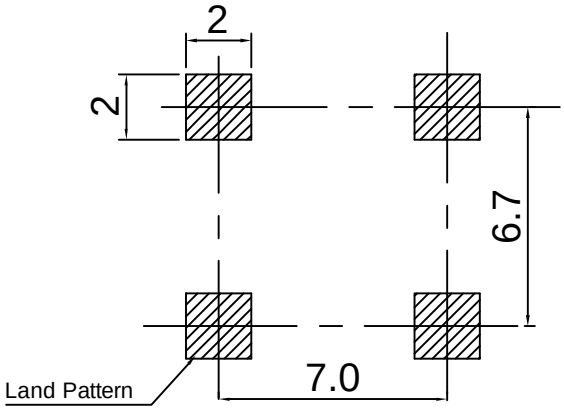

This print and information there in are proprietary to Bestar Electronics Industry Co., Ltd. and shall not be used in whole or in part without its written content

REV.	Date	Drawn	Note		
C	07/05/19	韩学慧		Date:	07/05/19
B	05/03/20	王善梅		Drawn by:	韩学慧
A	02/05/18	王善梅		Checked by:	朱成兴
				Approved by:	程久生

SMT8585-03H3.6LF

Transducer

SMT8585-03H3.6LF

6. Tape on Reel Packing

6.1 packing drawing

Dimensions of carrier tape

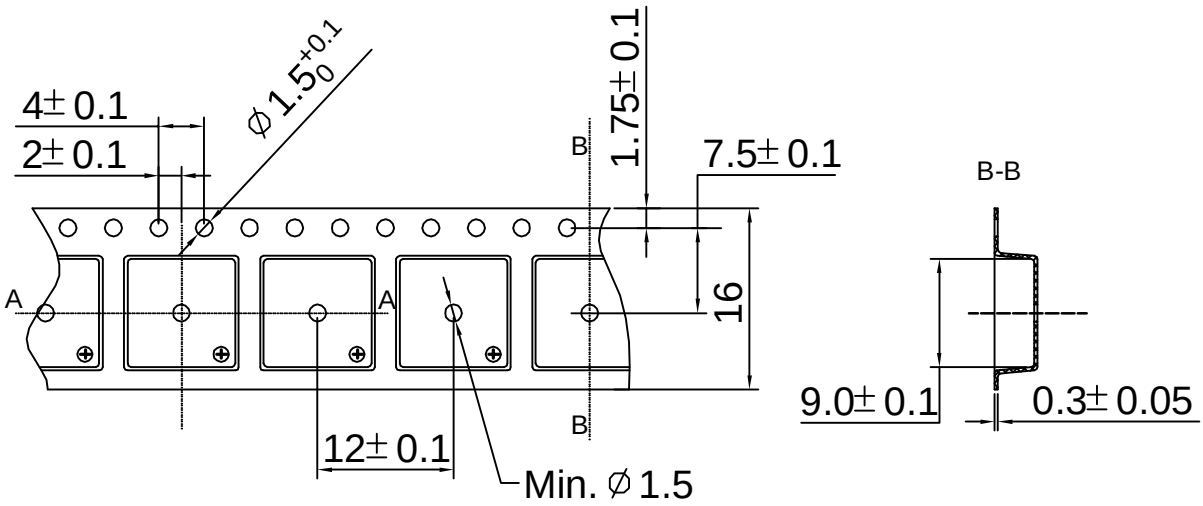

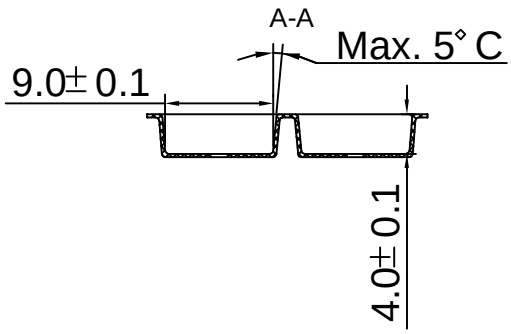

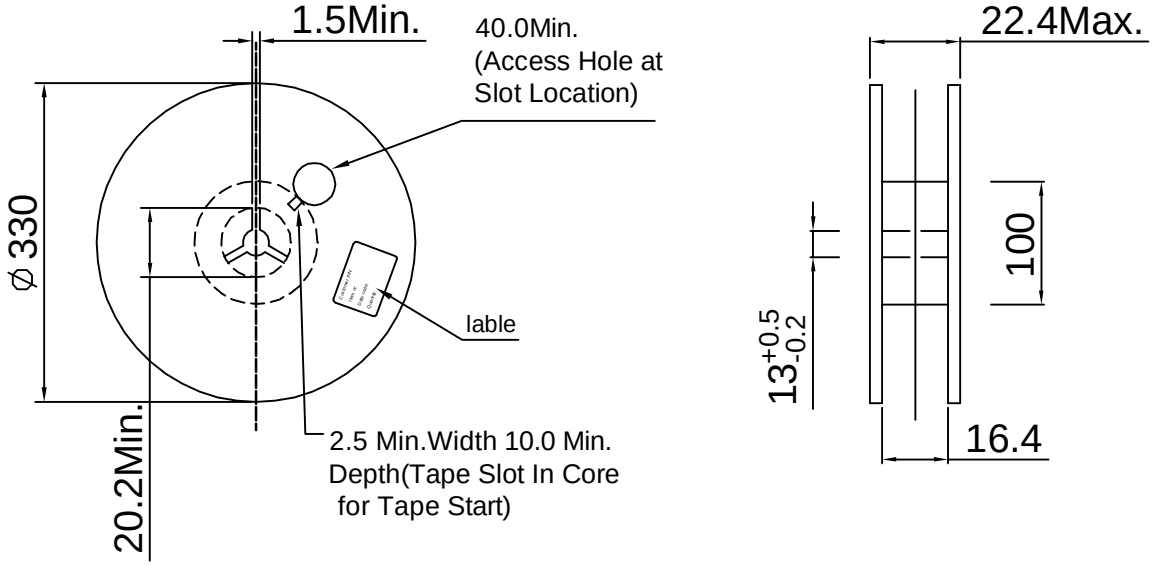

This print and information there in are proprietary to Bestar Electronics Industry Co., Ltd. and shall not be used in whole or in part without its written content

REV.	Date	Drawn	Note			
C	07/05/19	韩学慧		Date:	07/05/19	SMT8585-03H3.6LF
B	05/03/20	王善梅		Drawn by:	韩学慧	
A	02/05/18	王善梅		Checked by:	朱成兴	Transducer
				Approved by:	程久生	
BESTAR ELECTRONICS INDUSTRY CO.,LTD www.be-star.com wu@be-star.com						DRG NO: BS/TET01.015C Page:5 of 7

SMT8585-03H3.6LF

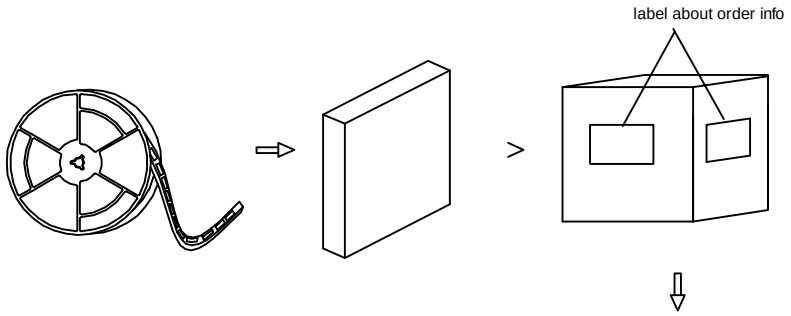

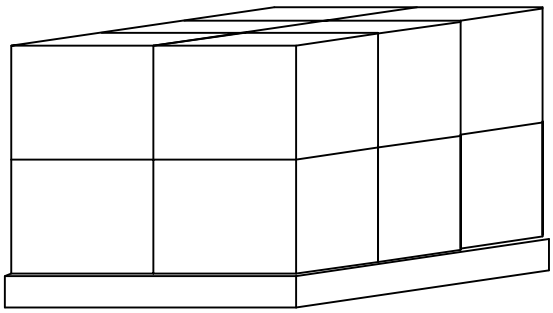

6.2 packing quantity

6.21 1000pcs/reel
6.22 5reel/carton
6.23 5000 pcs/carton in total
6.24 carton size 38x28x37cm
6.25 12carton/tray
6.26 tray size 85x77x74cm

7.Notice

7.1 The products mustn't be washed
7.2 **Storage Condition**
The products should be stored in the room ,where the temperature/humidity is stable. And avoid such places where there are large temperature changes. Please store the products at the following conditions:
Temperature: -10 to + 40°C Humidity: 15 to 85% R.H.
7.3 **Expire Date on Storage**
Expire date (Shelf life) of the products is six months after deliveried under the conditions of a sealed and an unopened package. Please use the products within six months after deliveried.
If you store the products for a long time (more than six months), use carefully because the products may be degraded in the solderability and/or rusty.Please confirm solderability and characteristics for the products regularly.
7.4 **Notice on Product Storage**
(1) Please do not store the products in a chemical atmosphere (Acids, Alkali, Bases, Organic gas, Sulfides and so on), because the characteristics may be reduced at quality, and/or be degraded in the solderability due to the storage in a chemical atmosphere.
(2) Please use the products immediately after the package is opened, because the characteristics may be reduced at quality, and/or be degraded in the solderability due to storage under the poor condition.

This print and information there in are proprietary to Bestar Electronics Industry Co., Ltd. and shall not be used in whole or in part without its written content

REV.	Date	Drawn	Note			
C	07/05/19	韩学慧		Date:	07/05/19	SMT8585-03H3.6LF
B	05/03/20	王善梅		Drawn by:	韩学慧	
A	02/05/18	王善梅		Checked by:	朱成兴	Transducer
				Approved by:	程久生	

SMT8585-03H3.6 LF

8. History change record

version No.	Change Items		Date	Drawn	Approved
	Before	After			
A			02/05/18	王善梅	查红红
B		ROHS	05/03/20	王善梅	郭敏
C		change the curve of reflow soldering	07/05/19	韩学慧	程久生

This print and information there in are proprietary to Bestar Electronics Industry Co., Ltd. and shall not be used in whole or in part without its written content

REV.	Date	Drawn	Note
C	07/05/19	韩学慧	
B	05/03/20	王善梅	
A	02/05/18	王善梅	

Date:	07/05/19
Drawn by:	韩学慧
Checked by:	朱成兴
Approved by:	程久生

SMT8585-03H3.6LF

Transducer