Bestar Acoustic	SPECIFICATION FOR ELECTRO-MAGNET TRANSDUCER		
	TOTAL PAGE	08	www.be-star.com	RoHS

Customer		Model Name	SMT8585-05H03 LF
Customer P/N		Product No.	050229
Date	20 Mar. 09	Issue No.	BS/TET01.568A
Page	01 of 08	Issue Date	09/03/20

Approval:

1.Characteristics
2.Dimension
3.Reliability Test
4.Surface Mounting Condition
5.Soldering Pattern
6.Tape on Reel Packing
7.Notice
8.History change record

Drawn by	Checked by	Approved by	Customer approved
魏奉珍	徐 波	陶红仲	

BESTAR ELECTRONICS INDUSTRY CO.,LTD
No.199 HuangHe West Road.New district,ChangZhou,JiangSu Province,P.R.China
Tel: +86 519 88222567 ***Fax:*** +86 519 88222551
E-mail:wu@be-star.com ***http://www.be-star.com***

SMT8585-05H03 LF

1. Characteristics



1.1 Features

1. SMD;thinner , smaller size
2. High S.P.L.; and clear sound
3. Reflowable;RoHS complant
4. Tape & Reel supply
5. Minimum quantity (one reel): 1000 pcs.

1.2 Electrical and Mechanical Characteristics

No.	Item	Specifications
1	Rated Voltage	5Vo-p
2	Operating Voltage	4...6 Vo-p
3	Current	Max.80mA
4	Sound Output (at 10cm)	Min.85dB
5	Rated Frequency	2731Hz
6	Coil Resistance	32± 5 ohm
7	Operating Temp.	-40...+85°C
8	Storage Temp.	-40...+85°C
9	Weight	Max 0.5g
※Current/Sound Output:value applying rated voltage		
(2731Hz,1/2 duty,square wave)		

1.3 Test method:

1.31.Recommended Circuit

the following are examples of externally driven circuits.

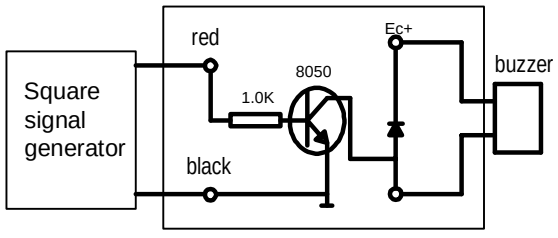

1.32.Standard text Fixture

No reaction in space with in 400mm in all direction

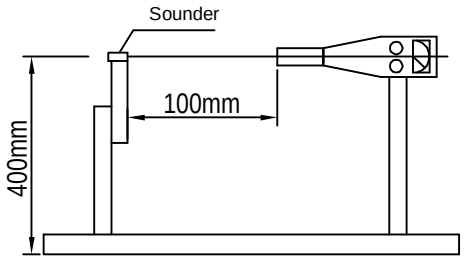

This print and information there in are proprietary to Bestar Electronics Industry Co., Ltd. and shall not be used in whole or in part without its written content

Rev.	Date	Drawn	Note	Approved by:	陶红仲	SMT8585-05H03 LF
A	09/03/20	魏奉玲		Checked by:	徐 波	Transducer
				Drawn by:	魏奉玲	
				Date:	09/03/20	

SMT8585-05H03 LF

1.4 Frequency Response(Square wave 5Vo-p 10cm)

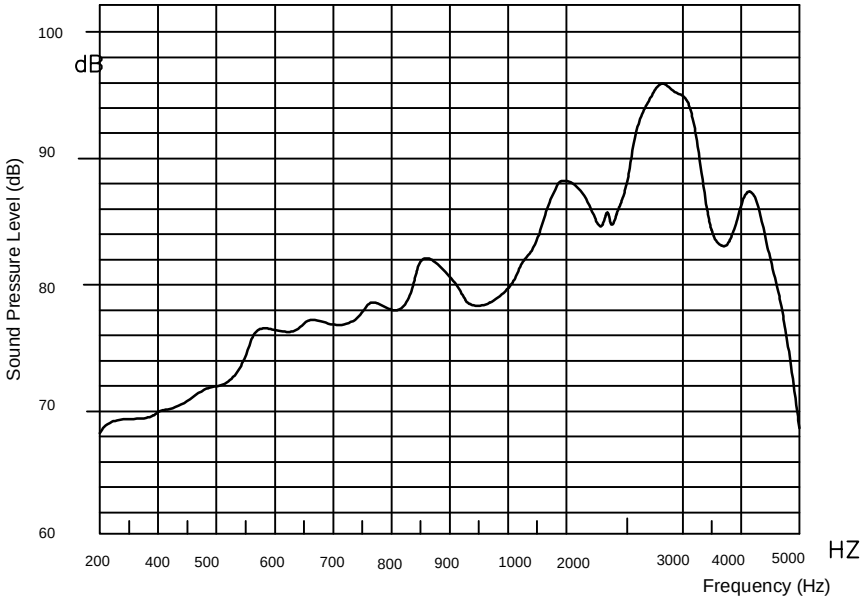

2.Dimension

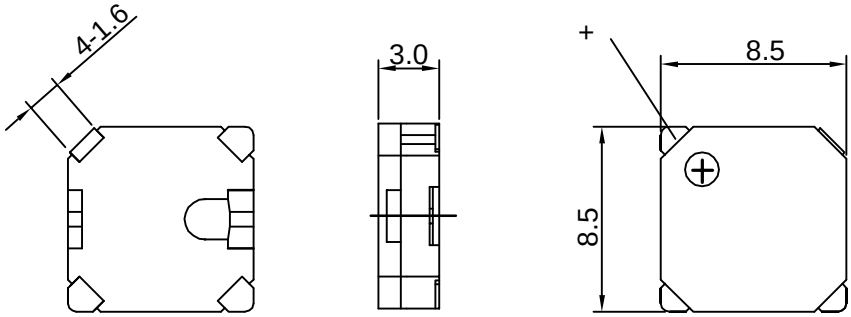

Tolerance: ± 0.2mm

This print and information there in are proprietary to Bestar Electronics Industry Co., Ltd. and shall not be used in whole or in part without its written content

				Date:	09/03/20	SMT8585-05H03 LF
				Drawn by:	魏奉玲	
A	A	09/03/20	魏奉玲	Checked by:	徐 波	Transducer
	Rev.	Date	Drawn	Approved by:	陶红仲	
BESTAR ELECTRONICS INDUSTRY CO.,LTD www.be-star.com wu@be-star.com					DRG NO: BS/TET01.568A	Page:3 of 8

SMT8585-05H03 LF

3.Reliability Test

3.1 High temp. storage life test

Temperature	+85°C
Duration	240hrs

3.2 Low temp. storage life test

Temperature	-40°C
Duration	240hrs

3.3 Life test in normal temperature

Power supply	Rated voltage
Duration	96hrs

3.4 Temperature shock test

Cycles	14

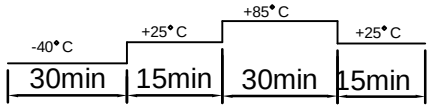

3.5 Humidity cycle test

Cycles	10

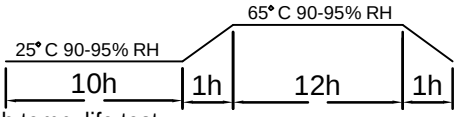

3.6 High temp. life test

Temperature	+85°C
Duration	96hrs

3.7 Low temp. life test

Temperature	-20°C
Duration	96hrs

All these tests above should be measured after leaving normal temperature for 4hrs.

3.8 Vibration Test

Vibration Frequency	50~100~50Hz
Time	15min
Acceleration	5g
Direction	x.y &z 2h (total 6hrs)

3.9 Drop test

Height	150cm(drop to concrete floor)
Direction	one time in each 6 planes(total of 6 times)

3.10Solderability

Temperature of soldering pot	250°C ± 5
Duration	2 ± 0.5sec

3.11Pin lead strength

Force	10N
Duration	10 ± 1sec

Notice: All specification must be satisfied in this condition except SPL. SPL shall be 83dB or more.

This print and information there in are proprietary to Bestar Electronics Industry Co., Ltd. and shall not be used in whole or in part without its written content

Rev.	Date	Drawn	Note		
				Date:	09/03/20
				Drawn by:	魏奉玲
A	09/03/20	魏奉玲		Checked by:	徐 波
				Approved by:	陶红仲

SMT8585-05H03 LF

Transducer

SMT8585-05H03 LF

4.Surface Mounting Condition

In automated mounting of The SMD Sound Transducers on printed circuit boards,any bending,expanding and pulling forces or shocks against the SMD Sound Transducers shall be kept minimum to preven them from electrical failures and mechanical damages of the devices.

Soldering(Reflow)
(1)Solderings of The SMD Sound Transducers shall conform to the soldering conditions in the individual specifications.
(2)The SMD Sound Transducers are designed for"Reflow Solderings"
(3)In the reflow solderings,too high soldering temperatures and too large tempearture gradient such as rapid heating or cooling may cause electrical failures and mechanical damages of the devices.
Follwing soldering conditions are recommend;Refer to Fig.1

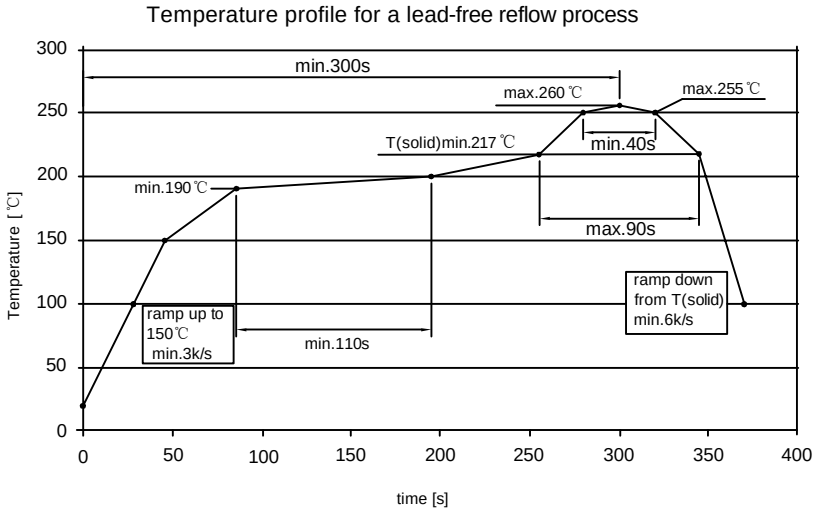

Fig. 1 Recommended soldering Temperature-Time profile (Reflow soldering)

Notice: All specification must be satisfied in this condition except SPL. SPL shall be 83dB or more.

5.Soldering Pattern

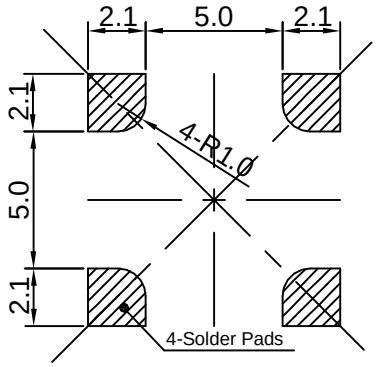

This print and information there in are proprietary to Bestar Electronics Industry Co., Ltd. and shall not be used in whole or in part without its written content

				Date:	09/03/20	SMT8585-05H03 LF
				Drawn by:	魏奉玲	
A	09/03/20	魏奉玲		Checked by:	徐 波	Transducer
Rev.	Date	Drawn	Note	Approved by:	陶红仲	
BESTAR ELECTRONICS INDUSTRY CO.,LTD www.be-star.com wu@be-star.com					DRG NO: BS/TET01.568A	Page:5 of 8

6. Tape on Reel Packing

6.1 packing drawing

Dimensions of carrier tape

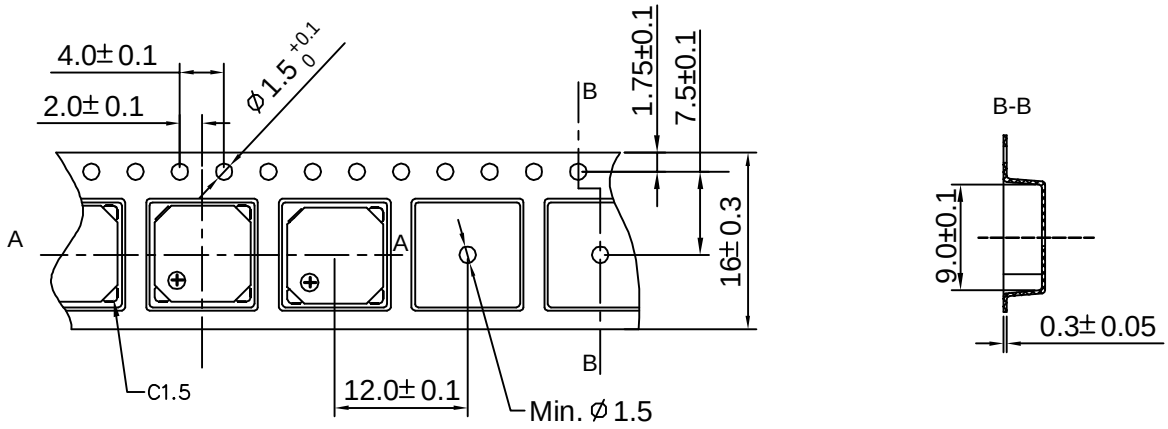

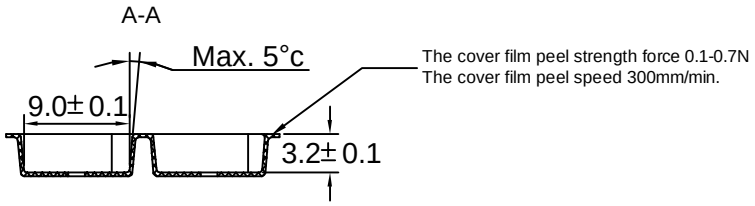

Dimensions of reel

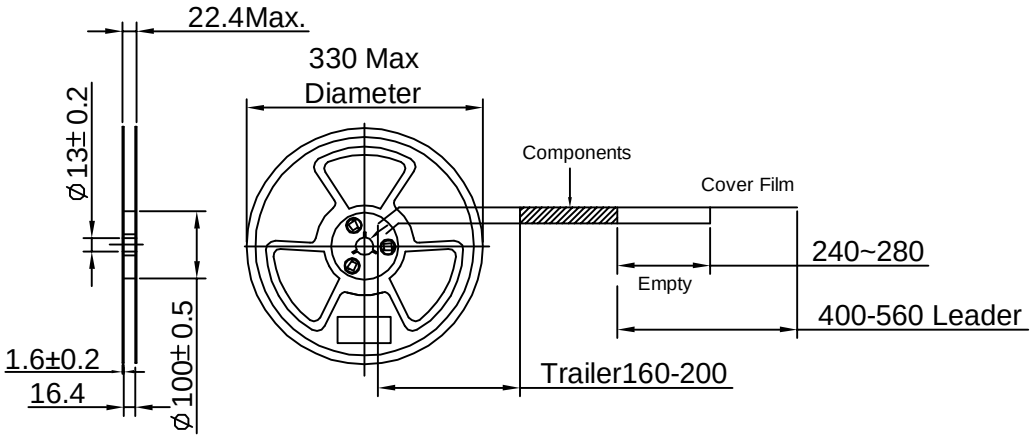

This print and information there in are proprietary to Bestar Electronics Industry Co., Ltd. and shall not be used in whole or in part without its written content

SMT8585-05H03 LF

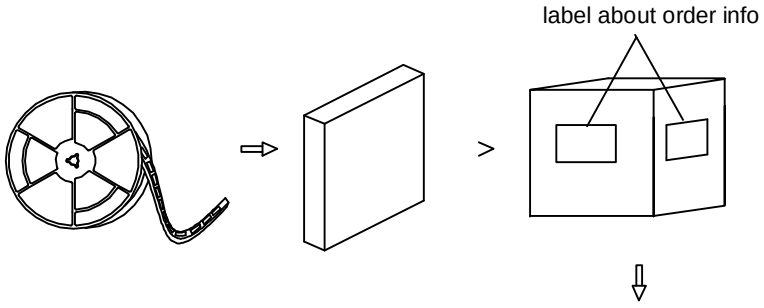

6.2 packing quantity

6.2.1 1000pcs/reel
6.2.2 5reels/carton
6.2.3 5000 pcs/carton in total
6.2.4 carton size 38x28x37cm
6.2.5 12cartons/tray
6.2.6 tray size 85x77x74cm

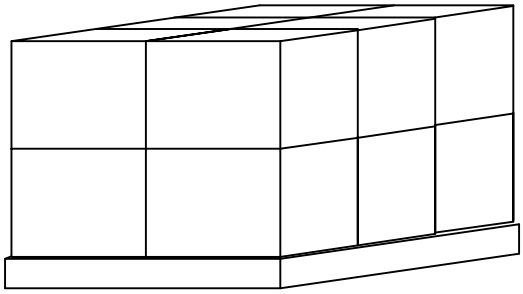

7.Notice

7.1 The products mustn't be washed

7.2 Storage Condition

The products should be stored in the room ,where the temperature/humidity is stable. And avoid such places where there are large temperature changes. Please store the products at the following conditions:
Temperature: -10 to + 40° C Humidity: 15 to 85% R.H.

7.3 Expire Date on Storage

Expire date (Shelf life) of the products is six months after deliveried under the conditions of a sealed and an unopened package. Please use the products within six months after deliveried. If you store the products for a long time (more than six months), use carefully because the products may be degraded in the solderability and/or rusty.Please confirm solderability and characteristics for the products regularly.

7.4 Notice on Product Storage

(1) Please do not store the products in a chemical atmosphere (Acids, Alkali, Bases, Organic gas, Sulfides and so on), because the characteristics may be reduced at quality, and/or be degraded in the solderability due to the storage in a chemical atmosphere.
(2) Please use the products immediately after the package is opened, because the characteristics may be reduced at quality, and/or be degraded in the solderability due to storage under the poor condition.

This print and information there in are proprietary to Bestar Electronics Industry Co., Ltd. and shall not be used in whole or in part without its written content

Rev.	Date	Drawn	Note		
				Date:	09/03/20
				Drawn by:	魏奉玲
A	09/03/20	魏奉玲		Checked by:	徐 波
				Approved by:	陶红仲

SMT8585-05H03 LF

8. History change record

version No.	Change Items		Date	Drawn	Approved
	Before	After			
A			09/03/20	魏奉玲	陶红仲

This print and information there in are proprietary to Bestar Electronics Industry Co., Ltd. and shall not be used in whole or in part without its written content