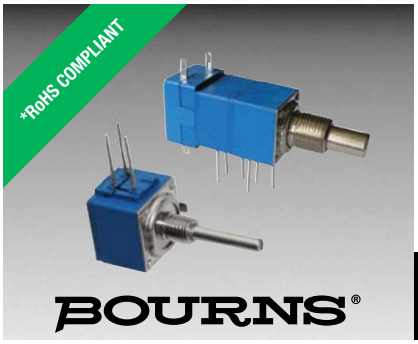

Features

- Metal shaft and bushing
- Consistent, smooth quality feel
- Up to 4 sections available
- Rotary switch option designed for “on-off” function control
- RoHS compliant*

81/82 – 5/8 ˝ Square Single-Turn Panel Control
85/86 – 5/8 ˝ Square Single-Turn Panel Control with Rotary Switch

Potentiometer Specifications

Initial Electrical Characteristics[1]	Conductive Plastic Element	Cermet Element
Standard Resistance Range		
Linear Tapers (A, B, E, & H)	(B & E) 1 K ohms to 1 megohm	(A & H) 100 ohms to 1 megohm
Audio Tapers (C, D, F, G, S, & T)	(D, G, S, & T) 1 K ohms to 1 megohm	(C & F) 1 K ohms to 1 megohm
Total Resistance Tolerance	±20 % or 10 %	±10 % or 5 %
Independent Linearity	±5 %	±5 %
Absolute Minimum Resistance	2 ohms maximum	2 ohms maximum
Effective Electrical Angle	(Linear tapers) 240 ° ± 5 °	(Linear tapers) 240 ° ± 6 °
	(Audio tapers) 225 ° ± 5 °	(Audio tapers) 225 ° ± 6 °
Contact Resistance Variation	±1 %	±1 % or 3 ohms (whichever is greater)
Dielectric Withstanding Voltage (MIL-STD-202, Method 301)		
Sea Level	1,500 VAC minimum	1,500 VAC minimum
70,000 Feet	500 VAC minimum	500 VAC minimum
Insulation Resistance (500 VDC)	1,000 megohms minimum	1,000 megohms minimum
Power Rating At 70 °C (Voltage Limited By Power Dissipation or 350 VAC, Whichever Is Less)		
+70 °C Single Section Assembly	(Linear tapers) 1 watt	(Linear tapers) 2 watts
	(Audio tapers) 0.5 watt	(Audio tapers) 1 watt
+70 °C Multiple Section Assembly	(Linear tapers) 0.5 watt/section	(Linear tapers) 1 watt/section
	(Audio tapers) 0.25 watt/section	(Audio tapers) 0.5 watt/section
+125 °C	0 watt	0 watt
Theoretical Resolution	Essentially infinite	Essentially infinite

Environmental Characteristics[1]

Operating Temperature Range	-40 °C to +125 °C	-40 °C to +125 °C
Storage Temperature Range	-55 °C to +125 °C	-55 °C to +125 °C
Temperature Coefficient Over Storage Temperature Range	±1,000 ppm/°C	±150 ppm/°C
Vibration (Single Section)	15 G	15 G
Total Resistance Shift	±2 % maximum	±2 % maximum
Voltage Ratio Shift	±5 % maximum	±5 % maximum
Shock (Single Section)	30 G	30 G
Total Resistance Shift	±2 % maximum	±2 % maximum
Voltage Ratio Shift	±5 % maximum	±5 % maximum
Load Life	1,000 hours	1,000 hours
Total Resistance Shift	±10 % maximum	±5 % maximum
Rotational Life (No Load)	100,000 cycles	100,000 cycles
Total Resistance Shift	(Linear taper) 10 ohms or ±10 % TRS max. (whichever is greater) (Audio taper) ±20 % maximum	(All tapers) ±5 % TRS maximum
Contact Resistance Variation @ 50,000 cycles		
(Audio taper)	±3 %	±3 %
(Linear taper)	±2 %	±2 %
Moisture Resistance (MIL-STD-202, Method 103, Condition B)		
Total Resistance Shift	(B & E tapers) ±10 % maximum (D, G, S & T tapers) ±20 % maximum	±5 % maximum (all tapers)
Insulation Resistance (500 VDC)	100 megohms minimum	100 megohms minimum
IP Rating	IP40	IP40

Mechanical Characteristics

Stop Strength	
1/4 ˝ and 1/8 ˝ diameter shafts	45.19 N-cm (4 lb.-in.)
7/8 ˝ length shaft	22.6 N-cm (2 lb.-in.)
Mechanical Angle	300 ° ±5 °
Torque	
Starting and Running Torque (Non-Locking Bushings)	
Single Section	0.14 to 1.06 N-cm (0.2 to 1.5 oz.-in.)
Dual Section	0.14 to 1.06 N-cm (0.2 to 1.5 oz.-in.)
Triple Section	0.35 to 1.41 N-cm (0.5 to 2.0 oz.-in.)
Quadruple Section	0.35 to 1.41 N-cm (0.5 to 2.0 oz.-in.)
Starting and Running Torque (Locking Bushings)	0.14 to 2.82 N-cm (0.2 to 4.0 oz.-in.)
Shaft Locking Torque with Locknut @ 10 in-lb. (B & E Bushings)	14 N-cm (20 oz-in.)
Mounting	1.7-2.0 N-m (15-18 lb.-in.) maximum
Weight (Single Section)	21 grams maximum
(Each Additional Section)	6 grams maximum
Terminals	Printed circuit terminals or J-Hooks
Soldering Condition	Recommended hand soldering using Sn95/Ag5 no clean solder, 0.025 ˝ wire diameter. Maximum temperature 399 °C (750 °F) for 3 seconds. No wash process to be used with no clean flux.
Marking	Manufacturer’s trademark, wiring diagram, date code and resistance, manufacturer’s part number
Ganging (multiple section potentiometers)	4 cup maximum
Hardware	One lockwasher and one mounting nut is shipped with each potentiometer; locking bushing versions are shipped with one additional locking nut (Bushing A: H-37-2 & H-38-2; Bushing B: H-37-2, H-38-2 & H-38-4; Bushing C: H-37-1 & H-38-1; Bushing E: H-37-1, H-38-1 & H-38-3; Bushing J: H-37-2 & H-38-2; Bushing N: H-37-1 & H-38-1; Bushing R: H-37-4 & H-38-9; Bushing S: H-37-4 & H-38-9 & H-38-10; Bushing U: H-37-3 & H-38-8)

For dimensional drawings see pages 3 & 4. For ordering information see page 5.
NOTE: Model 81/82 performance specifications do not apply to units subjected to printed circuit board cleaning procedures.
[1]Electrical specifications tested at 250 RPM, at room ambient: +25 °C nominal.

WARNING
Cancer and Reproductive Harm
www.P65Warnings.ca.gov

*RoHS Directive 2015/863, Mar 31, 2015 and Annex.
Specifications are subject to change without notice. Users should verify actual device performance in their specific applications. The products described herein and this document are subject to specific legal disclaimers as set forth on the last page of this document, and at www.bourns.com/docs/legal/disclaimer.pdf.

Rotary Switch Specifications

Initial Electrical Characteristics[1]

Contacts:
- DPST ..... N.O/N.O.,N.C./N.C. or N.O./N.C.

Power Rating (Resistive Load):
- DPST ..... 2 A @ 125 volts RMS-60 Hz or 2 A @ 28 VDC, 1 A @ 250 volts RMS-60 Hz

Contact Resistance (0.1 VDC-10 mA) ..... 10 milliohms nominal
Contact Bounce ..... 5 milliseconds maximum
Dielectric Withstanding Voltage (MIL-STD-202, Method 301)
- Sea Level ..... 1500 VAC minimum

Insulation Resistance ..... 1000 megohms minimum

Environmental Characteristics[1]

Operating Temperature Range ..... -40 °C to +70 °C
Storage Temperature Range ..... -65 °C to +125 °C
Vibration (Dual Section) ..... 8 G
- (Triple Section) ..... 5 G
- (Quadruple Section) ..... 3 G
- Contact Resistance ..... 10 milliohms maximum
- Contact Bounce ..... 0.1 millisecond maximum

Shock (Dual Section) ..... 20 G
- (Triple Section) ..... 15 G
- (Quadruple Section) ..... 10 G
- Contact Resistance ..... 10 milliohms maximum
- Contact Bounce ..... 0.1 millisecond maximum

Rotational Life ..... 25,000 cycles
- Switch Actuating Torque (50% Duty cycle @ Rated Power Load) ..... 1.41 to 4.94 N-cm (2 to 7 oz.-in.)
- Contact Resistance ..... 100 milliohms maximum

Moisture Resistance (MIL-STD-202, Method 106, Condition B)
- Contact Resistance (0.1 VDC-10 mA) ..... 10 milliohms maximum
- Insulation Resistance (After 24 Hours @ Room Temperature) (500 VDC) ..... 100 megohms minimum

Switch Housing Material ..... High temperature, flame retardant, thermosetting plastic

Mechanical Characteristics[1]

Actuating Torque (Each Section, Switch Module Only) ..... 3.53 to 10.6 N-cm (5 to 15 oz.-in.)
Running Torque (Out of Detent, 2-4 Module Assembly) ..... 0.21 to 1.41 N-cm (0.3 to 2 oz.-in.)
Detent ..... CW or CCW standard
Actuation Angle ..... 25 °
Contact Materials ..... Fine silver with gold overlay
Terminal Styles ..... Solder lug only
- Standard Orientation ..... In-line with control terminals
- Optional ..... Rotated 90 ° CCW from standard

Terminal Strength (Before and After Soldering Heat Exposure) ..... 0.9 Kg (2 lbs.) minimum

NOTE: Model 81/82 performance specifications do not apply to units subjected to printed circuit board cleaning procedures.
[1]Electrical specifications tested at 250 RPM, at room ambient: +25 °C nominal.

Specifications are subject to change without notice.
Users should verify actual device performance in their specific applications.
The products described herein and this document are subject to specific legal disclaimers as set forth on the last page of this document, and at www.bourns.com/docs/legal/disclaimer.pdf.

Product Dimensions

"A" Bushing
3/8 " (9.53 mm) Dia. Plain - Single Shaft

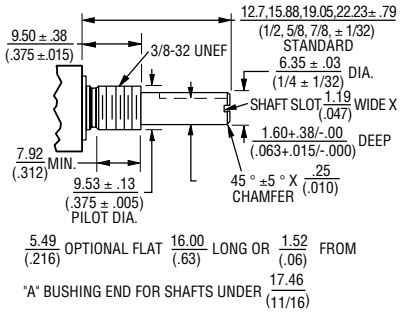

"B" Bushing
3/8 " (9.53 mm) Dia. Plain - Single Shaft

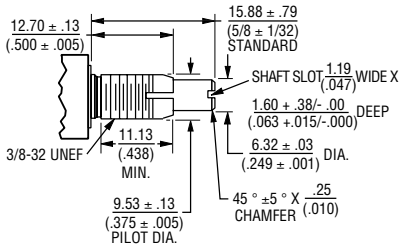

"C" Bushing
1/4 " (6.35 mm) Dia. Plain - Single Shaft

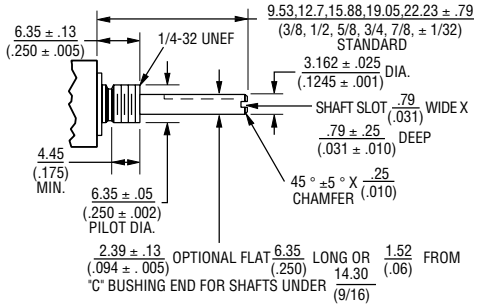

"E" Bushing
1/4 " (6.35 mm) Dia. Locking - Single Shaft

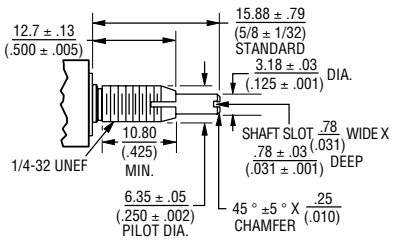

"A" Bushing
3/8 " (9.53 mm) Dia. Plain - Concentric Shaft

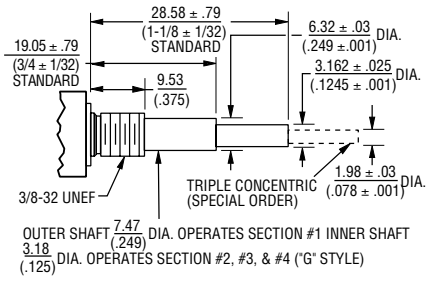

"C" Bushing
1/4 " (6.35 mm) Dia. Plain - Concentric Shaft

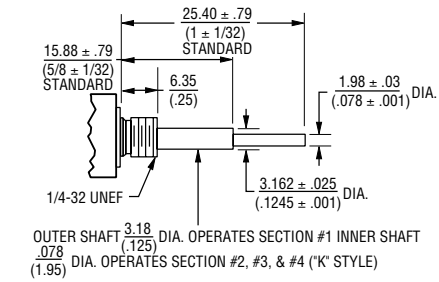

"S" Bushing
10 mm Dia. Locking - Single Shaft

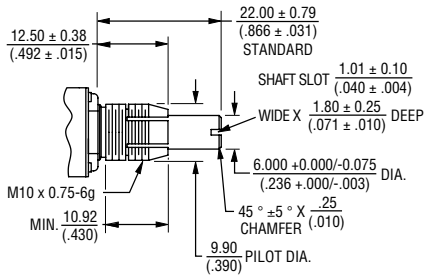

DIMENSIONS: MM / (INCHES)

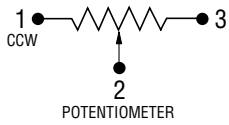

Specifications are subject to change without notice.
Users should verify actual device performance in their specific applications.
The products described herein and this document are subject to specific legal disclaimers as set forth on the last page of this document, and at www.bourns.com/docs/legal/disclaimer.pdf.

Product Dimensions

Dual Unit - PC Pins & J-Hook

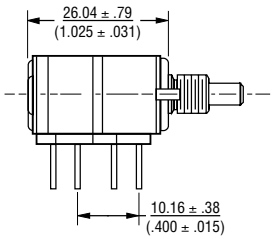

Triple Unit - PC Pins & J-Hook

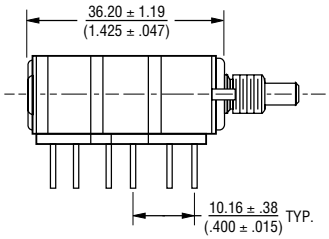

Quad Unit - PC Pins & J-Hook

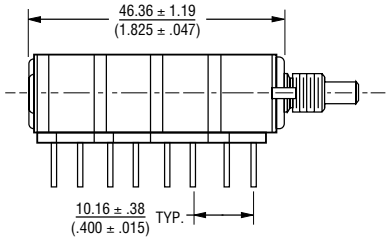

Model 81/82
Single Unit - PC Pins & J-Hook

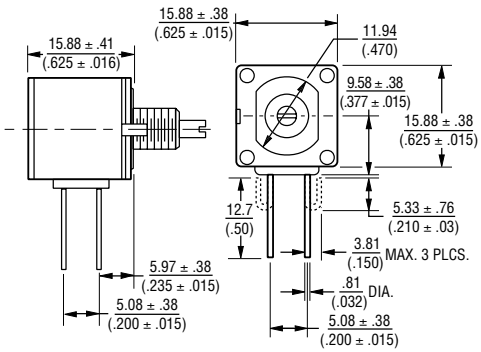

Terminal outlines shown as solid lines represent PC Pins, available on Model 81. Dashed line terminal outline represents "J" Hook, available on Model 82.

Model 81
Suggested PC Board Layout - PC Pins
(Single-Shaft Style Bottom View)

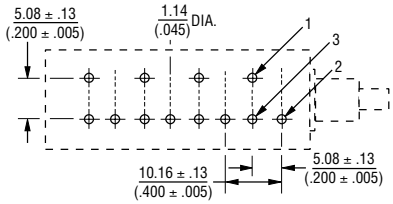

Note: For units with dual concentric shaft styles, a 2.54 (.100) spacer is added between the module(s) driven by the outer shaft and those driven by the inner shaft. For G, K, or V shafts, add the spacer between modules 1 and 2. For L or M shafts, add the spacer between modules 2 and 3. For N or P shafts, add the spacer between modules 3 and 4.

Shaft Flat Orientation*

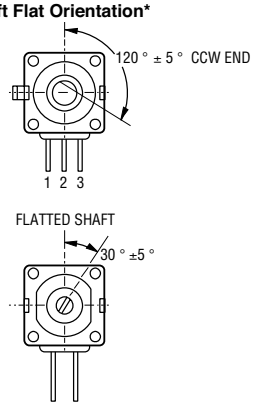

*EXCLUDES MODELS 83 AND 84

DIMENSIONS: MM / (INCHES)

Suggested Panel Layout

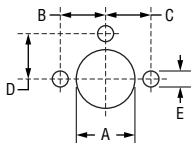

BUSHING	DIM A
A, B & J	9.91 (.39)
C, E & N	6.73 (.265)
R & S	10.5 (.413)
U	7.5 (.295)

DIMENSIONS: MM / (INCHES)

ANTI-ROTATION LUG	DIM B	DIM C	DIM D	DIM E
A	7.75 (.305)	N/A	N/A	2.49 (.098)
B	7.75 (.305)	7.75 (.305)	N/A	2.49 (.098)
C	N/A	7.75 (.305)	N/A	2.49 (.098)
E	13.49 (.531)	N/A	N/A	3.45 (.136)
F	N/A	N/A	7.75 (.305)	2.54 (.100)
J	9.53 (.375)	N/A	N/A	2.54 (.100)
K	9.53 (.375)	9.53 (.375)	N/A	2.54 (.100)

Specifications are subject to change without notice.
Users should verify actual device performance in their specific applications.
The products described herein and this document are subject to specific legal disclaimers as set forth on the last page of this document, and at www.bourns.com/docs/legal/disclaimer.pdf.

Product Dimensions

Primary Potentiometer Module
Model 85/86

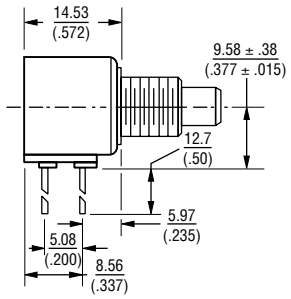

Secondary Potentiometer Module
Model 85/86

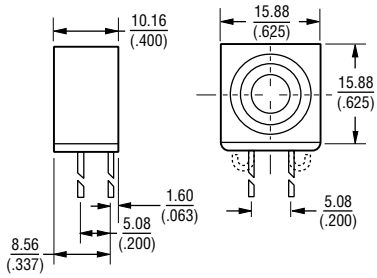

Shaft Flat Orientation*

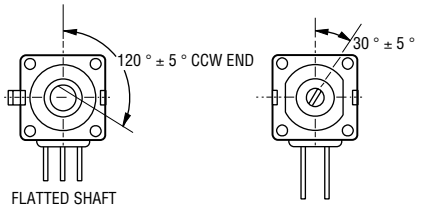

*EXCLUDES MODELS 83 AND 84

Switch Module
Model 85/86

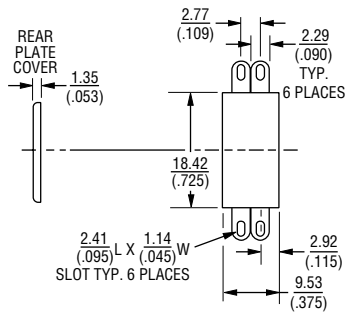

Assembly Sequence
Model 85/86
Secondary Potentiometer Module

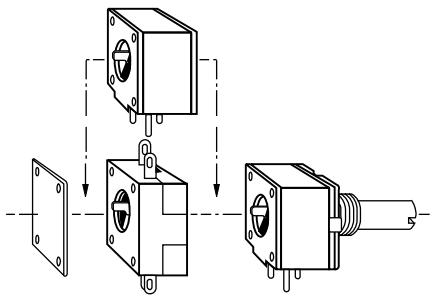

Switch Module Terminal Orientation

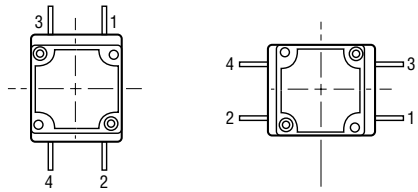



Switch contacts shown in detent position.

Locating Lug Options - All Model 80 Series

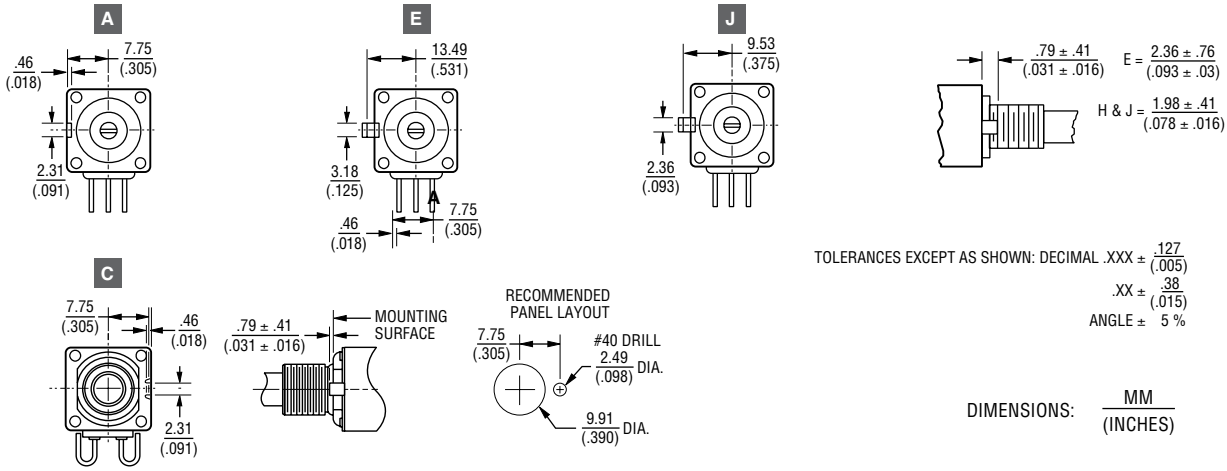

TOLERANCES EXCEPT AS SHOWN: DECIMAL .XXX ± .127 (.005)
.XX ± .38 (.015)
ANGLE ± 5 %

DIMENSIONS: MM / (INCHES)

NOTE: "D" OPTION - NO A/R LUG. OTHER LOCATING LUG OPTIONS AVAILABLE. CONSULT FACTORY FOR DETAILS.

Specifications are subject to change without notice.
Users should verify actual device performance in their specific applications.
The products described herein and this document are subject to specific legal disclaimers as set forth on the last page of this document, and at www.bourns.com/docs/legal/disclaimer.pdf.

Hardware

LOCKWASHER H-37-1

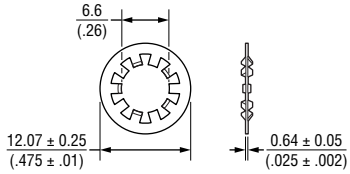

LOCKWASHER H-37-2

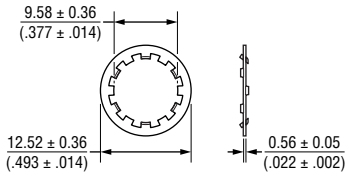

LOCKWASHER H-37-3

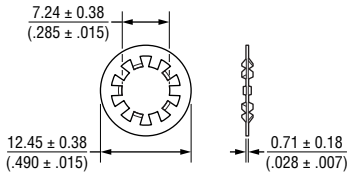

LOCKWASHER H-37-4

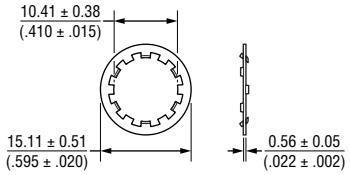

Date Code Description

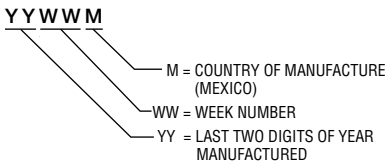

NUT H-38-1

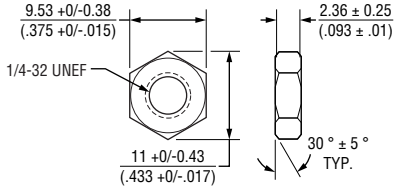

NUT H-38-2

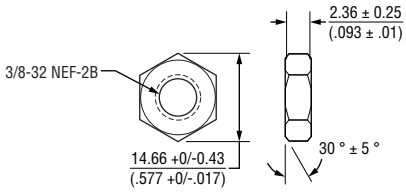

NUT H-38-8

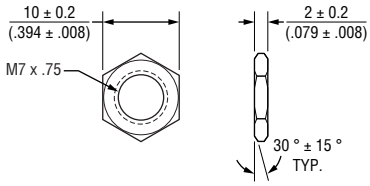

NUT H-38-9

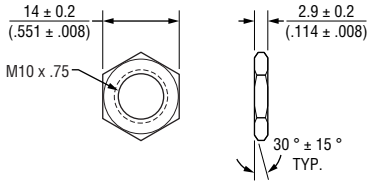

NUT H-38-14

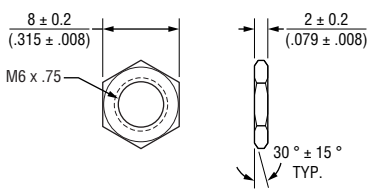

DIMENSIONS: MM / (INCHES)

LOCKNUT H-38-3

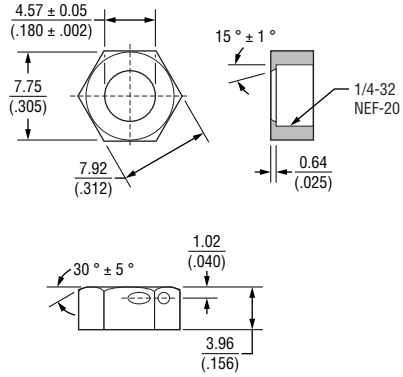

LOCKNUT H-38-4

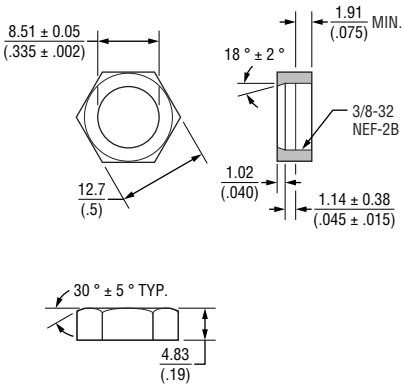

LOCKNUT H-38-10

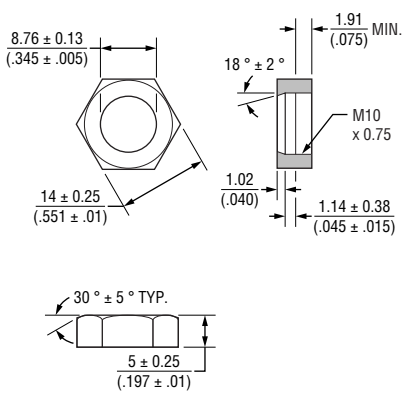

Specifications are subject to change without notice.
Users should verify actual device performance in their specific applications.
The products described herein and this document are subject to specific legal disclaimers as set forth on the last page of this document, and at www.bourns.com/docs/legal/disclaimer.pdf.

81/82 – 5/8 ˝ Square Single-Turn Panel Control
85/86 – 5/8 ˝ Square Single-Turn Panel Control with Rotary Switch

BOURNS®

How To Order

81	A	2	A	-	B	28	-	A	15	/	A15	L
85	A	2	A	-	B	28	-	A	15	/	R51	L

Models 81 & 82: Part number for multiple section potentiometers must have a taper and resistance value for each section.

Models 85 & 86: Part number must contain a switch type.

MODEL	
81	**Single-Turn, PC Pins**
82	**Single-Turn, J-Hooks**
85	Single-Turn, Pot/Rotary Switch, PC Pins
86	Single-Turn, Pot/Rotary Switch, J-Hooks

# SECTIONS		APPLICABLE MODELS
1	**Single**	**81,82**
2	**Double**	**81,82,85,86**
3	Triple	81,82,85,86
4	Quad	81,82,85,86

BUSHING	
A	**Plain 3/8 ” (9.53 mm) D x 3/8 ” (9.53 mm) L**
B	Locking 3/8 ” (9.53 mm) D x 1/2 ” (12.7 mm) L
C	**Plain 1/4 ” (6.35 mm) D x 1/4 ” (6.35 mm) L**
E	Locking 1/4 ” (6.35 mm) D x 1/2 ” (12.7 mm) L
J	Plain 3/8 ” (9.53 mm) D x 1/4 ” (6.35 mm) L
N	Plain 1/4 ” (6.35 mm) D x 3/8 ” (9.53 mm) L
R	**Plain 10 mm D x 9 mm L**
S	Locking 10 mm D x 12.5 mm L
U	Plain 7 mm D x 6 mm L

ANTI-ROTATION LUG	
A	**Single .305 R, 90 °CW**
B	Double .305 R, 90 ° & 270 °CW
C	Single .305 R, 270 °CW
D	**No Lug**
E	Single .531 R, 90 °CW
F	Single .305 R, 180 °CW
J	Single .375 R, 90 °CW
K	Double .375 R, 90 ° & 270 °CW

SHAFT LENGTH (FMS)		AVAILABLE ONLY IN BUSHING
Code	Description	Code
12	3/8 ” L	C, N, J
16	1/2 ” L	A, C, J, N
20	5/8 ” L	A, B, C, E, J, N
24	**3/4 ” L**	A, B, C, E, J, N
28	**7/8 ” L**	A, B, C, E, J, N
32	1 ” L	A, B, C, E, J, N
36	1-1/8 ” L	A, B, C, E, J, N
40	1-1/4 ” L	A, B, C, E, J, N
Metric		
10	10 mmL	U
13	13 mmL	U
16	16 mmL	R, S
19	19 mmL	R, S
22	**22 mmL**	R, S, U
30	30 mmL	R, S
42	42 mmL	R, S
50	50 mmL	R, S

SHAFT TYPE		AVAILABLE ONLY IN LENGTHS (CODE)	AVAILABLE ONLY IN BUSHINGS (CODE)
A	Single Plain 1/4 ” (6.35 mm) D	16,20,24,28	A, B, J
B	**Single Slotted 1/4 ” (6.35 mm) D**	**16,20,24,28**	**A, B, J**
C	Single Flatted 1/4 ” (6.35 mm) D	20,24,28	A, B, J
E	**Single Slotted 1/8 ” (3.18 mm) D**	**12,16,20,24,28**	**C, E, N**
F	Single Flatted 1/8 ” (3.18 mm) D	24	C, N
G	Dual Concentric Plain 1/4 ” (6.35 mm) D - 1/8 ” (3.18 mm) D Outer Operates Section 1	36,40	A, J
K	Dual Concentric Plain 1/8 ” (3.18 mm) D - 5/64 ” (1.98 mm) D Outer Operates Section 1	32,36	C, N
L	Dual Concentric Plain 1/4 ” (6.35 mm) D - 1/8 ” (3.18 mm) D Outer Operates Section 1/2	36,40	A, J
M	Dual Concentric Plain 1/8 ” (3.18 mm) D - 5/64 ” (1.98 mm) D Outer Operates Section 1/2	32,36	C, N
N	Dual Concentric Plain 1/4 ” (6.35 mm) D - 1/8 ” (3.18 mm) D Outer Operates Section 1/2/3	36,40	A, J
P	Dual Concentric Plain 1/8 ” (3.18 mm) D - 5/64 ” (1.98 mm) D Outer Operates Section 1/2/3	32,36	C, N
R	**Single Slotted 6 mm D**	**16,19,22,50**	**R, S**
T	Single Slotted 4 mm D	10, 13, 22	U
V	Dual Concentric Plain 6 mm D - 3 mm D Outer Operates Section 1	30, 42	R

RoHS IDENTIFIER	
L	Compliant

SWITCH TYPE (MODELS 85 & 86 ONLY)	
(R50)	DPST N.O./N.C. CW Detent In-Line Term
(R51)	**DPST N.O./N.C. CCW Detent In-Line Term**
(R52)	DPST N.O./N.O. CW Detent In-Line Term
(R53)	DPST N.O./N.O. CCW Detent In-Line Term
(R56)	DPST N.O./N.C. CW Detent Horz Term
(R57)	DPST N.O./N.C. CCW Detent Horz Term
(R58)	DPST N.O./N.O. CW Detent Horz Term
(R59)	DPST N.O./N.O. CCW Detent Horz Term

ELEMENT TAPER TYPE/TOLERANCE		RESISTANCE CODE VALUE IN OHMS	
(A)	**Linear Cermet ±10 %**	(05) - 100	(30) - 15 K
(H)	Linear Cermet ±5 %	(28) - 150	(16) - 20 K
		(06) - 200	(17) - 25 K
		(07) - 250	**(18) - 50 K**
		(08) - 500	(19) - 75 K
		(09) - 750	**(20) - 100 K**
		(10) - 1 K	(31) - 150 K
		(29) - 1.5 K	(21) - 200 K
		(11) - 2 K	(22) - 250 K
		(12) - 2.5 K	(23) - 500 K
		(13) - 5 K	(24) - 750 K
		(14) - 7.5 K	(25) - 1 M
		(15) - 10 K	
(B)	**Linear C-P ±20 %**	**(10) - 1 K**	**(18) - 50 K**
(E)	Linear C-P ±10 %	(12) - 2.5 K	**(20) - 100 K**
		(13) - 5 K	(22) - 250 K
		(15) - 10 K	(23) - 500 K
		(16) - 20 K	(25) - 1 M
		(17) - 25 K	
(C)	CW Audio Cermet ±10 %	**(10) - 1 K**	**(18) - 50 K**
(D)	**CW Audio C-P ±20 %**	(12) - 2.5 K	**(20) - 100 K**
(F)	CCW Audio Cermet ±10 %	**(13) - 5 K**	(22) - 250 K
(G)	CCW Audio C-P ±20 %	**(15) - 10 K**	(23) - 500 K
(S)	CW Audio C-P ±10 %	(17) - 25 K	(25) - 1 M
(T)	CCW Audio C-P ± 10 %		

Boldface features are Bourns standard options. All others are available with higher minimum order quantities.

BOURNS®

Asia-Pacific: Tel: +886-2 2562-4117
Email: asiacus@bourns.com

EMEA: Tel: +36 88 885 877
Email: eurocus@bourns.com

The Americas: Tel: +1-951 781-5500
Email: americus@bourns.com

www.bourns.com

REV. 10/20

Specifications are subject to change without notice.
Users should verify actual device performance in their specific applications.
The products described herein and this document are subject to specific legal disclaimers as set forth on the last page of this document, and at www.bourns.com/docs/legal/disclaimer.pdf.

Legal Disclaimer Notice

BOURNS®

This legal disclaimer applies to purchasers and users of Bourns® products manufactured by or on behalf of Bourns, Inc. and its affiliates (collectively, "Bourns").

Unless otherwise expressly indicated in writing, Bourns® products and data sheets relating thereto are subject to change without notice. Users should check for and obtain the latest relevant information and verify that such information is current and complete before placing orders for Bourns® products.

The characteristics and parameters of a Bourns® product set forth in its data sheet are based on laboratory conditions, and statements regarding the suitability of products for certain types of applications are based on Bourns' knowledge of typical requirements in generic applications. The characteristics and parameters of a Bourns® product in a user application may vary from the data sheet characteristics and parameters due to (i) the combination of the Bourns® product with other components in the user's application, or (ii) the environment of the user application itself. The characteristics and parameters of a Bourns® product also can and do vary in different applications and actual performance may vary over time. Users should always verify the actual performance of the Bourns® product in their specific devices and applications, and make their own independent judgments regarding the amount of additional test margin to design into their device or application to compensate for differences between laboratory and real world conditions.

Unless Bourns has explicitly designated an individual Bourns® product as meeting the requirements of a particular industry standard (e.g., ISO/TS 16949) or a particular qualification (e.g., UL listed or recognized), Bourns is not responsible for any failure of an individual Bourns® product to meet the requirements of such industry standard or particular qualification. Users of Bourns® products are responsible for ensuring compliance with safety-related requirements and standards applicable to their devices or applications.

Bourns® products are not recommended, authorized or intended for use in nuclear, lifesaving, life-critical or life-sustaining applications, nor in any other applications where failure or malfunction may result in personal injury, death, or severe property or environmental damage. Unless expressly and specifically approved in writing by two authorized Bourns representatives on a case-by-case basis, use of any Bourns® products in such unauthorized applications might not be safe and thus is at the user's sole risk. Life-critical applications include devices identified by the U.S. Food and Drug Administration as Class III devices and generally equivalent classifications outside of the United States.

Bourns expressly identifies those Bourns® standard products that are suitable for use in automotive applications on such products' data sheets in the section entitled "Applications." Unless expressly and specifically approved in writing by two authorized Bourns representatives on a case-by-case basis, use of any other Bourns® standard products in an automotive application might not be safe and thus is not recommended, authorized or intended and is at the user's sole risk. If Bourns expressly identifies a sub-category of automotive application in the data sheet for its standard products (such as infotainment or lighting), such identification means that Bourns has reviewed its standard product and has determined that if such Bourns® standard product is considered for potential use in automotive applications, it should only be used in such sub-category of automotive applications. Any reference to Bourns® standard product in the data sheet as compliant with the AEC-Q standard or "automotive grade" does not by itself mean that Bourns has approved such product for use in an automotive application.

Bourns® standard products are not tested to comply with United States Federal Aviation Administration standards generally or any other generally equivalent governmental organization standard applicable to products designed or manufactured for use in aircraft or space applications. Bourns expressly identifies Bourns® standard products that are suitable for use in aircraft or space applications on such products' data sheets in the section entitled "Applications." Unless expressly and specifically approved in writing by two authorized Bourns representatives on a case-by-case basis, use of any other Bourns® standard product in an aircraft or space application might not be safe and thus is not recommended, authorized or intended and is at the user's sole risk.

The use and level of testing applicable to Bourns® custom products shall be negotiated on a case-by-case basis by Bourns and the user for which such Bourns® custom products are specially designed. Absent a written agreement between Bourns and the user regarding the use and level of such testing, the above provisions applicable to Bourns® standard products shall also apply to such Bourns® custom products.

Users shall not sell, transfer, export or re-export any Bourns® products or technology for use in activities which involve the design, development, production, use or stockpiling of nuclear, chemical or biological weapons or missiles, nor shall they use Bourns® products or technology in any facility which engages in activities relating to such devices. The foregoing restrictions apply to all uses and applications that violate national or international prohibitions, including embargos or international regulations. Further, Bourns® products and Bourns technology and technical data may not under any circumstance be exported or re-exported to countries subject to international sanctions or embargoes. Bourns® products may not, without prior authorization from Bourns and/or the U.S. Government, be resold, transferred, or re-exported to any party not eligible to receive U.S. commodities, software, and technical data.

To the maximum extent permitted by applicable law, Bourns disclaims (i) any and all liability for special, punitive, consequential, incidental or indirect damages or lost revenues or lost profits, and (ii) any and all implied warranties, including implied warranties of fitness for particular purpose, non-infringement and merchantability.

For your convenience, copies of this Legal Disclaimer Notice with German, Spanish, Japanese, Traditional Chinese and Simplified Chinese bilingual versions are available at:

Web Page: http://www.bourns.com/legal/disclaimers-terms-and-policies

PDF: http://www.bourns.com/docs/Legal/disclaimer.pdf