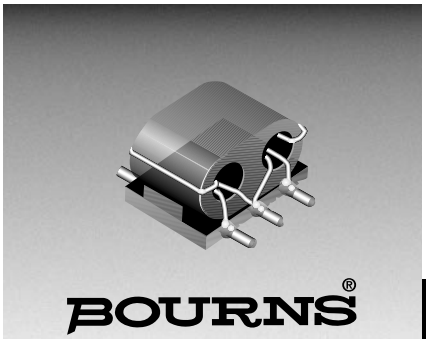

Features

- SMD gull-wing (two sizes)
- High frequency
- Low Z tolerance ±10%

Applications

- Single antenna systems
- Master antenna systems
- Wideband communication systems
- SAT-systems
- Digital satellite broadcasting
- Used in antenna amplifiers

BRN Series - Chip Balun Transformers

Dimensions

	A	B	C	E	F
BRN-SBC-108	6.0 ±0.3 (.236±.012)	6.5 ±0.5 (.256±.020)	4.2 ±0.5 (.165±.020)	2.0 ±0.2 (.079±.008)	5.8 ±0.3 (.228±.012)

Configuration

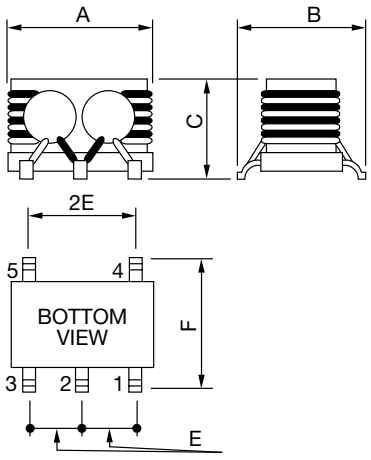

DIMENSIONS ARE: METRIC / (INCHES)

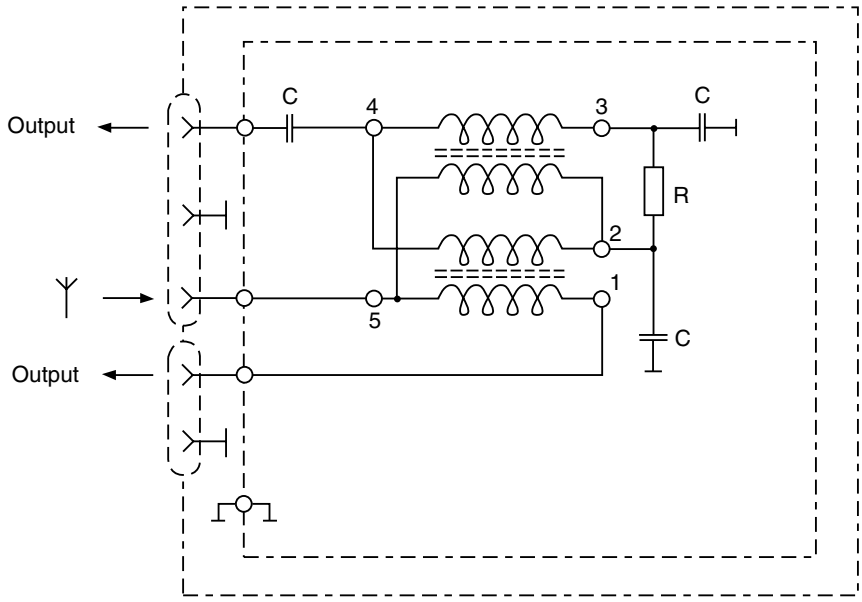

Direct distribution of high frequency energy by directional couplers

Schematic

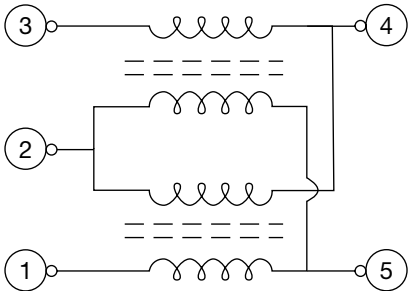

Electrical Data Z (4-5)

BRN-SBC-108

47 MHz.....160Ω
230 MHz.....270Ω
470 MHz.....275Ω
860 MHz.....290Ω

Specifications are subject to change without notice.

Chip Balun Transformer Packaging Specifications

BOURNS®

Packaging Specifications

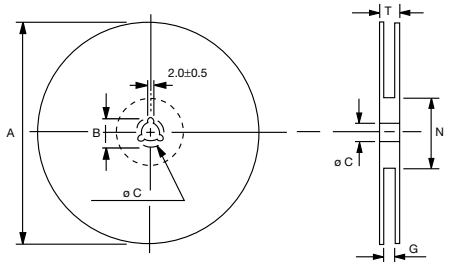

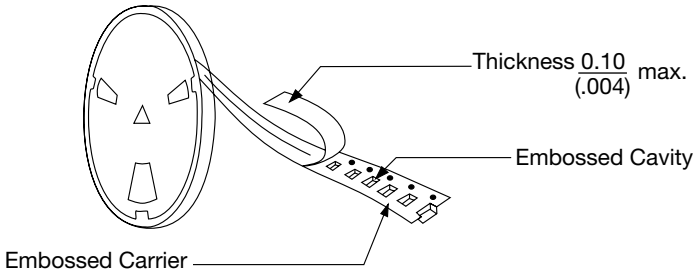

Reel Dimensions

Model	Tape Size	A	B	C	G	N	T	Packaging
BRN-SBC-108	16 (.63)	178 (7.008)	24.0 ±1 (.945±.039)	13.0±0.5 (.512±.020)	18 (.709)	50^{-0} (1.969^{-0})	22.4 (.882)	500 pcs. per Reel

DIMENSIONS ARE: METRIC / (INCHES)

Strength Of Cover Tape

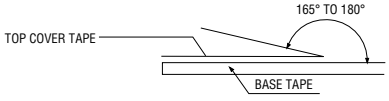

The force for tearing off cover tape is 10 to 130 grams in the arrow direction.

Materials

Paper
Plastics

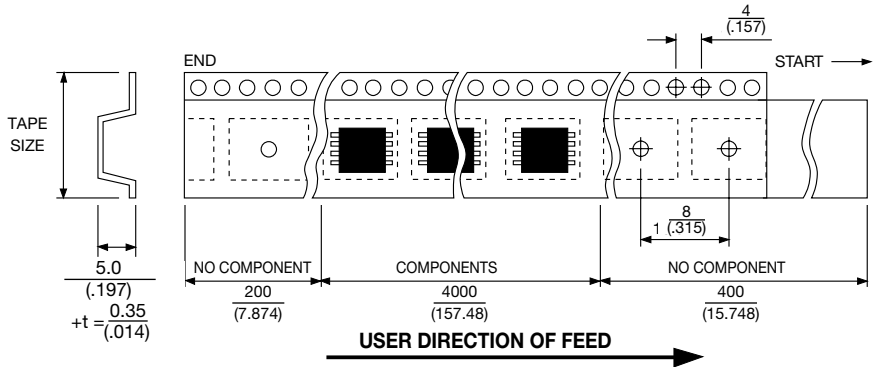

Specifications are subject to change without notice.