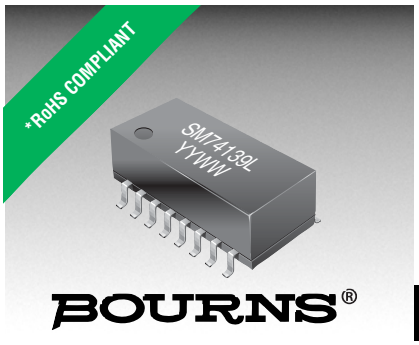

Features

- Surface mount
- Dual transformer for transmit and receive
- 1500 VAC HIPOT
- RoHS compliant*

Applications

- Telecom

SM74139L - T1/CEPT/ISDN-PRI Dual Transformer

Electrical Specifications @ 25 °C

Primary Pins
Core A 1-3
Core B 6-8
Ratio (±2 %)
Core A & B .....1CT : 1.15CT
OCL (mH) min.
Core A & B 1.2
Leakage Inductance (µH) max.
Core A & B 0.60
Cww (pF) max.
Core A & B 30
DCR of primary (Ω) max.
Core A & B 0.70
DCR of secondary (Ω) max.
Core A & B 0.75
Operating Temperature (°C).....0 to +70

*CT : center tap

Packaging Specifications

Tape & Reel* .....700 pcs./reel

*"E" suffix before "L" in part number designates tape & reel packaging, e.g. SM74139EL.

How To Order

SM74139E L

Model

Termination
L = Tin only (RoHS Compliant)

Electrical Schematic

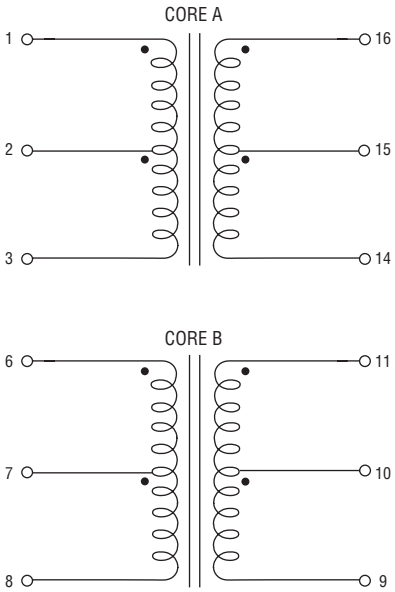

Product Dimensions

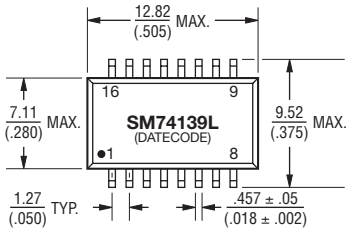

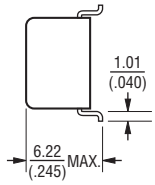

DIMENSIONS: MM / (INCHES)

TOLERANCE: ± 0.254 / (.010)

REV. 06/11

*RoHS Directive 2002/95/EC Jan 27, 2003 including Annex.
Specifications are subject to change without notice.
Customers should verify actual device performance in their specific applications