PX0867/2M00 Datasheet

Product Name // Overmoulded HDMI Cable PX0867 Series
HDMI Standard Plug to Sealed Plug 2m Cable

View Product Page



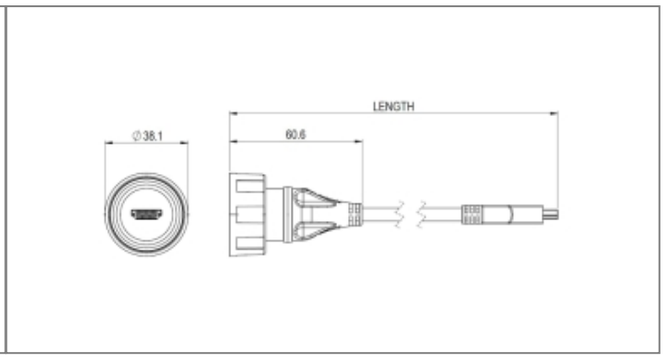

// Product Description:

- Pre-Wired Overmoulded HDMI Cable
- Water and dustproof to IP68 when mated with compatible connector
- HDMI 2.1 with Ethernet Specification
- Standard HDMI plug to Sealed Standard HDMI plug
- 2m Cable Length
- PX0835 Sealing Cap available separately to maintain IP rating of unmated connectors
- Mate with PX08 Standard HDMI Series Panel Mount Connectors

// General Information:

Product Display Title:	Pre-Wired Overmoulded HDMI Cable
Product Family:	Circular Data Connectors
Product Series:	Standard Buccaneer - HDMI
Body Colour:	Black
Body Material:	PVC
Body Material Type:	Plastic Body
Cable Length:	2m
Contact Type:	Plug Contact
Coupling Type:	Screw
Current Max:	0.5A
Data Cable Type:	HDMI Standard Plug to Sealed Plug
Diameter Over Coupling Ring Mm:	38.1mm
Durability:	1000 cycles
Flamability Rating:	UL94V-0
Function:	Flex to Standard Connector Double Ended Cable
Ip Rating:	IP68, IP69K
Max Operating Temperature:	+80°C
Min Operating Temperature:	-25°C
Number Of Contacts:	19 Contacts
Rohs Compliant:	Yes
Salt Spray Corrosion Test:	EN60068-2-52 Test Kb Salt Mist (Cyclic) Marine Severity Level 1
Sheath Colour:	Black
Sheath Material:	PVC
Voltage Max:	30V

// Product PDF Links

Standard Series HDMI connectors...

// Product 3D CAD Model Links

PX0867/2M003D CAD Model

Have a question or project enquiry
o talk to us about?

Click Here To Contact Us