MDMA SERIES

Microminiature connectors
with removable crimp contacts
ESCC 3401/077 - ESCC 3401/078

Features and Benefits

- Compliant with ESA specifications
- High performance Micropin™ contact system ("twist pin" spring male contact and tubular socket contact)
- Removable crimp type contacts
- Harnesses length flexibility
- Non-Outgassing
- Low Size Connectors
- Low Weight

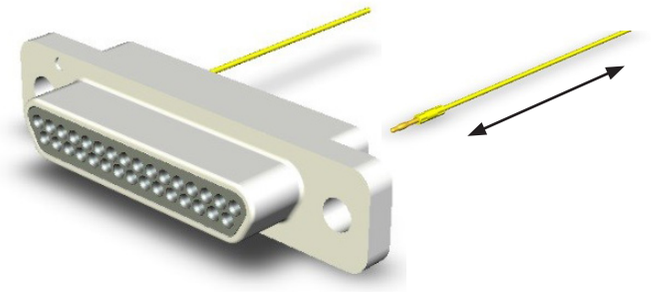

Typical Applications

- Space equipment
- Satellites harnesses and payloads
- Avionics / Military

Specification

- High performance Micro-miniature connectors ESA qualified, for space applications.
- Compliant to ESCC specifications 3401/077 Connectors and 3401/078 Removable Crimp Contacts.
- Compatible with ESCC 3401/029 MDM Connectors, 3401/041 Savers, 3401/032 Accessories and 3401/087 Backshells.
- Suitable for use in Space, and high performance military/aerospace applications: Board to Board, Board to Cable or Cable to Cable applications.
- Removable contacts (Twist Pin contact technology).
- Sizes available: 9, 15, 21, 25, 31, 37 and 51 ways.
- Connector 9, 15, 21, 25, 31 and 37 ways, accepted wires size:
  - 1 wire insulated AWG24, AWG26 and AWG28 (external diameter at 0.97mm max).
  - 1 uninsulated solid wire AWG25.
  - 2 wires insulated AWG28 (external diameter at 0.82mm max).
- Connector 51 ways, accepted wires size:
  - 1 wire insulated AWG24, AWG26 and AWG28 (external diameter at 0.97mm max).
  - 1 uninsulated solid wire AWG25.
- Distance between 2 adjacent contacts: 1.27mm (.050 inch).
- Distance between 2 contacts rows: 1.09mm (.043 inch).

Electrical & Mechanical Characteristics

CHARACTERISTIC	SPECIFICATION
Working Voltage (sea level)	150 Vrms
Rated Current AWG 24	3.5 A
Rated Current AWG 25	2.5 A
Rated Current AWG 26	2.5 A
Rated Current AWG 28	1.5 A
Contact Resistance	5 mΩ (rated current)
Insulation Resistance	5000 MΩ min
Voltage Proof	600 Vrms /2.0mA (leakage current)
Temperature range	-55/+125 °C
Contact Retention Force	22.25 N max

TYPE	MATING/UNMATING FORCE (N MAX)	UNMATING FORCE (N MIN)	WEIGHT (G)
Size 9	20	1.3	2.3
Size 15	33	2.0	3.1
Size 21	47	2.9	3.9
Size 25	55	3.5	4.4
Size 31	69	4.3	5.2
Size 37	82	5.1	6.0
Size 51	147	7.1	7.3

Quality Level

- ESA / ESCC: code 3401 (Flying model).
- Qualification reviewed every 2 years.

Process Contact and Cable Insertion

- Wire stripping.
- Cables crimping onto contacts with standard MDMA Crimping tool M22520/2-01 and dedicated locators (to be ordered separately).
- Wires cable installed by the end user.

Test Retention

- A dedicated tool is available to make the retention test of each contacts in the connectors.

Process Contact and Cable Extraction

- A dedicated tool is available to remove the contacts from the connectors.

Options

- Optional interfacial seal can be applied for female connectors (to be ordered separately).
- Optional captive nuts or float mounting.

Packaging

- Individual packaging.
- Traceability associated as per ESA/ESCC specifications.
- Each MDMA connector is sold with a dust cap in individual plastic bag.
- Contact extraction tool has to be ordered separately.

HOW TO ORDER

CONNECTOR

Our easy build-a-connector concept allows you to mix and match options to create the MDMA you need. To order, select desired option from each category and place it in the appropriate box.



Pin connection with Nickel Plating



Pin connection with Gold Plating

ESA/ESCC Specification: | 3401077 | 01 | B | | MDMA | Y | 9 | P | - | FO |

Detail Specification Number

Shell Finish
01 25.4 µm Ni
02 0.7 µm Au over 25.4 µm Ni

Testing Level

MDMA Series

Fixing Option
Nothing: Standard (no hardware)
E Captive nut
Y Float mount

Contacts Information
FO Connector without contacts
(Contacts must be ordered separately)

Type of Contact
P Pin (Male)
S Socket (Female)

Shell Size
9
15
21
25
31
37
51

MATERIALS & FINISHES

COMPONENT	MATERIAL	FINISH
Shell	Aluminium alloy	**01:** 25.4 µm electroless Nickel over Copper underlay
		02: 0.7 µm Gold over 25.4 µm electroless Nickel
Insulator	Liquid Crystal Polymer	UL 94-V0, Glass-filled, Black Color
Female Contacts	Copper Alloy	1.27 µm Gold over Copper underlay
Male Contacts	Copper Alloy	1.27 µm Gold over Copper underlay
Accessories (Y & E)	Stainless Steel	303 type, passivated
Interfacial Seals	Fluorosilicone elastomer	Pink color
Dust Cap	Polyethylene	Black color, antistatic.

CONNECTOR DIMENSIONS

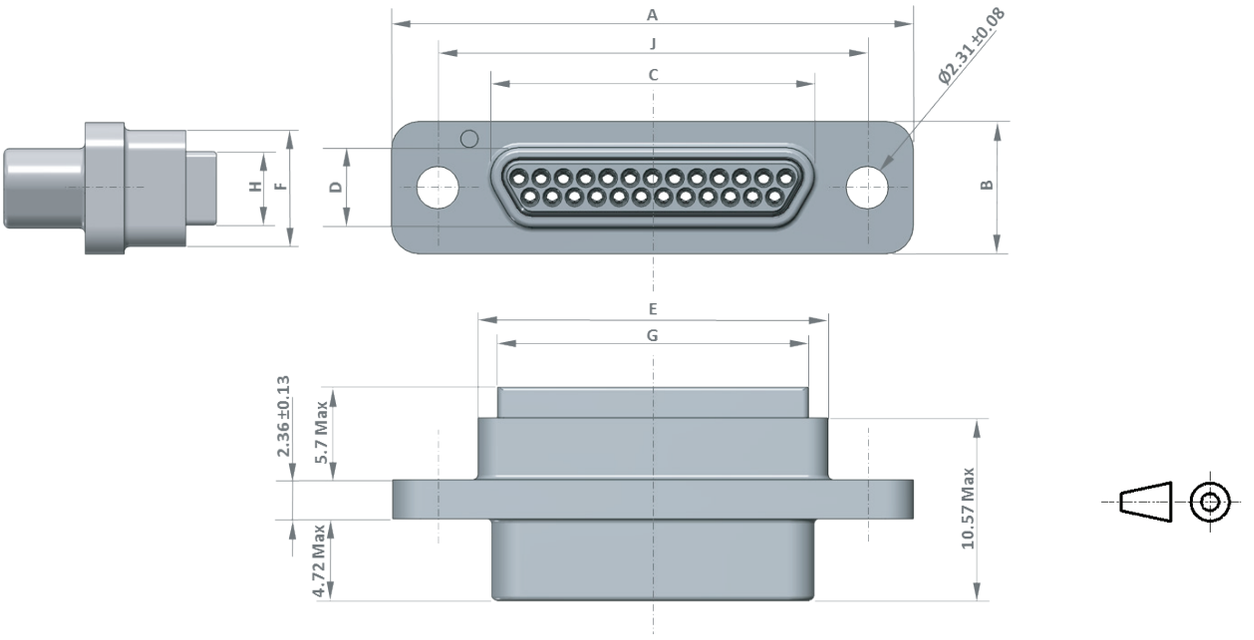

SHELL SIZE	A ±0.25	B ±0.22	C ±0.14	E ±0.25	E ±0.25	F ±0.13	G ±0.13	J ±0.13
9P	19.68	7.60	8.31	4.69	9.91	6.63	7.63	14.35
9S	19.68	7.60	9.89	6.38	9.91	6.63	7.63	14.35
15P	23.50	7.60	12.12	4.69	13.72	6.63	11.44	18.16
15S	23.50	7.60	13.70	6.38	13.72	6.63	11.44	18.16
21P	27.30	7.60	15.93	4.69	17.53	6.63	15.25	21.97
21S	27.30	7.60	17.51	6.38	17.53	6.63	15.25	21.97
25P	29.84	7.60	18.47	4.69	20.07	6.63	17.79	24.51
25S	29.84	7.60	20.05	6.38	20.07	6.63	17.79	24.51
31P	33.65	7.60	22.28	4.69	23.88	6.63	21.60	28.32
31S	33.65	7.60	23.86	6.38	23.88	6.63	21.60	28.32
37P	37.46	7.60	26.09	4.69	27.69	6.63	25.41	32.13
37S	37.46	7.60	27.67	6.38	27.69	6.63	25.41	32.13
51P	36.20	8.70	24.83	5.78	26.42	7.65	24.14	30.86
51S	36.20	8.70	26.41	7.47	26.42	7.65	24.14	30.86

ATTACHMENT OPTIONS

Captive Nut (Option E)

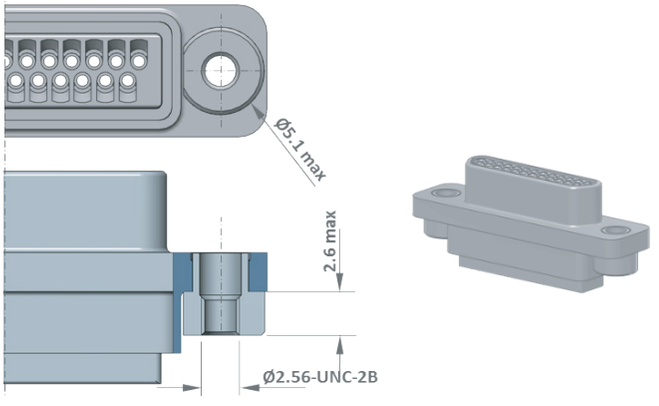

Floating Mount (Option Y)

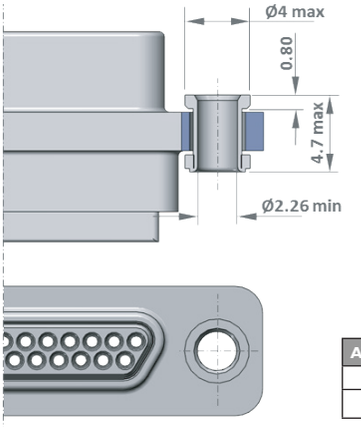

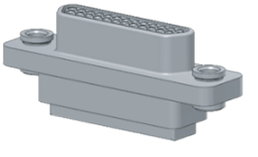

ALLOWABLE FLOAT	(MM)
Lateral	0.40
Axial	0.40

Dimensions shown in: mm
Specifications and dimensions subject to change

CONTACT PIN – 340107803B (WIRE SIZE AWG 24, 25, 26, 28 OR 2X28)

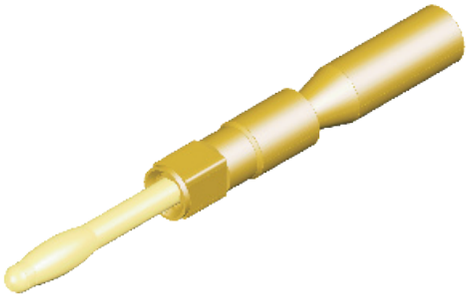

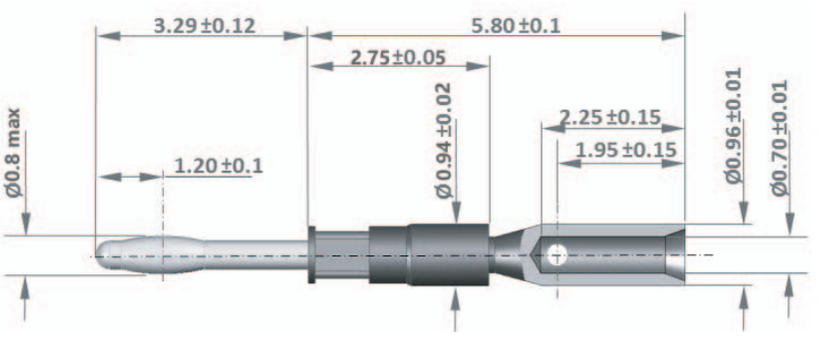

C&K Part Number: **C331-8754-000H**

ESA/ESCC Description: **340107803B**

COMPONENT	MATERIAL	FINISH
Sleeve	Copper alloyed	1.27 µm min. Gold over Copper underlay
Bundle	Cupro-Beryllium	1.27 µm min. Gold over Copper underlay

CONTACT SOCKET – 340107804B (WIRE SIZE AWG 24, 25, 26, 28 OR 2X28)

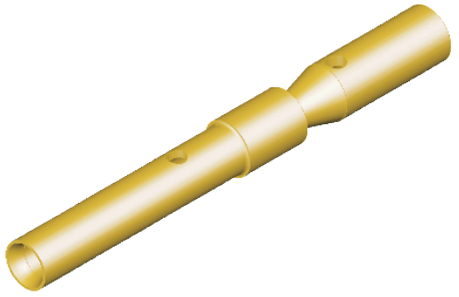

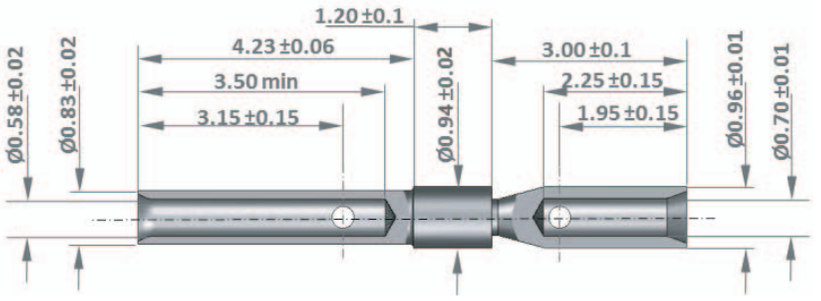

C&K Part Number: **C252-8844-000H**

ESA/ESCC Description: **340107804B**

COMPONENT	MATERIAL	FINISH
Sleeve	Copper alloyed	1.27 µm min. Gold over Copper underlay

Nota:

Other products available:

- Male Contact 340107801B, compatible with wire size AWG 25, 26 or 28.
- Female Contact 340107802B, compatible with wire size AWG 25, 26, 28.

PROCESS – CONTACT AND CABLE INSERTION

Cable Crimping



1 – Insert wire into contact body.

2 – Insert the unit into the crimping tool (selector position 2) with dedicated locator.

Crimping tool - Position #2:
M22520/2-01 (P/N: C995-0001-584)



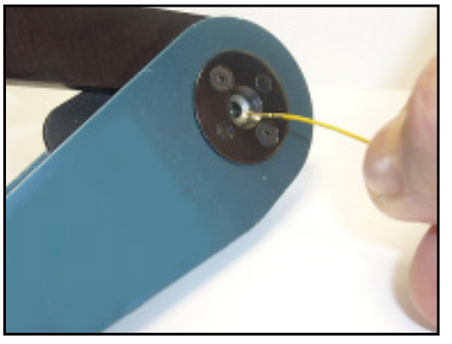



Locator for Male Contact:
MDMA-Locator-P-01 (P/N: C115373-0001)
Locator for Female Contact:
MDMA-Locator-S-01 (P/N: C115373-0002)

Contact Insertion

Insert contact with wire into rear insulator cavity until positive stop.

To avoid stress onto retention clip, insert contact in the axis (no insertion angle).

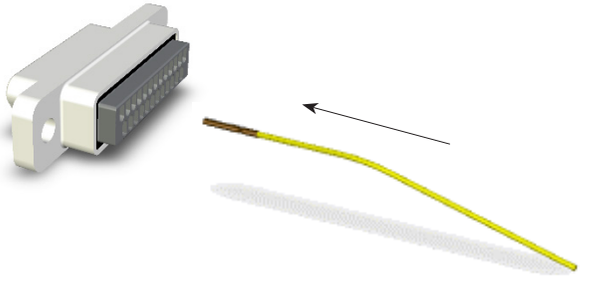

To be sure contact is locked securely, pull back lightly on wire or use calibrated test retention tool.
MDMA-Retention tool (P/N: C115373-0003).

PROCESS – CONTACT AND CABLE EXTRACTION

1 – Select contact extraction tool:
- Connector size 9 to 37 ->MDMA-Extract tool-01 (P/N: C115373-0006)
- Connector size 51 ->MDMA-Extract tool-02 (P/N: C115373-0007)



2 – Insert tool tip into contact cavity until tip bottoms against contact shoulder, releasing tine.
Hold wire against tool with finger and remove tool and contact.

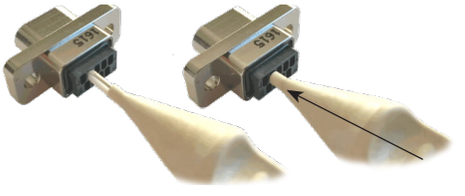

Be careful to put extraction tool in the good position!
Each contact cavity has flat area to place tool tip.



Connector size 9 to 37

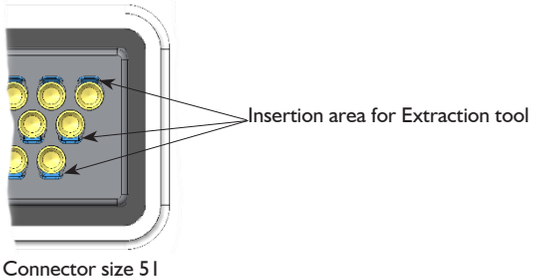

Connector size 51

Dimensions shown in: mm
Specifications and dimensions subject to change

PROCESS – RETENTION TEST

Use Retention Test Tool - P/N C115373-0003

This tool is equipped with 2 test tips at the ends for use with Pin and Socket connectors.
It is delivered with:

- 2 protective caps
- 1 adaptator for connectors MDMA-51S

1 calibration certificate referring to applicable force and travel

If necessary, we can perform the calibration of tools already in service.
Use P/N C115373-0003 CA for a quote.

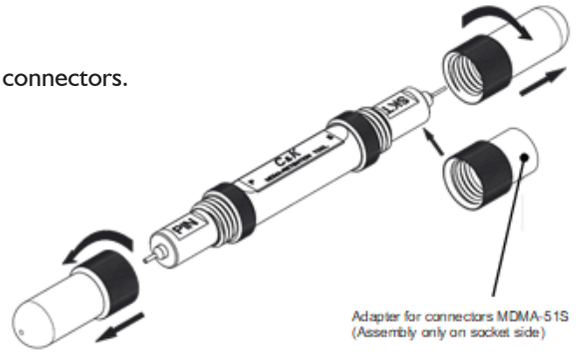

MDMA Connector with Pin Contacts:

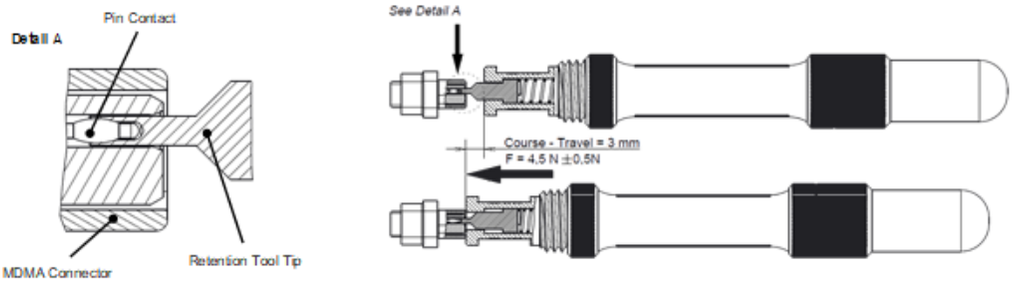

Insert the tip of the tool around the Pin contact
Push the tool up to the stop with the front face of the connector
Pull back lightly on wire to be sure contact is locked securely

MDMA Connector with Socket Contacts:

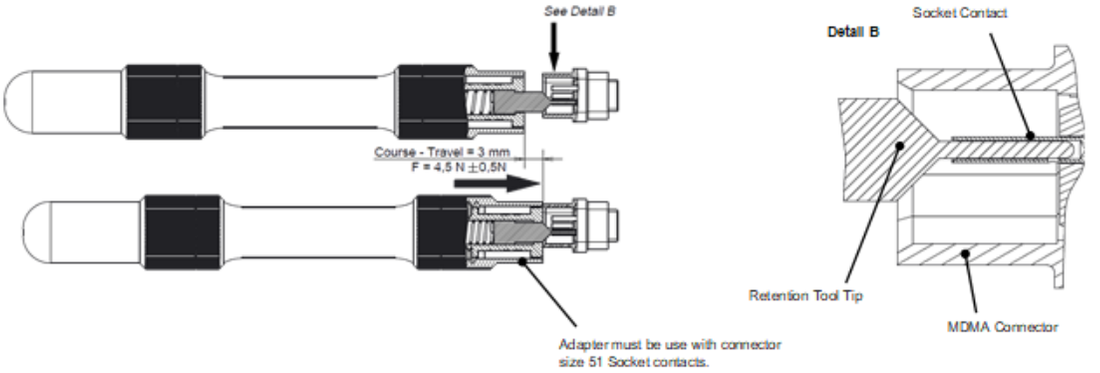

Insert the tip of the tool inside the Socket contact
Push the tool up to the stop with the front face of the connector
Pull back lightly on wire to be sure contact is locked securely

ACCESSORIES

INTERFACIAL SEAL	SIZE	ESA/ESCC DESCRIPTION	C&K P/N
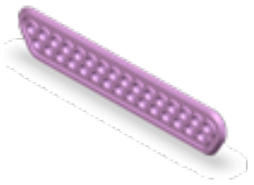	9S	340103212B	C115373-0050C
	15S	340103213B	C115373-0051C
	21S	340103214B	C115373-0052C
	25S	340103215B	C115373-0053C
	31S	340103216B	C115373-0054C
	37S	340103217B	C115373-0055C
	51S	340103219B	C115373-0056C
MALE SCREWLOCK		**ESA/ESCC DESCRIPTION**	**C&K P/N**
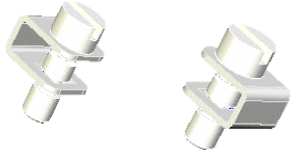		340103207B	C115366-9218
CRIMPING TOOL		**DESCRIPTION**	**C&K P/N**
		M22520/2-01	C995-0001-584
LOCATOR	**TYPE**	**DESCRIPTION**	**C&K P/N**
	Male contacts	MDMA-Locator-P-01	C115373-0001
	Female contacts	MDMA-Locator-S-01	C115373-0002
EXTRACTION TOOL	**TYPE**	**DESCRIPTION**	**C&K P/N**
	9 to 37	MDMA-Extract tool-01	C115373-0006
	51	MDMA-Extract tool-02	C115373-0007
TEST RETENTION TOOL		**DESCRIPTION**	**C&K P/N**
	Tool with Adapter size 51S	MDMA-Retention tool	C115373-0003
	Adapter for size 51S	MDMA-Retention tool adapt 51	C115373-0008
DUST CAP	**SIZE**	**DESCRIPTION**	**C&K P/N**
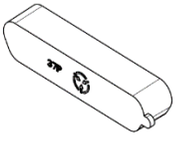	9P	MDM-DUSTCAP-9P-FR022	C115288-6927
	9S	MDM-DUSTCAP-9S-FR022	C115288-6928
	15P	MDM-DUSTCAP-15P-FR022	C115288-6929
	15S	MDM-DUSTCAP-15S-FR022	C115288-6930
	21P	MDM-DUSTCAP-21P-FR022	C115288-6931
	21S	MDM-DUSTCAP-21S-FR022	C115288-6932
	25P	MDM-DUSTCAP-25P-FR022	C115288-6933
	25S	MDM-DUSTCAP-25S-FR022	C115288-6934
	31P	MDM-DUSTCAP-31P-FR022	C115288-6935
	31S	MDM-DUSTCAP-31S-FR022	C115288-6936
	37P	MDM-DUSTCAP-37P-FR022	C115288-6937
	37S	MDM-DUSTCAP-37S-FR022	C115288-6938
	51P	MDM-DUSTCAP-51P-FR022	C115288-6939
	51S	MDM-DUSTCAP-51S-FR022	C115288-6940

For the complete range of accessories and details, consult our MDM accessories datasheet.

CONNECTORS DESCRIPTION AND C&K PART NUMBERS

SHELL	CONTACT TYPE	CONTACT #	ATTACHMENT OPTIONS					
			STANDARD CONNECTOR		CONNECTOR WITH CAPTIVE NUT (E)		CONNECTOR WITH FLOATING MOUNT (Y)	
			ESA/ESCC DESCRIPTION	C&K P/N	ESA/ESCC DESCRIPTION	C&K P/N	ESA/ESCC DESCRIPTION	C&K P/N
Nickel	Pin	9	340107701B MDMA9P-FO	C115373-2100C	340107701B MDMAE9P-FO	C115373-2124C	340107701B MDMAY9P-FO	C115373-2112C
		15	340107701B MDMA15P-FO	C115373-2102C	340107701B MDMAE15P-FO	C115373-2126C	340107701B MDMAY15P-FO	C115373-2114C
		21	340107701B MDMA21P-FO	C115373-2104C	340107701B MDMAE21P-FO	C115373-2128C	340107701B MDMAY21P-FO	C115373-2116C
		25	340107701B MDMA25P-FO	C115373-2106C	340107701B MDMAE25P-FO	C115373-2130C	340107701B MDMAY25P-FO	C115373-2118C
		31	340107701B MDMA31P-FO	C115373-2108C	340107701B MDMAE31P-FO	C115373-2132C	340107701B MDMAY31P-FO	C115373-2120C
		37	340107701B MDMA37P-FO	C115373-2110C	340107701B MDMAE37P-FO	C115373-2134C	340107701B MDMAY37P-FO	C115373-2122C
		51	340107701B MDMA51P-FO	C115373-2142C	340107701B MDMAE51P-FO	C115373-2146C	340107701B MDMAY51P-FO	C115373-2144C
	Socket	9	340107701B MDMA9S-FO	C115373-2101C	340107701B MDMAE9S-FO	C115373-2125C	340107701B MDMAY9S-FO	C115373-2113C
		15	340107701B MDMA15S-FO	C115373-2103C	340107701B MDMAE15S-FO	C115373-2127C	340107701B MDMAY15S-FO	C115373-2115C
		21	340107701B MDMA21S-FO	C115373-2105C	340107701B MDMAE21S-FO	C115373-2129C	340107701B MDMAY21S-FO	C115373-2117C
		25	340107701B MDMA25S-FO	C115373-2107C	340107701B MDMAE25S-FO	C115373-2131C	340107701B MDMAY25S-FO	C115373-2119C
		31	340107701B MDMA31S-FO	C115373-2109C	340107701B MDMAE31S-FO	C115373-2133C	340107701B MDMAY31S-FO	C115373-2121C
		37	340107701B MDMA37S-FO	C115373-2111C	340107701B MDMAE37S-FO	C115373-2135C	340107701B MDMAY37S-FO	C115373-2123C
		51	340107701B MDMA51S-FO	C115373-2143C	340107701B MDMAE51S-FO	C115373-2147C	340107701B MDMAY51S-FO	C115373-2145C
Gold	Pin	9	340107702B MDMA9P-FO	C115373-2150C	340107702B MDMAE9P-FO	C115373-2174C	340107702B MDMAY9P-FO	C115373-2162C
		15	340107702B MDMA15P-FO	C115373-2152C	340107702B MDMAE15P-FO	C115373-2176C	340107702B MDMAY15P-FO	C115373-2164C
		21	340107702B MDMA21P-FO	C115373-2154C	340107702B MDMAE21P-FO	C115373-2178C	340107702B MDMAY21P-FO	C115373-2166C
		25	340107702B MDMA25P-FO	C115373-2156C	340107702B MDMAE25P-FO	C115373-2180C	340107702B MDMAY25P-FO	C115373-2168C
		31	340107702B MDMA31P-FO	C115373-2158C	340107702B MDMAE31P-FO	C115373-2182C	340107702B MDMAY31P-FO	C115373-2170C
		37	340107702B MDMA37P-FO	C115373-2160C	340107702B MDMAE37P-FO	C115373-2184C	340107702B MDMAY37P-FO	C115373-2172C
		51	340107702B MDMA51P-FO	C115373-2192C	340107702B MDMAE51P-FO	C115373-2196C	340107702B MDMAY51P-FO	C115373-2194C
	Socket	9	340107702B MDMA9S-FO	C115373-2151C	340107702B MDMAE9S-FO	C115373-2175C	340107702B MDMAY9S-FO	C115373-2163C
		15	340107702B MDMA15S-FO	C115373-2153C	340107702B MDMAE15S-FO	C115373-2177C	340107702B MDMAY15S-FO	C115373-2165C
		21	340107702B MDMA21S-FO	C115373-2155C	340107702B MDMAE21S-FO	C115373-2179C	340107702B MDMAY21S-FO	C115373-2167C
		25	340107702B MDMA25S-FO	C115373-2157C	340107702B MDMAE25S-FO	C115373-2181C	340107702B MDMAY25S-FO	C115373-2169C
		31	340107702B MDMA31S-FO	C115373-2159C	340107702B MDMAE31S-FO	C115373-2183C	340107702B MDMAY31S-FO	C115373-2171C
		37	340107702B MDMA37S-FO	C115373-2161C	340107702B MDMAE37S-FO	C115373-2185C	340107702B MDMAY37S-FO	C115373-2173C
		51	340107702B MDMA51S-FO	C115373-2193C	340107702B MDMAE51S-FO	C115373-2197C	340107702B MDMAY51S-FO	C115373-2195C

CONTACTS DESCRIPTION AND C&K PART NUMBERS

USED FOR WIRE SIZE AWG	CONTACT TYPE	ESA/ESCC DESCRIPTION	C&K PART NUMBER
25 / 26 / 28	Pin	340107801B	C331-8752-000H
	Socket	340107802B	C252-8838-000H
24 / 25 / 26 / 28 / 2x28	Pin*	340107803B	C331-8754-000H
	Socket*	340107804B	C252-8844-000H

*To be preferred. Designed for all wires combination.

AMERICAS
Tel: +1.617.969.3700

ASIA
Tel: +852.3713.5288

EUROPE
Tel: +33.1.60.24.51.51