

MD (Soft Actuator)



MDP (Hard Actuator)

Features/Benefits

- Short travel
- Good tactile feedback
- Self cleaning
- ROHS
- 2 actuator material

Typical Applications

- Aircraft
- Instrument
- Panels
- Radio equipment

Specification

Function : Momentary action
Contact type : Normally Open - SPST
Terminals : Through hole PCB terminations

Mechanical

	Operating force (N)	Tactile feeling (Δ%)	Operating life	Travel (mm)
MD	2,4 N ± 25%	≥ 15%	≥ 10^6	0.95 mm ± 0.35
MDP	2,6 N ± 25%	≥ 25%	≥ 2x10^5	0.4 mm ± 0.25

Electrical

	Silver	Gold
Maximum power:	1,0 VA	0,2 VA
Maximum voltage:	100 Vdc	100 Vdc
Minimum voltage:	20 mVdc	20 mVdc
Min/max current:	1.0 mA – 100 mA	50 µA – 50 mA
Dielectric strength:	≥ 250 Vrms	
Contact resistance:	≤ 100 mΩ	
Insulation resistance: (between terminals)	Initial measurement: ≥ 1 GΩ After damp heat : ≥ 10 MΩ	
Bounce time:	≤ 3ms	

Environmental

	Silver	Gold
Operating temperature	- 25°C / + 70°C	- 55°C / + 85°C

Part Number Description
For any part number different from those listed below, please consult your local representative

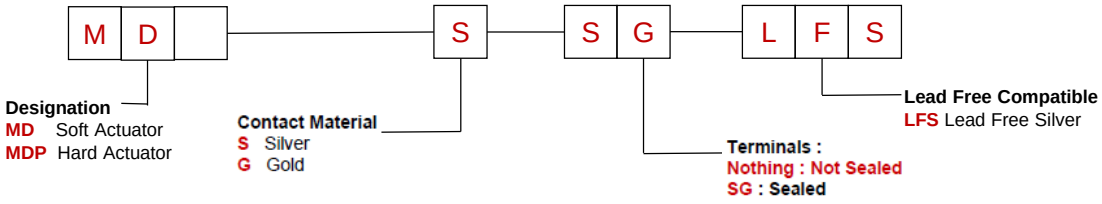

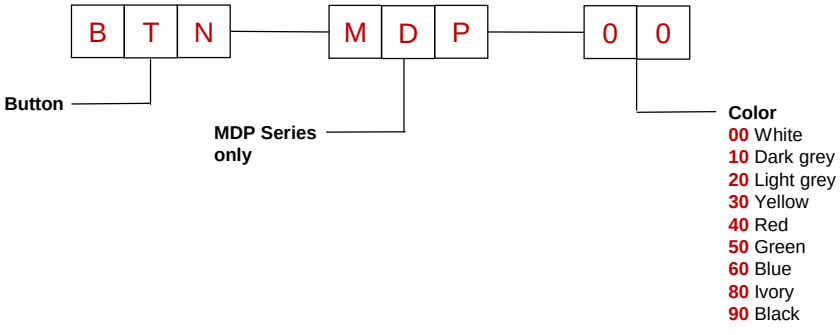

Dimensions shown in mm (inch)
Specifications and dimensions subject to change

MD

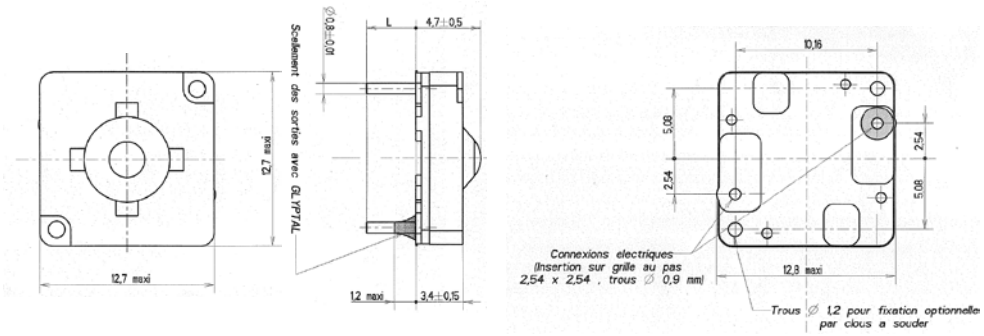

MDP

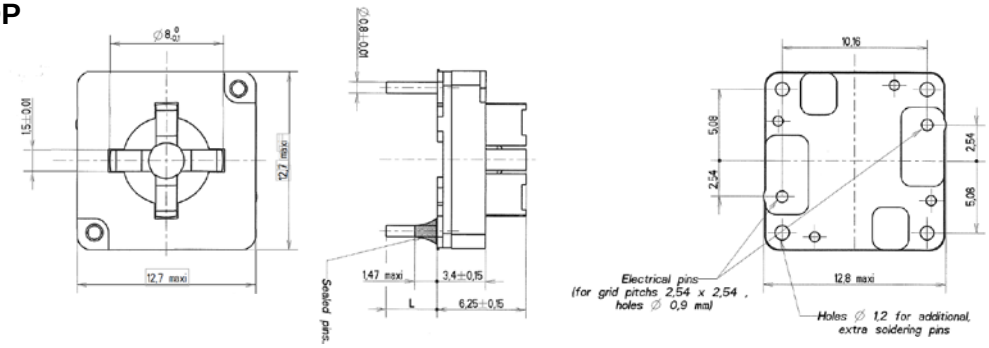

Bouton MDP

