THIS IS ISSUED IN STRICT CONFIDENCE THAT IT IS NOT USED AS A BASIS FOR MANUFACTURE OR SALE AND THAT IT IS NOT COPIED, REPRINTED OR DISCLOSED TO A THIRD PARTY EITHER WHOLLY OR IN PART WITHOUT THE PRIOR WRITTEN CONSENT OF CAL TEST ELECTRONICS, INC.

REVISIONS			
REV.	DESCRIPTIONS	DATE	APPROVED
–	CLASS A RELEASED	7/12/99	

1. INSULATED BNC MALE WITH 4mm SAFETY JACKS.
   APPLICATION: ADAPTS BNC FEMALE CONNECTOR TO 4mm SHEATHED JACKS TO ACCEPT SHEATH BANANA PLUGS. UPGRADES BNC TO IEC SPECIFICATIONS.

2. SPECIFICATIONS:
   INSULATOR: POLYAMIDE (NYLON), GREY
   JACK CONTACTS: BRASS, NICKEL PLATED
   BNC(m): BRASS. CENTER CONTACT, GOLD PLATED.

3. RATING:
   VOLTAGE: 500V CATI OR 150V CATIII P2 (IEC61010–1)
   CURRENT: 3A MAX.
   RESISTANCE: <0.8mΩ.
   TEMPERATURE: –20° C TO +80° C.

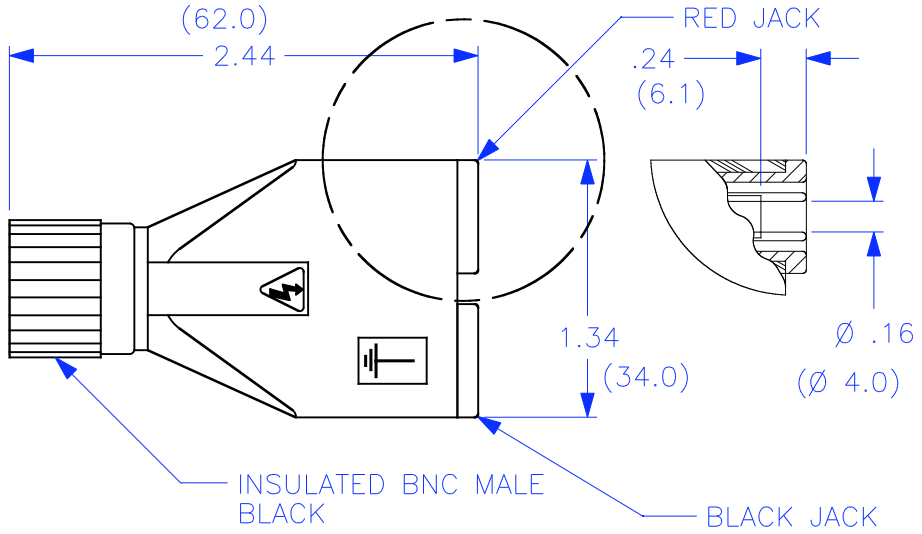

PART NUMBER

CT2412

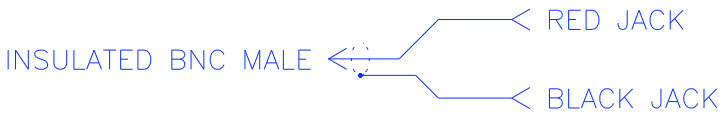

SCHEMATIC

THIRD ANGLE PROJECTION	UNLESS OTHERWISE SPECIFIED DIMENSIONS ARE IN INCHES TOLERANCES ARE: FRACTIONS ± 1/32 DECIMALS .XX ± .02 .XXX ±.005 DO NOT SCALE DRAWING	CONTRACT NO.	Cal Test Electronics 22820 Savi Ranch Parkway Yorba Linda, CA 92887-4610
	MATERIAL	APPROVALS / DATE	TITLE: INSULATED BNC(m) w/4mm SHEATHED SAFETY JACKS
	FINISH	DRAWN WDH 7/12/99	SIZE A · CAGE CODE 43F45 · DWG. NO. P241200 · REV. –
NEXT ASSY / USED ON		CHECKED	SCALE 1:1 · SHEET 1 OF 1
APPLICATION		ENGR.	
		DESIGN ACTIVITY	